(19) Europäisches Patentamt
European Patent Office
Office européen des brevets

(11) Publication number: **0 066 549**
A1

(12) # EUROPEAN PATENT APPLICATION

(21) Application number: 82830104.4

(51) Int. Cl.³: H 01 R 13/447

(22) Date of filing: 22.04.82

(30) Priority: 19.05.81 IT 2179381

(43) Date of publication of application:
08.12.82 Bulletin 82/49

(84) Designated Contracting States:
AT BE CH DE FR GB LI LU NL SE

(71) Applicant: SARNO S.p.A.
Via Crispi 96
Napoli(IT)

(72) Inventor: Ranzanigo, Pierluigi
Via Cave 68
Mompiano (Brescia)(IT)

(74) Representative: La Ciura, Salvatore
Via Francesco Sforza 5
I-20122 Milano(IT)

(54) **Casing for outlet access openings in multi pole heavy-duty electrical outlets boxes.**

(57) The invention concerns a casing for the outlet access opening in multi-pole heavy-duty electrical outlet boxes, equipped or not with mechanical interlock switches. This casing consists of an exterior frame, made in a polygonal plan, preferably square or rectangular, with a circular knob seat in the middle, equipped with hooks for a bayonet clutch which pass through the bottom of said seat to helical ribs on the outside of a component acting as a coupling, with hinges at one side of said structure permitting connection to the box so that it can be titled open the moment the plug is inserted.

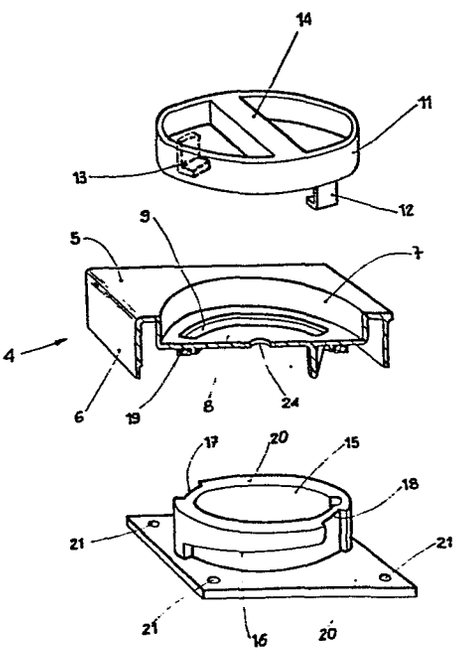

Fig. 2

EP 0 066 549 A1

Casing for outlet access openings in multi pole heavy-duty electrical outlets boxes

The object of the present invention is a casing for access couplings to outlets in multi-pole heavy-duty electrical outlet casings.

It is known that multi-pole heavy-duty electrical outlets, equipped or not with mechanical interlock switches, call for a box made of a container and a cover sealed together and with, at one end, a coupling facing an electrical outlet contained in the box itself. This coupling is sealed closed by a special closing device when the plug is not in the outlet to make sure the appliance is watertight against jets of water, as required by the relative regulations.

Known casings, designed to satisfy legal regulations, include a cover that makes a bayonet clamp on the coupling, and sealing on the edge of the coupling using a suitable seal. Since the bayonet clamp components are placed on the side wall of the cover; this must have a circular plant, and likewise for the coupling. This necessity

presents, first of all, the disadvantage that the cover cannot be hinged to the box, because hinges would prevent it from opening and closing. Consequently, when it is opened, the cover remains separate from the box, and must be placed in some other area. Often this leads to the cover's being lost, or at least a waste of time in searching for it and mounting it the moment the plug is removed. Another disadvantage comes from the fact that the circular shape required by the cover and the coupling often makes it difficult to joint the box or its cover, as long as the coupoing is circular, since it is impossible to give it a polygonal shape, preferably square or rectangular.

The present invention solves these problems, because, it proposes a casing that can have a square or rectangular plan, or take on any polygonal shape, and can be hinged to the box, while it still carries a bayonet closing system and the seal components required by regulations. The advantage is that the casing is always connected to the box, and must only be unscrewed and lifted away for the plug to be put in, and that it automatically re-lowers onto the coupling when theeplug is removed, so it can be tightened to seal.

The casing object of the invention is characterized by a frame that, on its outside, can take the shape of a polygonal plan; preferably square or rectangular, and carry hinges on one side that connect it to the box so it can be lifted and lowered with respect to the coupling facing the outlet. This framework has, in its center, a circular seat.

The bottom of this seat is equipped with two arched circular slots placed opposite each other, that the bayonet coupling hooks on a circular-plan knob that enters this seat go through. The frame also carries a third component that attaches to the box and that constitutes the coupling that the electrical outlet faces, and which externally carries the complementary mechanisms for bayonet tightening of the knob.

A seal is mounted on the outer face of the bottom of this seat, and presses against the edge of the coupling formed by the third component. This pressure is achieved by tightening the bayonet coupling.

The object of the invention, ad a non-limiting example of an embodiment, is illustrated in the enclosed drawings, where:

Figure 1 is a schematic isometric of a box containing a heavy-duty multi-pole electrical outlet, with or without mechanical interlock switch;
Figure 2 is an exploded drawing of the various components forming the casing object of the invention;
Figure 3 is section A-A on figure 1;
Figure 4 is section B-B on figure 1.

With reference to figure 1, a box for containing a heavy--duty electrical outlet, with or without mechanical interlock switch, includes part of bottom 1 that constitutes the actual box itself and a cover 2 that close box 1

along perfect-seal coupling line 3.

Knob 4', which does not relate to the present invention, and which is the control component for opening or closing a switch placed inside the box which applies or removes current from the electrical outlet, is situated on the top part of the cover.

The electrical outlet faces a coupling which is closed by casing 4 when the plug is removed, giving a seal to the plug opening as well, as called for by regulations. The object of the present invention is casing 4, which closes the coupling that the electrical outlet faces. With reference to figures 2, 3 and 4, the casing object of the present invention includes main frame 5, which can be shaped, in plan, in a polygon, and particularly in a square or rectangular, so that side walls 6 can follow the same shape in plan.

Frame 5, in its center, carries a circular plan seat 7 with two opposed circular slots 9 and 10 on uts bottom 8. Knob 11, also with a circular plan, is destined to be housed in seat 7 . Two hooks, 12 and 13, for the bayonet coupling, hang down from this knob in diametrically opposite positions. The knob is hollow at the top, and carries diameter bar 14 which serves to operate it.

Hooks 12 and 13 are designed to pass through slots 9 and 10 and place themselves below wall 8 of seat 7, as is better illustrated in figure 3.

Component 15 is placed below frame 5. This component contains a cylindrical cavity with a diameter slightly greater than that of the corrent outlet, and which constitutes the coupling the outlet itself faces. The external surface of this component has ribs which have at least one helical bottom edge 16, and which communicate with the edge of the cylindrical cavity by diametrically opposed vertical curts 17 and 18, forming complementary tightening components for hooks 12 and 13 of the bayonet clutch seal. Coupling, in fact, takes place by passing hooks 12 and 13 through slots 9 and 10 so that the hooks remain clamped on frame 5 and, when the cover must be closed on component 15, all that is necessary is to turn knob 11 so that hooks 12 and 13 are in correspondence with cuts 17 and 18, which hooks are then made to slide below these by turning the knob, so that hooks 12 and 13 engage with the helical edges 16, permitting tightening.

Seal ring 19 is located below bottom wall 8. The diameter of this ring is such that it presses against circular edge 20 of component 15, so as to create seal between the part of wall 8 inside groove 9 and the opening of component 15 itself.

Component 15 is completed by flat support 20, preferentially square in plan, equipped with holes 21 at its corners forplacement of screws which clamp said support 20 to sholder 22 presented by cover 2, and consisting of a perimetral wall that makes opening 23 through which the plug passes.

Knob 11 is fastened to frame 5 by a screw passing through central hole 24 in bottom 8 of seat 7. The screw extends upwards to engage with a threaded hole, consisting of bush 25 placed in the center of cross member 14 on knob 11, all as illustrated in figure 3.

As illustrated in figure 4, thanks to the option of being able to make side walls 6 of frame 5 straight, hinges can be placed at the two ends of one side, for example the top horizontal side, which permit the frame to be lifted and tilt up from the box without having to detach it, since the amount of tilt will be sufficient for placement of the plug in the outlet.

In the case of figure 4, at each side end of cover 2 of the box there are two pins 26, each of which is jointed with arched arm 27, whose other end is fastened, by screw 28, to bush 29 located inside frame 5. This arm is sprung by helical spring 30. The entire assembly is designed to lift the frame, together with the knob, up to totally free the zone around component 15 and permit the plug to be inserted in the electric outlet.

Note, from the above description, that the casing object of the present invention makes the bayonet tightening components independent of the external shape of the casing itself, so that this exterior can take whatever shape it desires in plan and as illustrated in the figures, and can couple directly to the upper and side walls of the box, constituting a co-planar extension of said walls.

In addition the possibility of having at least one side straight permits hinging this framework to the box so that it can be lifted up and the plug inserted, and when the plug is removed it will automatically close on the coupling the outlet faces, and to tighten the seal all that is necessary is to turn knob 11.

Naturally the invention is not limited to the embodiments described above and illustrated in the enclosed drawings, but also includes any additions or variants within the realm of an expert technician's possibilities.

Claims

1. Casing for access coupling to boxes containing heavy--duty multi-pole electrical outlets, of the type including a bottom component which consists of the box itself, and a cover which seals onto said box, as well as a coupling opening at one end of said box, which constitutes an opening for inserting and removing the plug which connects to the outlet, said coupling being sealed closed when said plug is removed, characterized by the fact that it consists of a supporting framework (5) with a peripheral shape in a polygonal plan, preferably square or rectangular, with lateral walls, (6) which follow the same shape, said framework carrying a middle cylindrical seat (7), whose bottom wall (8) carries opposed slots (9 and 10) shaped in an arc, by a knob (11) with a cylindrical plan, entering exactly into said circular seat (7),and which has two hooks (12 and 13) for a bayonet coupling tightening going through said slots (9 and 10) and reaching below the bottom wall of said seat (7), said knob being equipped with a middle cross member that gives a grip for operating it, as well as by a third component which has a middle cylindrical cavity with a diameter slightly superior to the diameter of the electrical outlet, and constituting the access coupling to said outlet, and an external lateral wall, also cylindrical, equipped with ribs with at least one helical side, for bayonet-coupling with the hooks (12 and 13), said component (15) being equipped with a base support that permits it to be attached to a shoulder on the box itself, and consisting of a wall (22)which forms

an opening through which there is access to the current oitlet, with everything designed in such a way that fastening and tightening the casing does not involve the framework (5) and so that when tightening has taken place a seal (19) placed below the bottom wall (8) is pressed against the edge (20) of said component (15).

2. Casing as per claim 1, characterized by the fact that the knob (11) is connected to the seat (7) by a screw or other elastic component which is inserted below said seat and goes through a central hole in this to engage with a threaded hole in a bush that is enbloc with said knob.

3. Casing as per claim 1, where there are hinge mechanisms, eventually with return spings, at the two ends of one straight side og framework, permitting the framework to tilt outwards and leave space for inserting the electrical plug, and so that when said plug is removed the framework lowers down onto the outlet access coupling and is ready to be tightened by operating the knob (11).

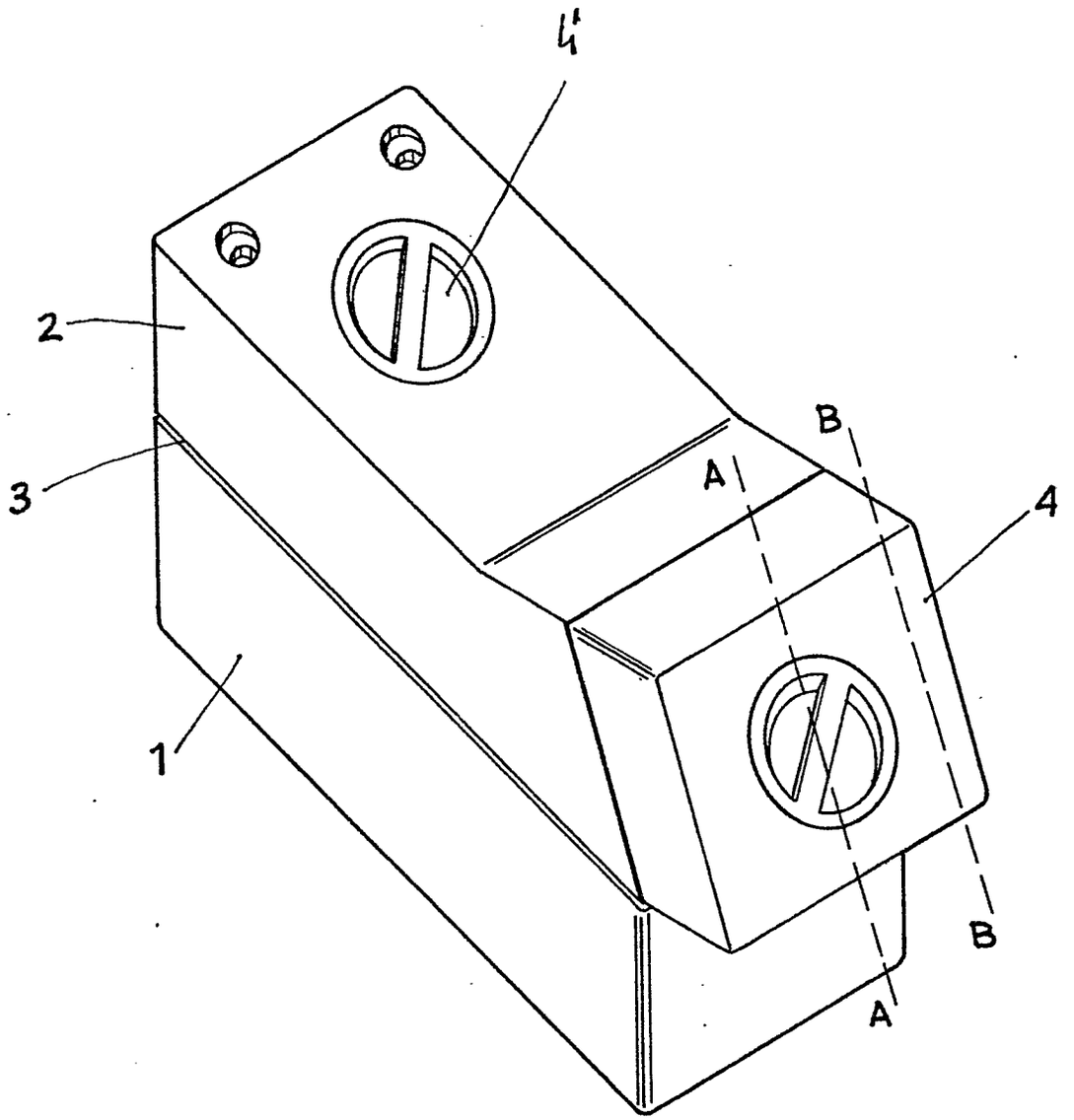

Fig. 1

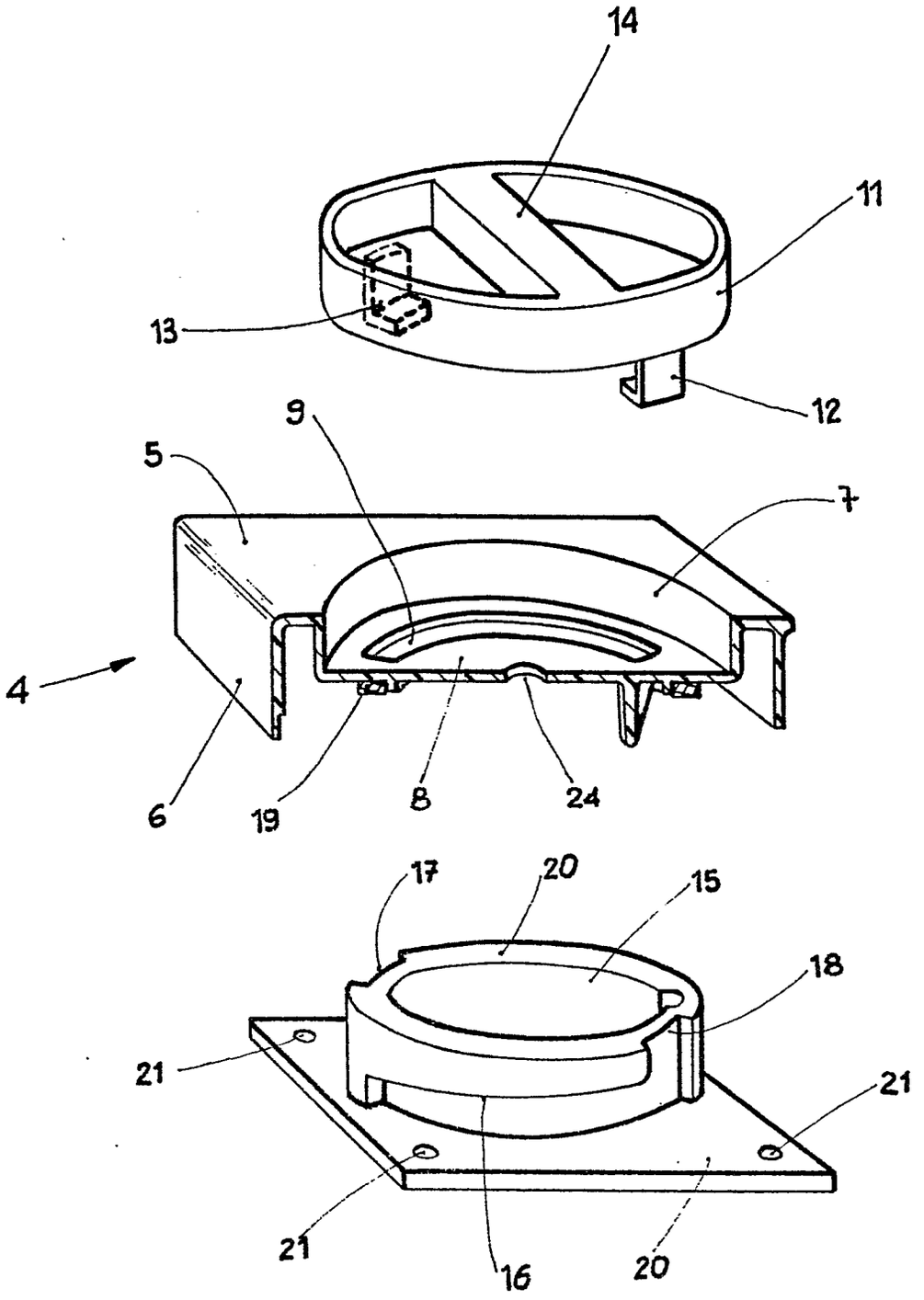

Fig. 2

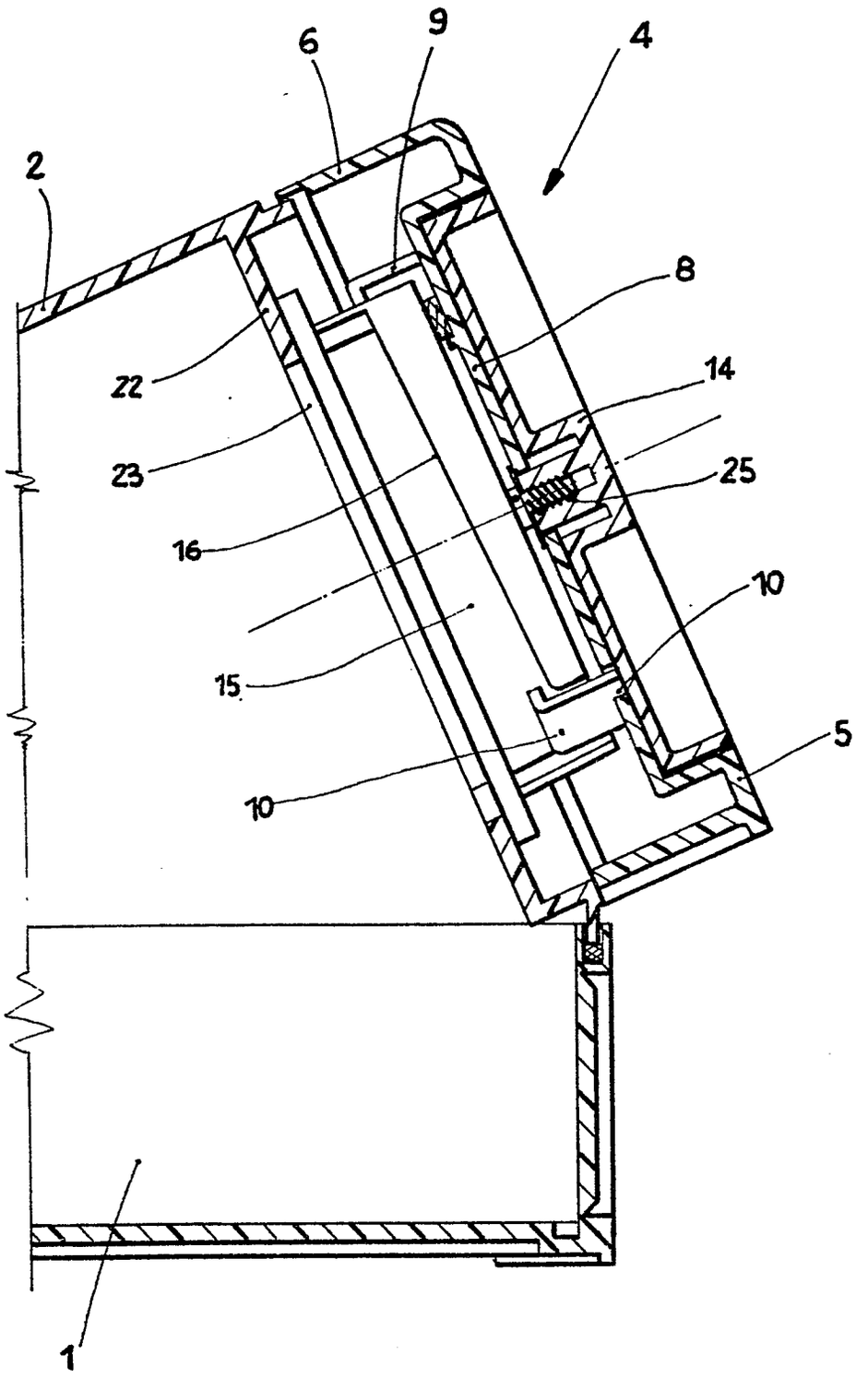

Fig. 3

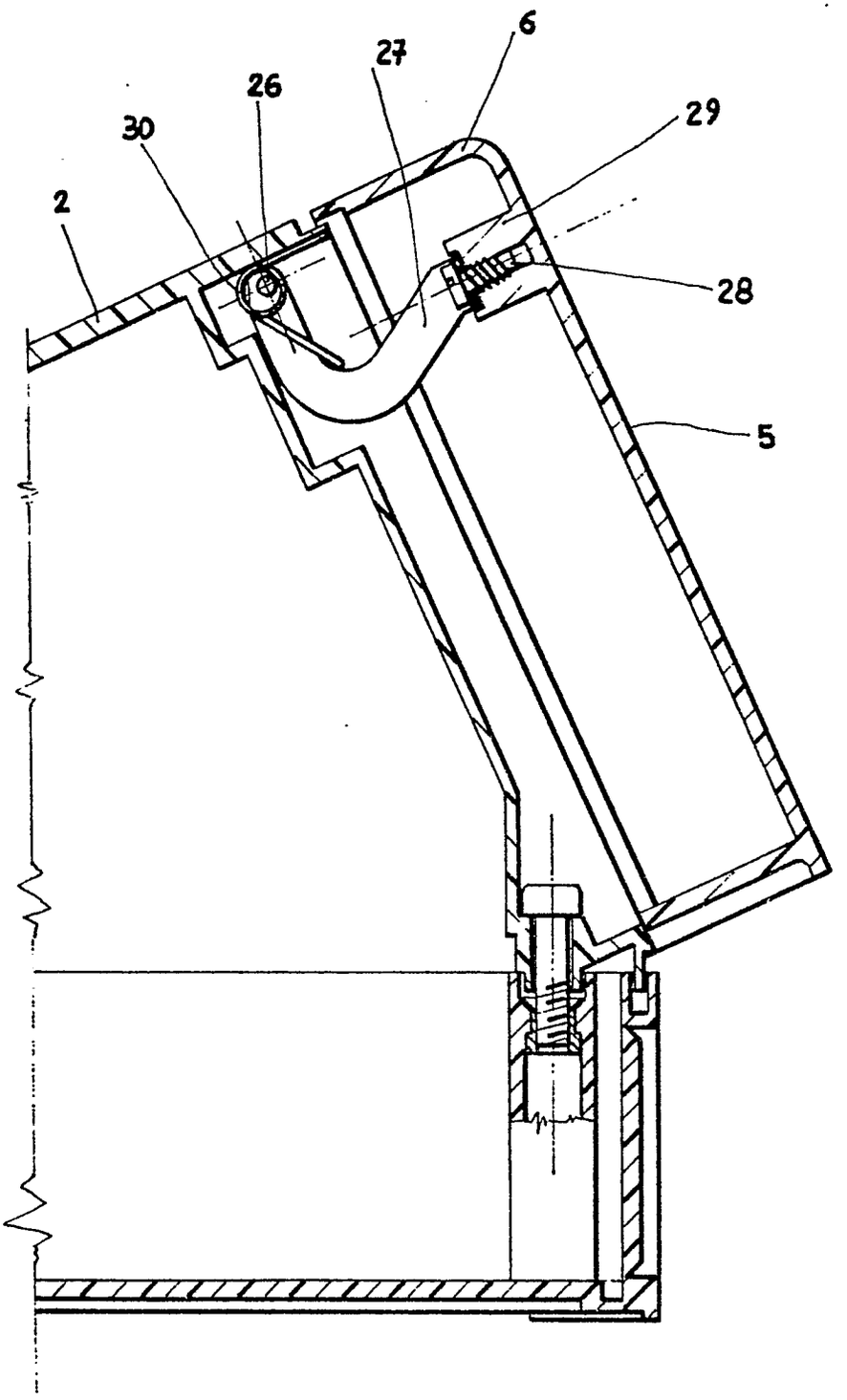

Fig. 4

European Patent Office

EUROPEAN SEARCH REPORT

Application number

EP 82 83 0104

DOCUMENTS CONSIDERED TO BE RELEVANT

Category	Citation of document with indication, where appropriate, of relevant passages	Relevant to claim	CLASSIFICATION OF THE APPLICATION (Int. Cl. ³)
Y	US-A-3 131 985 (BLONDER) * Column 2, lines 22-60; figures *	1,3	H 01 R 13/447
Y	ELEKTRO-TECHNIK, vol. 47, no. 31, 10th November 1965, page 692, Wurzburg, DE. "Explosionsgeschützte Abzweigkästen und -dosen" * Page 692 *	1,2	
A	FR-A-2 279 304 (F.A.E.A.M.) * Figures *	1	
A	DE-C- 685 793 (JORDAN) * Figures *	1	
A	DE-B-1 665 099 (MENNEKES) * Figures *	1,3	TECHNICAL FIELDS SEARCHED (Int. Cl. ³)

H 01 R 13
H 02 G 3
H 02 B 1
H 05 K 5
F 16 B 21

The present search report has been drawn up for all claims

Place of search	Date of completion of the search	Examiner
THE HAGUE	07-09-1982	RAMBOER P.

CATEGORY OF CITED DOCUMENTS

X : particularly relevant if taken alone
Y : particularly relevant if combined with another document of the same category
A : technological background
O : non-written disclosure
P : intermediate document

T : theory or principle underlying the invention
E : earlier patent document, but published on, or after the filing date
D : document cited in the application
L : document cited for other reasons

& : member of the same patent family, corresponding document

EPO Form 1503. 03.82