(19) Europäisches Patentamt
European Patent Office
Office européen des brevets

(11) Publication number: **0 115 365**
B1

(12) # EUROPEAN PATENT SPECIFICATION

(45) Date of publication of patent specification: **20.04.88**

(51) Int. Cl.[4]: **E 05 G 1/06**

(21) Application number: **84200079.6**

(22) Date of filing: **23.01.84**

(54) **Safe deposit locker installations.**

(30) Priority: **27.01.83 IT 1930183**

(43) Date of publication of application:
08.08.84 Bulletin 84/32

(45) Publication of the grant of the patent:
20.04.88 Bulletin 88/16

(84) Designated Contracting States:
AT BE CH DE FR GB IT LI LU NL SE

(56) References cited:
FR-A- 557 449
FR-A-2 523 198
US-A-3 893 740

(73) Proprietor: **LIPS VAGO SOCIETA PER AZIONI**
Strada Padana Superiore, 4
I-20063 Cernusco Sul Naviglio Milan (IT)

(72) Inventor: **Parisi, Corrado Marcello**
Via San Bernardino, 133
Bergamo (IT)
Inventor: **Peghetti, Ferruccio Giorgio**
Viale Assunta, 57
Cernusco Sul Naviglio Milan (IT)

(74) Representative: **Obee, Robert William**
Racal Group Services Ltd. Group Legal
Department Richmond Court 309 Fleet Road
Fleet, Hants. GU13 8BU (GB)

EP 0 115 365 B1

Note: Within nine months from the publication of the mention of the grant of the European patent, any person may give notice to the European Patent Office of opposition to the European patent granted. Notice of opposition shall be filed in a written reasoned statement. It shall not be deemed to have been filed until the opposition fee has been paid. (Art. 99(1) European patent convention).

Courier Press, Leamington Spa, England.

Description

The present invention relates to safe deposit locker installations.

Safe deposit lockers provide an excellent facility for individual renters to safeguard their valuables. The typical safe deposit installation comprises a rectangular array of individually-lockable compartments (ie lockers) located within a secure vault or strongroom. Usually, the door of each locker is equipped with a lock which requires two separate keys to open it. One key, (different for each locker), is issued to the respective renter, while the other key is held by the bank or other organisation which administers the installation. The latter key, which is generally termed the "custodian" key, may be the same for a group of lockers. The advantage of this dual-key operation is, of course, that in normal operation both the respective renter and a member of the custodian organisation must be present whenever a locker is unlocked. However, the greater measure of security against forcible entry to the lockers is provided not by the construction of the lockers themselves but by the construction of the vault or other secure area wherein the lockers are housed and to which access is normally strictly limited. If criminals are, by whatever means, able to gain access to the room where the lockers are housed then it is an easy matter, relatively speaking, to force open or penetrate the doors of typical safe deposit lockers.

It is an aim of the present invention to provide a safe deposit locker installation with increased security against forcible entry to the lockers, assuming that access to the locker room has been gained. More particularly the invention seeks to achieve increased security by providing additional elements to resist opening of the locker doors but without requiring changes in the construction of currently-produced lockers themselves, and which additional elements are of a nature to facilitate retro-fitting to existing installations. Preferably the use of such additional elements should not unduly complicate the legitimate opening of any safe deposit locker in an installation but at the same time they should offer protection against opening under duress in a "hold-up" situation; it is furthermore desirable that such additional elements can be arranged to release only a limited number of lockers for opening at any one time, while the remainder of the lockers remain protected.

US—A—3893740 discloses a multi-draw cabinet in which a vertical row of drawers can be locked by a bar hinged to the side of the cabinet and overlapping one side edge of the drawers, the bar including a lock for engagement with a keeper which is also mounted to the side of the cabinet. The side mounting of the hinge and locking components takes up a certain part of the width of the cabinet which cannot therefore be used for drawer-storage. The space requirement for these components to the side of the drawers also means that a system of this kind could not be retrofitted to a normal safe deposit locker installation where the adjacent vertical rows of lockers are butted together with no free space available between them for mounting additional hinges or locking means. Furthermore, by overlapping only one side edge of the drawers the locking bar in this arrangement only has to be wrenched sideways a small distance by a burglar in order to be able to open the drawers; the additional security which it provides is therefore not of a high order.

FR—A—557449 discloses a safe deposit cabinet which can be completely closed at the front by a hinged door. The door is hinged at one side and has bolts for engagement at the opposite side of the cabinet. Again the space required at the sides of the lockers for the door hinge and bolt detentions rules out the retrofitting of such a door to a normal safe deposit installation. Furthermore, the full width amoured door can be regarded as an excessively expensive solution to the problem of enhancing the security of the lockers.

Accordingly the present invention provides, in a safe deposit locker installation comprising an array of individual safe deposit lockers disposed in adjacent vertical rows, a respective vertical, penetration-resistant bar borne for movement relative to and externally of each said row of lockers, each such bar being of narrower width than the lockers in its respective row and arranged to be locked in place in a central position in front of that row so as to block the doors of the lockers in that row from opening and, when unlocked, to be displaceable from that position so as to permit the doors of the lockers in that row to be opened; and each said bar having associated with it bearing means for said movement and means for locking the bar to the array both located in spaces which are respectively above the uppermost locker and below the lowermost locker in the respective said row.

In such an arrangement the centrally-placed bar in front of each row of lockers can serve effectively to resist an attack upon the lockers either by forcing the bar itself aside or by forcing the lockers open from either side. At the same time it provides a more economic solution to the problem of protecting the lockers, in terms of the quantity of expensive high-strength and penetration-resistant material used, then a full-width door in front of each locker row. Furthermore these bars are not dependent for their mounting and locking upon the availability of space to the side of each row but rather make use of the spaces which are generally available above and/or below the rows.

In one arrangement the bars are borne for horizontal sliding movement immediately in front of the array of lockers. In another, the bars are borne for pivotal movement about respective vertical axes.

Preferably, the widths of said bars, (and where appropriate the geometry of their pivotal mountings) are so chosen in relation to the widths of the lockers which they protect that any one bar can be displaced from its locked position to unblock the

doors of the lockers in the respective row while the respective neighbouring bars remain in their locked positions. In this way it can be arranged that only a limited number of lockers in any array need to be unblocked for opening at any one time.

The respective bars may be locked in place e.g. by means of bolts which are thrown from the upper and lower edges of the bar into fixed detentions provided respectively above and below the uppermost and lowermost lockers in the protected row, with the bolts being selectively lockable in their thrown positions by means of a suitable locking mechanism housed in the bar. Whatever form the bar-locking means may take, in the normal arrangement where dual-dey operation of the individual lockers is involved it is preferred that the bars cannot be unlocked by a "custodian" key (but rather by the normal renter's keys appropriate to the protected row or by separate keys issued only to the renters), to avoid that bank staff or the like can unlock the bars is placed under duress in a "hold-up" situation, or that a stolen or copied "custodian" key can be used to release the bars.

Although we have spoken herein in terms of dual-key-operated lockers it is to be understood that either or both of the renters' and "custodian" locking mechanisms on a locker could instead be provided by or supplemented with a keyless combination locking mechanism or any other convenient kind of code recognition means.

These and other features of the invention will now be more particularly described, by way of example, with reference to the accompanying drawings, in which:

Figure 1 is a perspective view of part of a safe deposit locker installation equipped with locking bars in accordance with one embodiment of the invention;

Figure 2 is a vertical section through one of the locking bars of Figure 1;

Figure 3 is a perspective view of part of a safe deposit locker installation equipped with locking bars in accordance with another embodiment of the invention;

Figure 4 is a schematic plan view of part of the installation of Figure 3; and

Figure 5 is a vertical section through one of the locking bars of Figure 3.

With reference to Figure 1 there is seen part of a safe deposit locker installation including two rectangular arrays of lockers 1 disposed against adjacent walls inside a bank vault or the like secure room. The lockers themselves are of purely conventional construction, with outwardly-hinging doors 21 provided with dual-key operated locks 22. In each array the lockers are disposed in adjacent vertical rows, such as those designated R_1—R_{10} for one of the arrays in Figure 1.

Immediately in front of each locker array there are located a series of vertically-extending, horizontally-slidable, locking bars 2. As more clearly seen in Figure 2, each bar 2 is suspended at its upper end by pairs of rollers 3 (two pairs for each) which run in a track 4 fixed to a support member 5, the latter being rigidly mounted to the top of the locker array and (by means of struts 6 and 7) to the adjacent wall and ceiling of the vault. At its lower end the bar 2 is guided by two rollers 8 which run in a track 9 fixed to a plinth 10 which latter is rigidly mounted to the usual locker plinth 11 and to the floor of the vault. As seen in Figure 1 there is one bar 2 for each vertical locker row, and each bar can be locked in place in front of a respective row so as to block the doors of the lockers in that row from opening. To this end pairs of bolts 12 and 13 (Figure 2) can be thrown from the upper and lower ends of a lockcase 14 at the rear of each bar, into appropriately-spaced fixed detentions 15 and 16 welded into the top support member 5 and bottom plinth 10 respectively. These bolts are thrown and withdrawn by an external handle 17 provided on each bar (Figure 1) through a suitable mechanical transmission housed in the respective lockcase 14, of which many forms will suggest themselves to those skilled in the art and of which details are omitted in Figure 2. This boltwork can be selectively locked in the thrown condition by a respective lock provided in each bar 2 (of which the key entrances are indicated at 18 in Figure 1).

The front of each bar 2 is armoured to resist penetration by mechanical and thermal cutting tools. In a preferred embodiment this protection is provided by a slab 19 of security barrier material comprising a cast matrix of high thermal conductivity metal (eg aluminium) in which are embedded nuggets of very hard and refractory material (such as sintered or fused alumina), while the sides of the lockcase 14 behind this armoured layer may be protected, at least in the region of the lock, by plates of hardened steel.

It will be appreciated that so long as a bar 2 remains in place in front of its row of lockers 1 the doors of those lockers cannot be forced open and even if a locker door should be cut through around the sides of a bar the bar will impede removal of the locker's contents, particularly when full-width inner containers such as indicated at 20 in Figure 1 are used. To obtain legitimate access to any particular locker the bar 2 for the respective locker row is unlocked and slid sideways on the tracks 3 and 9 to lie clear of the corresponding row—as indicated for the bar of row R_5 in Figure 1—and the locker door 21 can then be unlocked and opened in the normal manner. In the illustrated embodiment the width of the bars 2 is slightly less than one third of the width of the individual lockers 1 so that, as shown a single bar 2 can be displaced (to either side from its blocking position to permit opening of the doors in its locker row, without requiring any displacement of the next adjacent bars. Only a strictly limited number of lockers (ie one vertical row) need therefore be unblocked at any one time in normal operation.

Turning now to Figures 3 and 4 there is seen part of another safe deposit locker installation including two rectangular arrays of lockers 101 disposed against adjacent walls inside a bank

vault or the like secure room. The lockers themselves are of purely conventional construction, with outwardly-hinging doors 102 provided with dual-operation locks 103 of a known type comprising a key-operated "custodian" mechanism plus a renters' mechanism released by turning a key and entering a specified combination on three dials 104. In each array the lockers are disposed in adjacent vertical rows, such as those designated R'_1—R'_{10} for one of the arrays in Figures 3.

By virtue of the protrusion of the lock dials 104 from the locker doors in this arrangement it is not readily practicable to equip this installation with sliding locking bars as described above with reference to Figures 1 and 2. Accordingly in this embodiment there are associated with each locker array a series of vertically-extending, hinged locking bars 105. Each bar is mounted at its upper and lower ends to transverse cantilever arms 106 which are in turn pivoted by pins 107 to fixed structure above and below the uppermost and lowermost lockers 101 in the array. More particularly, and as shown in Figure 5, the upper pivot pin 107 is borne in a block 108 welded to a mounting member 109 which is rigidly attached to the top of the locker array and (by means of struts 110) to the adjacent rear wall of the vault; attachment points may also be provided to the ceiling of the vault. The lower pivot pin 107 is borne in a block 111 welded to a plinth 112 which is rigidly attached to the usual locker plinth 113 and to the floor of the vault.

As seen in Figure 3 there is one bar 105 for each vertical locker row, and each bar can be locked in place in front of a respective row so as to block the doors of the lockers in that row from opening. To this end pairs of bolts 114 and 115 (Figure 5) can be thrown from the upper and lower ends of a lockcase 116 at the rear of each bar, into appropriately-spaced fixed detentions 117 and 118 provided in the blocks 108 and 111. As before, these bolts are thrown and withdrawn by an external handle 119 provided on each bar (Figure 3) through a suitable mechanical transmission housed in the respective lockcase 116, and this boltwork can be selectively locked in the thrown condition by a respective key lock provided in each bar 105 (of which the key entrances are indicated at 120 in Figure 3). Also as in the case of the previous embodiment, the front of each bar 105 is armoured to resist penetration by mechanical and thermal cutting tools, preferably by means of a slab 121 of security barrier material comprising a cast matrix of high thermal conductivity metal in which are embedded nuggets of very hard and refractory material, while the sides of the lockcase 116 behind this armoured layer may be protected, at least in the region of the lock, by hardened plates.

Once again it will be appreciated that so long as a bar 105 remains in place in front of its row of lockers 101 the doors of those lockers cannot be forced open and even if a locker door should be cut through around the sides of a bar the bar will impede removal of the locker's contents, particularly when full-width inner containers such as indicated at 122 in Figure 3 are used. To obtain legitimate access to any particular locker the bar 105 for the respective locker row is unlocked and swung outwardly away from the lockers to lie clear of the doors 102 of that row, and the chosen locker can then be unlocked and opened in the usual way. This is indicated for the bar of row R'_5 in Figure 3 and is indicated also in Figure 4 where the loci of opening movement of the illustrated bars are shown at 105' and the loci for the corresponding locker doors are shown at 102'. Figure 4 also shows that the "hand" of the hinges for the bar 105 in row R'_{10}—ie at the corner where the two locker arrays meet—is reversed as compared with the other rows R'_1—R'_9 in the same array to permit unobstructed opening of that bar. The geometry of the mountings of each bar 105 is arranged so that any one bar can be unlocked and swung away from its corresponding row of lockers without disturbing the neighbouring bars; only a strictly limited number of lockers (ie one vertical row) need therefore be unblocked at any one time in normal operation.

As previously indicated, it is desirable that the bars 2 or 105 in either of the above-described embodiments should not be capable of unlocking by a "custodian" key, to guard against loss in a "hold-up" situation or if a "custodian" key should become compromised. It is preferred that each bar 2/105 requires a different key to pass its own lock, and that the keys for this purpose are issued only to the renters of lockers in the corresponding vertical row. The keys for this purpose can be additional to the normal renters' keys or the bar lock and the individual locks 22/103 for each locker in the same row can be suited such that the normal renter's key for any locker in that row will also unlock the corresponding bar 2/105.

If desired, each bar 2 or 105 can embody a detector device to trigger an alarm in the event of an attack on the bar. In a simple form the detector may comprise a cord running in a narrow tube between the slab 19/121 and the external skin of the bar, and connected to a microswitch so that if the cord is cut, or slackened due to distortion of the bar, the alarm will be triggered by the switch.

Claims

1. A safe deposit locker installation comprising an array of individual safe deposit lockers (1; 101) disposed in adjacent vertical rows (R_1—R_{10}; R'_1—R'_{10}) and characterised by a respective vertical, penetration-resistant bar (2;105) borne for movement relative to and externally of each said row of lockers, each such bar being of narrower width than the lockers in its respective row and arranged to be locked in place in a central position in front of that row so as to block the doors (21;102) of the lockers in that row from opening and, when unlocked, to be displaceable from that position so as to permit the doors of the lockers in that row to be opened; and each said bar having associated with it bearing means (3,4,8,9;

106,107) for said movement and means (12,15,13,16;114,117,115,118) for locking the bar to the array both located in spaces which are respectively above the uppermost locker and below the lowermost locker in the respective said row.

2. An installation according to claim 1 wherein said bars (2) are borne for horizontal sliding movement immediately in front of the array of lockers (1).

3. An installation according to claim 2 wherein the widths of said bars (2) are so chosen in relation to the widths of the lockers (1) which they protect that any one bar can be displaced sideways from its locked position to unblock the doors of the lockers in the respective row (R_1—R_{10}) while the respective neighbouring bars remain in their locked positions.

4. An installation according to claim 1 wherein said bars (105) are borne for pivotal movement about respective vertical axes (107).

5. An installation according to claim 4 wherein the widths of said bars (105) and the geometry of their pivotal mountings (106,107) are so chosen in relation to the widths of the lockers (101) which they protect that any one bar can be swung away from its locked position to unblock the doors (102) of the lockers in the respective row (R'_1—R'_{10}) while the respective neighbouring bars remain in their locked positions.

6. An installation according to claim 4 or claim 5 wherein each said bar (105) is mounted by cantilever arms (106) to a respective pair of pivotal bearing means (107) which are located respectively above and below the uppermost and lowermost lockers (101) in the array and spaced laterally from the respective bar.

7. An installation according to any preceding claim wherein the individual lockers (1;101) in a said row (R_1—R_{10}; R'_1—R'_{10}) are equipped with dual-operation locks (22;103) which require recognition of both a respective "renter's" key or other code means and a "custodian" key or other code means to unlock, and the respective said bar (2;105) is equipped with a lock (18;120) which cannot be unlocked by said "custodian" key or other code means.

8. An installation according to claim 7 wherein the lock (18;120) of the respective said bar (2;105) can be unlocked by each "renter's" key or other code means of the individual lockers (1;101) in said row (R_1—R_{10}; R'_1—R'_{10}).

9. An installation according to claim 7 wherein the lock (18;120) of the respective said bar (2;105) can only be unlocked by a key or other code means different both from said "custodian" key or other code means and from each "renter's" key or other code means of the individual lockers (1;101) in said row (R_1—R_{10}; R'_1—R'_{10}).

10. An installation according to any preceding claim wherein each said bar (2;105) is adapted to be locked in place by means of bolts (12,13;114,115) thrown from the upper and lower edges of the bar into fixed detentions (15,16;117,118) provided respectively above and below the uppermost and lowermost lockers (1;101) in the protected row (R_1—R_{10}; R'_1—R'_{10}); and the bar houses a locking mechanism for selectively locking said bolts in their thrown positions.

11. An installation according to any preceding claim wherein each said bar (2;105) incorporates a penetration-resistant slab (19;121) comprising a cast matrix of high thermal conductivity metal in which are embedded particles of a very hard and refractory material.

Patentansprüche

1. Sicherheitsschliessfachvorrichtung mit einer Anordnung von Einzelsicherheitsschliessfächern (1;101) in benachbarten senkrechten Reichen (R_1—R_{10}; R_1'—R_{10}'), dadurch gekennzeichnet, dass ein zugehöriger senkrechter Balken (2;105) von hohem Eindringwiderstand zur Bewegungsführung relativ zu und ausserhalb von jeder dieser Schliessfächerreihen gelagert ist, wobei jeder solche Balken in seiner Breite schmaler als die Schliessfächer in seiner entsprechenden Reihe ist und in seiner Mittelstellung vor dieser Reihe zur Öffnungsblockierung der Türen (21;102) von Schliessfächern zur Verriegelung einrastbar angeordnet und bei Entriegelung aus dieser Stellung zur Öffnung der Schliessfächertüren dieser Reihe versetzbar ist, und zu jedem solchen Balken eine Lagerführungshilfe (3,4,8,9;106,107) für die besagte Bewegung und Führungshilfen (12,15,13,16;114,117,115,118) für die Einrastung des Balkens vor die Fächergruppe, die beide in Höhlungen jeweils oberhalb des obersten Schliessfaches und unterhalb des untersten Schliessfaches dieser zugehörigen Reihe ihren Platz haben, gehören.

2. Vorrichtung nach Anspruch 1, worin solche Balken (2) für waagerechte Schiebebewegung unmittelbar vor die Gruppe von Schliessfächern gleitgelagert sind.

3. Vorrichtung nach Anspruch 2, worin die Breite solcher Balken (2) derart in Bezug auf die Breite der zu schützenden Schliessfächer (1) gewählt ist, dass jeder einzelne Balken aus seiner eingerasteten Stellung seitwärts zur Entriegelung der Schliessfächertüren in der zugehörigen Reihe (R_1—R_{10}) unter Beibehaltung der Schliesstellung entsprechender benachbarter Balken versetzbar ist.

4. Vorrichtung nach Anspruch 1, worin solche Balken (105) um zugehörige vertikale Achsen (107) schwenkbar gelagert sind.

5. Vorrichtung nach Anspruch 4, worin die Breite solcher Balken (105) und die Geometrie ihrer Schwenklager (106,107) derart in Bezug auf die Breite der zu schützenden Schliessfächer (101) gewählt sind, dass jeder einzelne Balken aus seiner eingerasteten Stellung zur Entriegelung der Schliessfächertüren (102) in der Zugehörigen Reihe (R_1'—R_{10}') unter Beibehaltung der Schliesstellung entsprechender benachbarter Balken wegschwenkbar ist.

6. Vorrichtung nach Anspruch 4 oder 5, worin

jeder solche Balken mit Freiträgerarmen (106) an das zugehörige Paar Schwenklagervorrichtungen (107), deren Platz sich in der Reihe jeweils oberhalb des obersten und unterhalb des untersten Schliesfachs (101) und seitlich des zugehörigen Balkens befindet, angebracht ist.

7. Vorrichtung nach einem der vorhergehenden Ansprüche, worin die Einzelschliessfächer (1;101) in dieser Reihe (R_1—R_{10}; R_1'—R_{10}') mit Dualbetätigungs-Schlössern, die Doppelerkennnung sowohl eines entsprechenden "Mieterschlüssels" oder anderer Kodemittel als auch eines "Treuhänderschlüssels" oder anderer Kodemittel zur Öffnung erfordern, ausgestattet sind und der zugehorige solche Balken (2,105) mit einem von diesem "Treuhänderschlüssel" oder anderen Kodemittel nicht zu öffnenden Schloss (18;120) ausgestattet ist.

8. Vorrichtung nach Anspruch 7, worin das Schloss (18;120) des zugehörigen solchen Balkens (2;105) mit jedem "Mieterschlüssel" oder anderen Kodemittel der Einzelschliessfächer (1;101) solcher Reihen (R_1—R_{10}; R_1'—R_{10}') entriegelbar ist.

9. Vorrichtung nach Anspruch 7, worin das Schloss (18;120) des zugehörigne solchen Balkens (2;105) nur mit einem von sowohl besagtem "Treuhänderschlüssel" oder anderen Kodemittel also auch von jedem "Mieterschlüssel" oder anderen Kodemittel der Einzelschliessfächer (1;101) solcher Reihen (R_1—R_{10}; R_1'—R_{10}') verschiedenen Schlüssel entriegelbar ist.

10. Vorrichtung nach einem der Vorhergehenden Ansprüche, worin jeder solche Balken (2;105) in seiner Stellung mittels von den Ober- und Unterkanten des Balkens vorgeschobenen Bolzen (12,13,114,115) in feststehende Sperren (15,16;117,118), die jeweils oberhalb der obersten und unterhalb der untersten Schliessfächer (1;101) in der zu schützenden Reihe (R_1—R_{10}; R_1'—F_{10}') vorgesehen sind, einrastbar ist und worin der Balken einen Schliessmechanismus zum selektiven Einrasten besagter Bolzenhebel in ihrer vorgeschobenen Stellung birgt.

11. Vorrichtung nach einem der vorhergehenden Ansprüche, worin jeder Solcher Balken (2;105) eine Platte (19,121) von hohem Eindringwiderstand, bestehend aus einer gegossenen Matrix hochwärmeleitfähigen Metalls und darin eingebetteten Teilchen eines sehr harten und feuerfesten Materials, aufweist.

Revendications

1. Installation de coffres-forts comprenant un arrangement de coffres-forts individuels (1;101) disposés en colonnes verticales adjacentes (R_1—R_{10}; R'_1—R'_{10}) et caractérisée par une barre verticale respective (2;105) résistant à la pénétration et supportée afin qu'elle se déplace par rapport à la colonne de coffres-forts et à l'extérieur de chaque colonne, chaque barre ayant une largeur inférieure à celle des coffres de la colonne respective et étant destinée à être verrouillée en position centrale en avant de cette colonne afin qu'elle bloque les portes (21;102) des coffres de cette colonne et empêche leur ouverture, la barre, lorsqu'elle est déverrouillée, pouvant étre déplacée à partir de cette position afin qu'elle permette l'ouverture des portes des coffres de cette colonne, chaque barre comportant, en coopération avec elle, un dispositif de support (3,4,8,9;106,107) destiné à permettre son déplacement, et un dispositif (12,15,13,16;114,117,115,118) destiné à verrouiller la barre sur l'arrangement et placé à la fois dans les espaces délimités au-dessus du coffre supérieur et au-dessous du coffre inférieur de la colonne respective.

2. Installation selon la revendication 1, dans laquelle les barres (2) sont supportées afin qu'elles puissent coulisser horizontalement juste en avant de l'arrangement de coffres (1).

3. Installation selon la revendication 2, dans laquelle les largeurs des barres (2) sont choisies, par rapport aux largeurs des coffres (1) qu'elles protègent, de manière qu'une barre quelconque puisse être déplacée latéralement à partir de sa position verrouillée afin qu'elle débloque les portes des coffres de la colonne repective (R_1—R_{10}) alors que les barres voisines restent dans leur position verrouillée.

4. Installation selon la revendication 1, dans laquelle les barres (105) sont supportées afin qu'elles puissent pivoter autour d'axes verticaux respectifs (107).

5. Installation selon la revendication 4, dans laquelle les largeurs des barres (105) et la configuration géométrique de leurs dispositifs pivotants de montage (106,107) sont choisies, compte tenu des largeurs des coffres (101 qu'elles protègent, de manière qu'une barre quelconque puisse être écartée de sa position de verrouillage par pivotement et débloque les portes (102) des coffres de la colonne respective (R'_1—R'_{10}) alors que les barres voisines respectives restent dans leur position verrouillée.

6. Installation selon l'une des revendications 4 et 5, dans laquelle chaque barre (105) est montée, par des bras en porté-à-faux (106), sur une paire respective de dispositifs pivotants (107) de support qui sont placés respectivement au-dessus du coffre supérieur et au-dessous du coffre inférieur (101) de l'arrangement et latéralement à une certaine distance de la barre respective.

7. Installation selon l'une quelconque des revendications précédentes, dans laquelle les coffres individuels (1;101) de la colonne (R_1—R_{10}; R'_1—R'_{10}) comportent des serrures (22; 103) à double manoeuvre qui nécessitent la reconnaissance à la fois d'une clé ou d'un autre dispositif codé d'un locataire respectif et d'une clé ou d'un autre dispositif codé d'un gardien avant déverrouillage, et la barre respective (2; 105) est équipée d'une serrure (18;120) qui ne peut pas être déverrouillée par la clé ou un autre dispositif codé du gardien.

8. Installation selon la revendication 7, dans laquelle la serrure (18;120) de la barre respective (2;105) peut être déverrouillée par chaque clé ou

autre dispositif codé de locataire des coffres individuels (1;101) de la colonne (R_1—R_{10}; R'_1—R'_{10}).

9. Installation selon la revendication 7, dans laquelle la serrure (18; 120) de la barre respective (2;105) ne peut être déverrouillée que par une clé ou un autre dispositif codé différent de la clé ou d'un autre dispositif codé du gardien et de la clé ou d'un autre dispositif codé de chaque locataire des coffres individuels (1;101) de la colonne (R_1—R_{10}; R'_1—R'_{10}).

10. Installation selon l'une quelconque des revendications précédentes, dans laquelle chaque barre (2;105) est destinée à être verrouillée sur place par des pênes (12,13;114,115) déplacés à partir des bords supérieur et inférieur de la barre dans des dispositifs fixes d'arrêt (15,16;117,118) placés respectivement au-dessus et au dessous du coffre supérieur et du coffre inférieur (1;101) de la colonne protégée (R_1—R_{10}; R'_1—R'_{10}), et la barre loge un mécanisme de verrouillage destiné à verrouiller sélectivement les pênes dans leur position sortie.

11. Installation selon l'une quelconque des revendications précédentes, dans laquelle chaque barre (2;105) comporte une plaque (19;121) qui résiste à la pénétration et qui comprend un liant métallique moulé possédant une conductibilité thermique élevée et dans lequel sont enrobées des particules d'un matériau très dur et réfractaire.

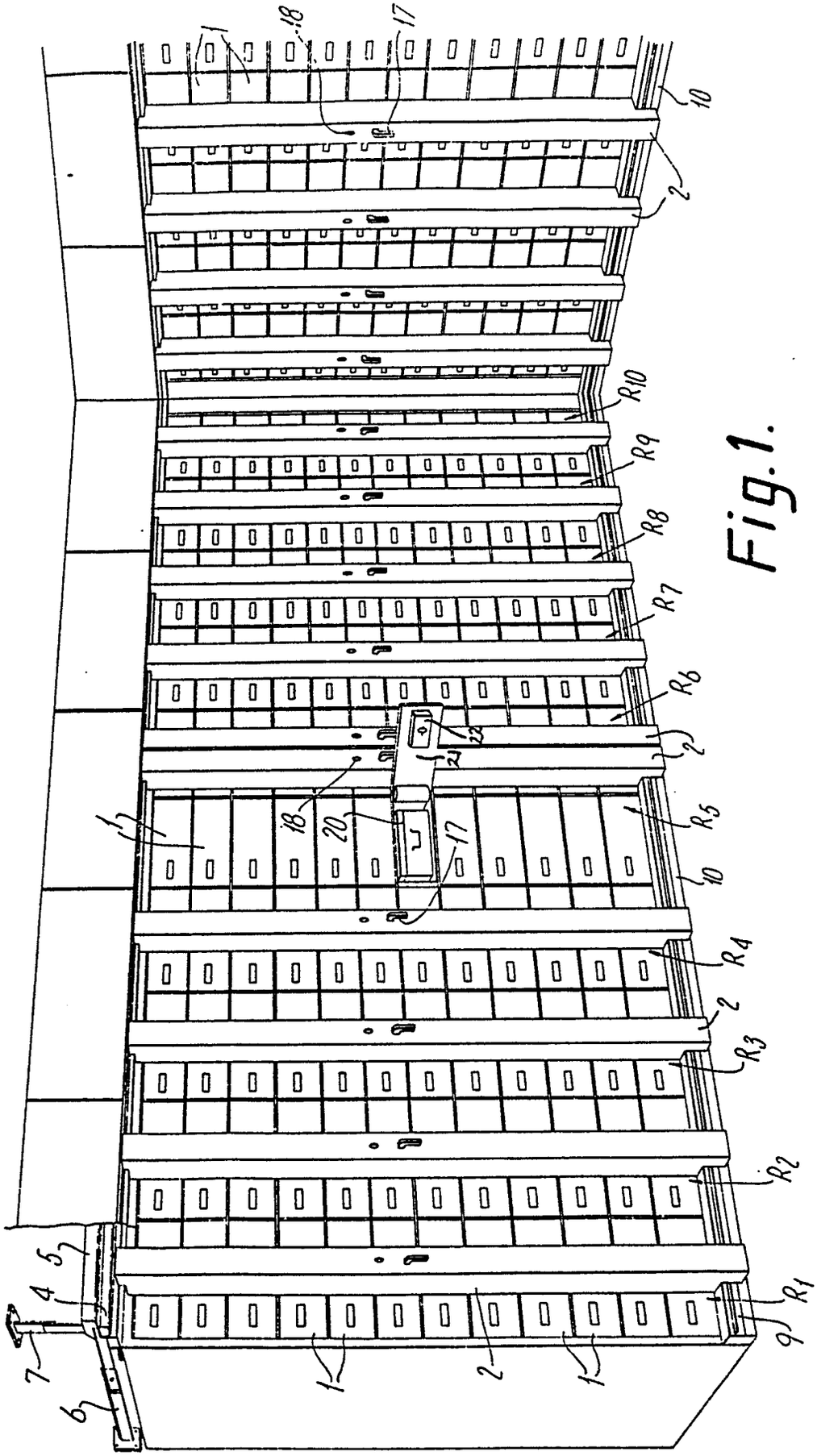

Fig. 1.

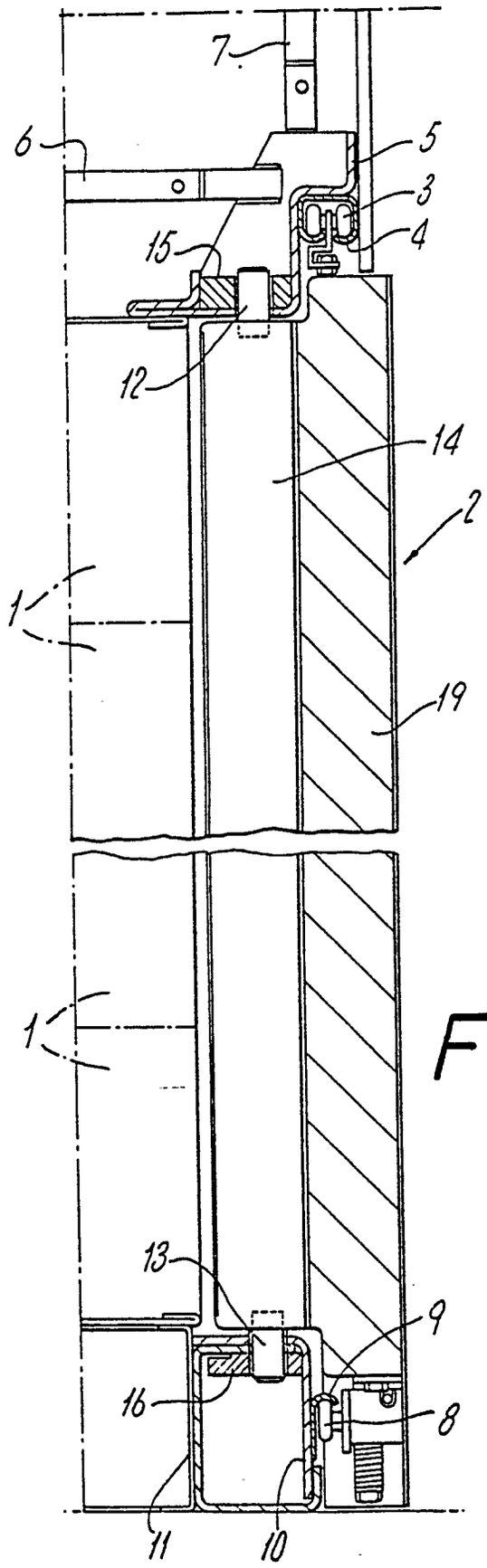

Fig. 2.

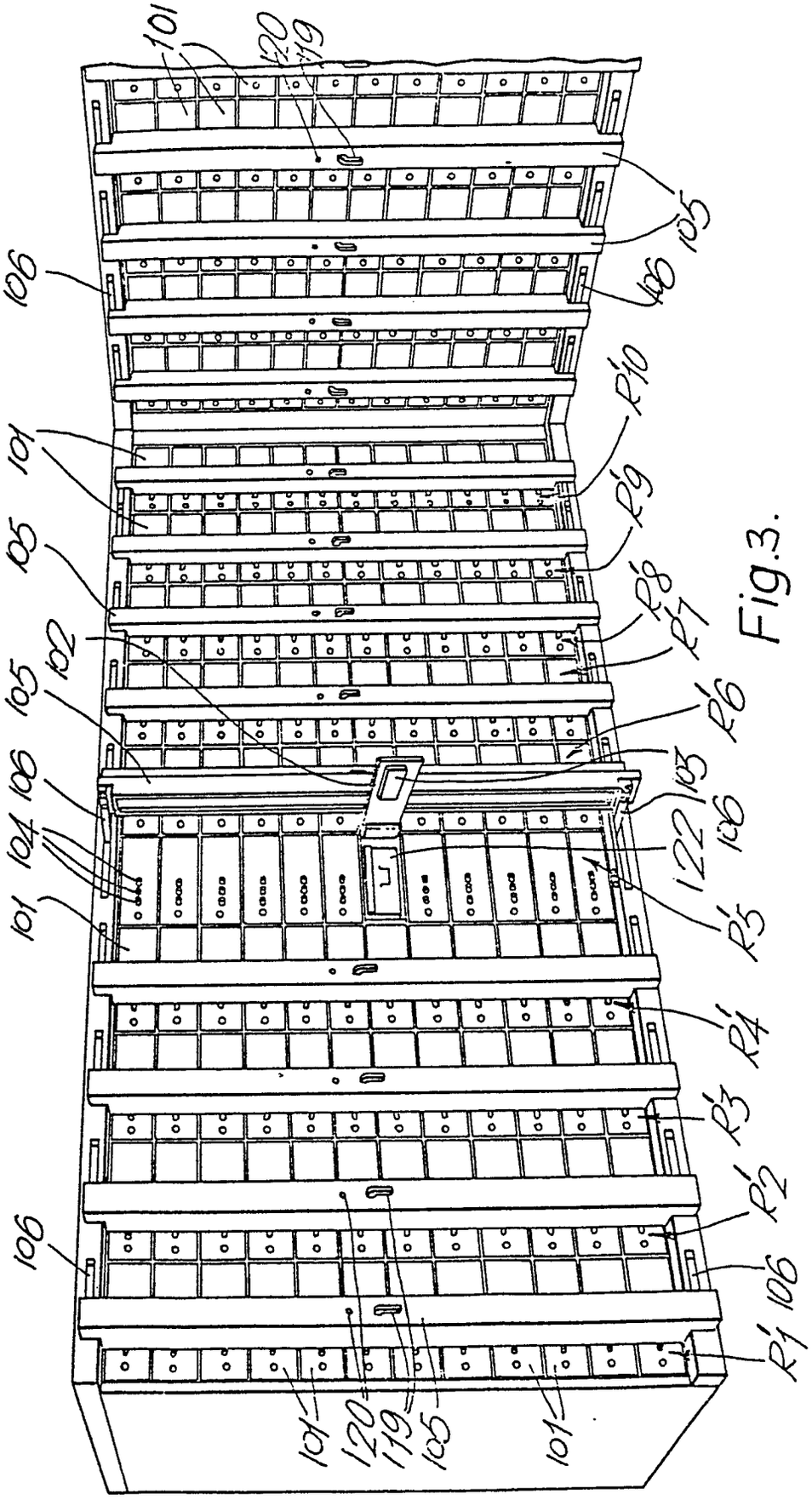
101
120
119
105
106
106
105
101
R'10
R'9
R'8
R'7
R'6
105
102
105
106
104
101
122
106
R'5
R'4
R'3
R'2
106
R'1
101
120
119
105
101

Fig.3.

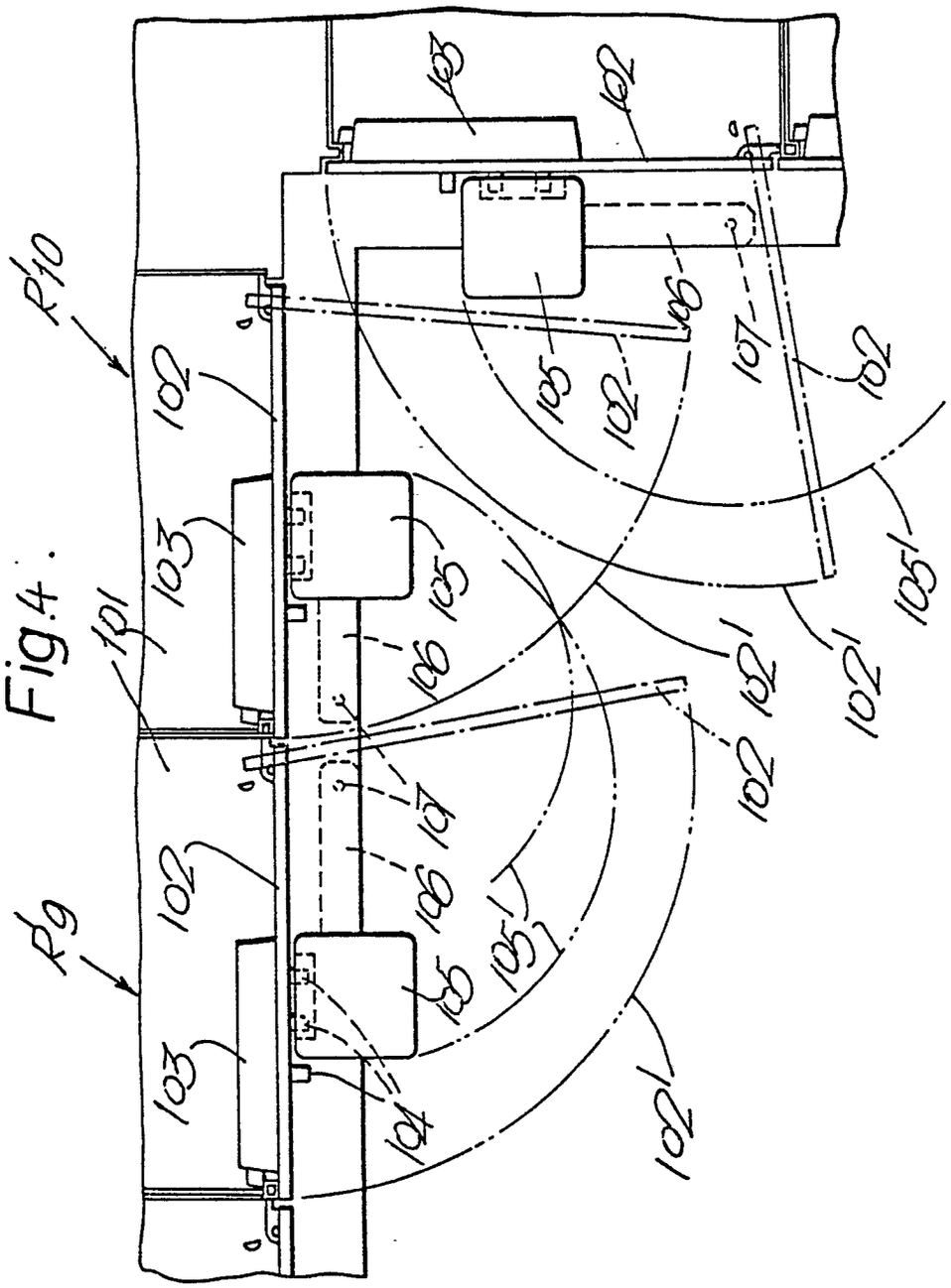

Fig.4.

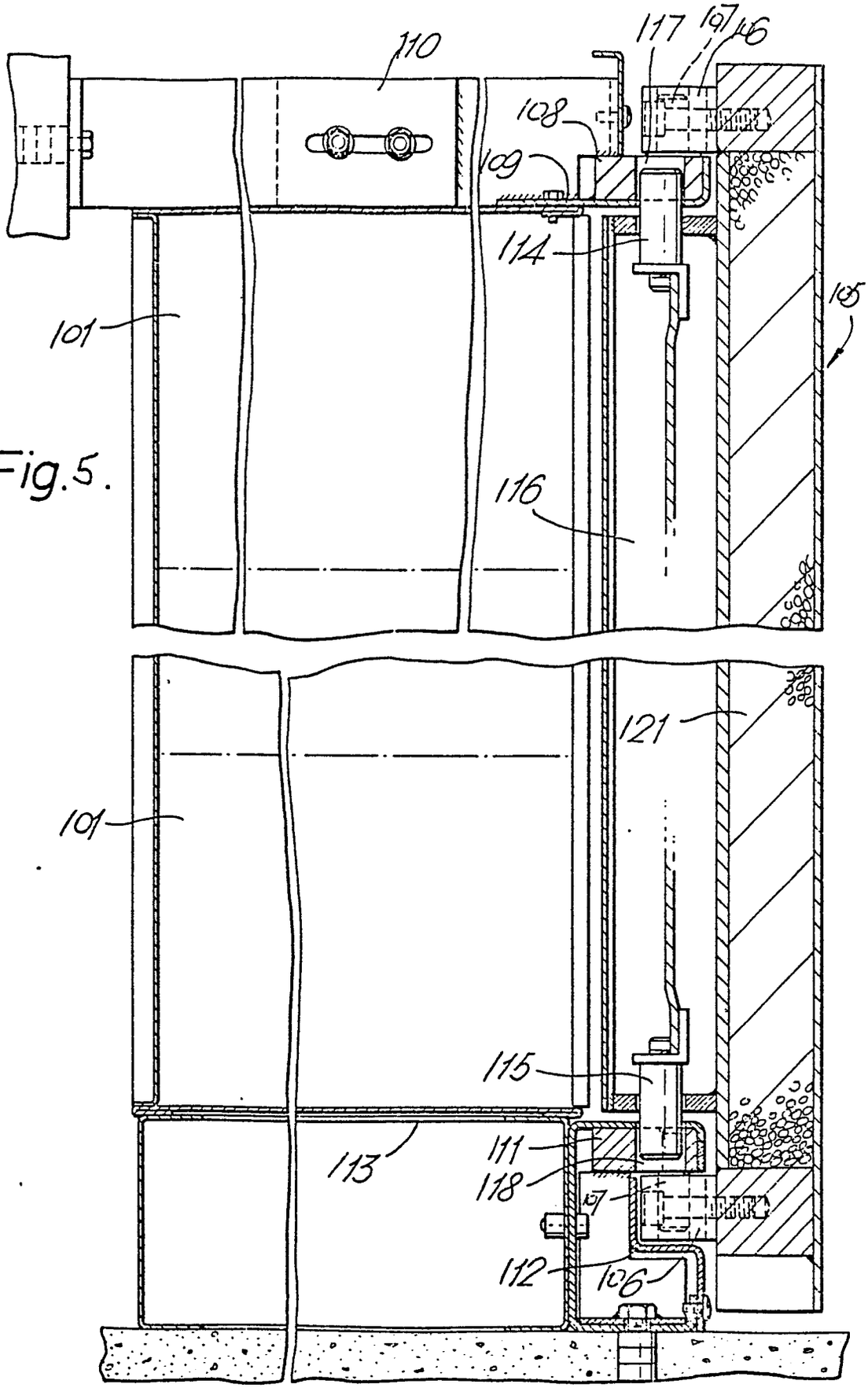
110
117
107
106
108
109
114
105
101
116
121
101
115
113
111
118
107
112
106

Fig.5.