(19) Europäisches Patentamt
European Patent Office
Office européen des brevets

(11) Publication number: **0 156 264**
B1

(12) **EUROPEAN PATENT SPECIFICATION**

(45) Date of publication of patent specification: **05.09.90**

(51) Int. Cl.[5]: **E 21 B 10/46**

(21) Application number: **85103002.3**

(22) Date of filing: **15.03.85**

(54) **Multi-component cutting element using triangular, rectangular and higher order polyhedral-shaped polycrystalline diamond disks.**

(30) Priority: **26.03.84 US 593102**

(43) Date of publication of application:
02.10.85 Bulletin 85/40

(45) Publication of the grant of the patent:
05.09.90 Bulletin 90/36

(84) Designated Contracting States:
BE DE FR GB NL

(56) References cited:
EP-A-0 127 077
DE-A-2 013 198
GB-A- 576 757
GB-A-2 081 347
US-A-1 522 593
US-A-3 902 864
US-A-4 190 126
US-A-4 244 432
US-A-4 299 297
US-A-4 452 325

(73) Proprietor: **Eastman Christensen Company**
1937 South 300 West
Salt Lake City Utah 84115 (US)

(72) Inventor: **Meskin, Alexander K.**
2955 Morningside Drive
Salt Lake City Utah 84117 (US)
Inventor: **Merrill, Leo**
338 South 700 East Orem
Utah 84057 (US)
Inventor: **Pay, Clifford R.**
2056 South 775 West Woods Cross
Utah 84087 (US)

(74) Representative: **Busse & Busse Patentanwälte**
Postfach 1226 Grosshandelsring 6
D-4500 Osnabrück (DE)

Courier Press, Leamington Spa, England.

EP 0 156 264 B1

Description

The present invention relates a cutter for mounting to a rotary drill bit of the kind referred to in the prescribing clause of claim 1.

Rotating diamond drill bits were initially manufactured with natural diamonds of industrial quality. The diamonds were square, round or of irregular shape and fully embedded in a metallic bit body, which was generally fabricated by powder metallurgical techniques. Typically, the natural diamonds were of a small size ranging from various grades of grit to larger sizes where natural diamonds of 5 or 6 stones per carat were fully embedded in the metal matrix. Because of the small size of the natural diamonds, it was necessary to fully embed the diamonds within the matrix in order to retain them on the bit face under the tremendous pressures and forces to which a drill bit is subjected during rock drilling.

Further, an enlarged cutter for use in a rotary percussion bit is known (US—A—4 299 297) comprising a plurality of raised sections containing a plurality each of cutting elements made of carbide alloy and being discretely embedded in a filler material to approximately one half of their height. In a similar cutter (US—A—3 902 864) boron fibres as hard cutting elements are used discretely embedded in sponge iron and then compressed and heated to form various enlarged cutters. Again, such cutters are characterized by low temperature stability and a cutting face only comprising individual cutting elements arranged in a spaced-apart pattern and in no way acting together.

Later, the commercial production of synthetically produced diamond grit and polycrystalline stones became a reality. For example, synthetic diamond was sintered into larger disk shapes and were formed as metal compacts, typically forming an amalgam of polycrystalline sintered diamond and cobalt carbine. Such diamond tables are commercially manufactured by General Electric Company under the trademark STRATAPAX. The diamond tables are bonded, usually within a diamond press to a cobalt carbide slug and sold as an integral slug cutter. The slug cutters are then attached by the drill bit manufacturers to a tungsten carbide slug which is fixed within a drill bit body according to the design of the bit manufacturer (GB—A—2 081 347).

However, such prior art polycrystalline diamond (PCD) compact cutting slugs are characterised by a low temperature stability. Therefore, their direct incorporation into an infiltrated matrix bit body is not practical or possible at this time.

In an attempt to manufacture diamond cutting elements of improved hardness, abrasion resistance and temperature stability, prior art diamond synthesizers have developed a polycrystalline sintered diamond element from which the metallic interstitial components, typically cobalt, carbide and the like, have been leached or otherwise removed. Such leached polycrystalline synthetic diamond is manufactured by the General Electric Company under the trademark GEOSET, for example 2102 GEOSETS, which are formed in the shape of an equilateral prismatic triangle 4 mm on a side and 2.6 mm deep (3 per carat), and as a 2103 GEOSET shaped in the form of an equilateral triangular prismatic element 6 mm on a side and 3.7 mm deep (1 per carat). However, due to present fabrication techniques, in order to leach the synthetic sintered PCD and achieve the improved temperature stability, it is necessary that these diamond elements be limited in size. Therefore, whereas the diamond compact slug cutters, STRATAPAX, may be formed in the shape of circular disks of 3/8" (9.5 mm) to 1/2" (12.7 mm) in diameter, the leached triangular prismatic diamonds, GEOSETS, have maximum dimensions of 4 mm to 6 mm. It is well established that the cutting rate of a diamond rotating bit is substantially improved by the size of the exposed diamond element available for useful cutting. Therefore, according to the prior art, the increased temperature stability of leached diamond products has been achieved only at the sacrifice of the size of the diamond elements and therefore the amount of diamond available in a bit design for useful cutting action.

It is an object of the invention to provide a thermally stable enlarged diamond cutter for use in drill bits having cutting surface of enlarged size and improved wear properties.

Persuant to the invention, this object is accomplished by a cutter as claimed in claim 1. With regard to further embodiments, reference is made to claims 2 to 5.

By arranging PCD cutting elements in a compact array wherein each cutting element is immediately proximate to at least one adjacent cutting element with no matrix intermediate the exposed diamond material of said cutting elements simulates a unitary diamond table of an enlarged size and provides a thermally stable cutter performing well in terms of length of bit life and rate of penetration due to an optimized diamond concentration within its cutting surface.

The invention and its various embodiments can best be understood by considering the following figures of the drawing wherein like elements are referenced by like numerals.

Figure 1 is a diagrammatic perspective view of a first embodiment incorporating a triangular PCD cutting element.

Figure 2 is a perpective view of a second embodiment of the invention incorporating a triangular cutting element.

Figure 3 is a plan view of a third embodiment of the invention incorporating a triangular cutting element.

Figure 4 is a perspective view of a fourth embodiment of the invention incorporating a rectangular cutting element.

Figure 5 is a diagrammatic perspective view of the fifth embodiment of the invention incorporating a higher order polyhedral shaped diamond element.

The invention is an enlarged diamond cutter in

a rotating bit comprised of a plurality of synthetic polycrystalline diamond elements. The diamond elements are bonded or embedded in a cutting slug formed of matrix material. The matrix material further incorporates diamond grit so that the arrayed PCD elements, each of which have exposed surfaces on the cutting face of the cutting slug, together with the diamond impregnated matrix material therebetween simulates an integral enlarged diamond table. However, the composite diamond table made from the these components in turn is characterised by the physical, temperature and wear characteristics of the smaller components which may be chosen from leached diamond product. Therefore, diamond cutters having the geometric size and design configuration of the traditionally larger unleached diamond compacts can be fabricated using a multiple component array of leached diamond elements according to the invention. The invention is better understood by first considering the embodiment in Figure 1.

Turn now to Figure 1 wherein a diamond cutter, generally denoted by reference numeral 10, is diagrammatically depicted in perspective view as forming the diamond table for an infiltrated integral matrix tooth, also generally denoted by reference numeral 12. Diamond cutter 10 is comprised of a plurality of synthetic PCD elements 14. In the illustrated embodiment, diamond elements 14 are triangular prismatic elements such as are sold by General Electric Company under the trademarks 2102 GEOSET and 2103 GEOSET. This material is leached diamond material which exerts greater temperature stability and improved wear characteristics than unleached diamond material, such as sold by General Electric Company under the trademark STRATAPAX.

Diamond elements 14 are arranged and grouped in an array which collectively comprises diamond cutter 10. In the case of Figure 1, wherein diamond elements 14 are equilateral triangular prismatic elements, four such elements can be arranged to collectively form a larger equilaterial triangular prismatic shape. For example, in the case where 2103 GEOSETs are used as diamond elements 14, four such elements can be combined to form an equilateral prismatic triangular shape having a side of 12 mm, and not 6 mm as in the case of a 2103 GEOSET. Clearly, the number of PCD elements 14 can be increased to construct even larger triangular arrays than that depicted in Figure 1.

The triangular array formed by diamond cutter 10 contemplates a compact array of diamond elements 14 wherein each diamond element is in contact with, or in the immediate proximity of, at least one adjacent diamond element 14. In the illustrated embodiment, each diamond element 14 disposed in a compact array actually touch each other or being immediately proximate to the adjacent cutting element with no matrix material intermediate.

Matrix material 16 as shown in Figure 5, for example, gennerally constituted of tungsten carbide and such other elements and compounds as are well known in the art in powder metallurgy for inclusion in such metallic matrices, includes diamond grit dispersed at least in that portion of matrix material 16 in the proximity of the cutting face of diamond cutter 10. The mesh or grit size of the natural or synthetic diamond incorporated then matrix material 16 may be of any magnitude or range according to the granularity and wear resistance properties ultimately desired as dictated by well known principles. Generally, a grit diameter in the range of 0.01 inch (0.254 mm) to 0.05 inch (1.27 mm) suffices. Generally, a diamond grit concentration uniformly dispersed through matrix material 16 of 50% to 100% by volume is utilized.

Turn now to Figure 2, wherein the second embodiment is illustrated in perspective view.

In the second embodiment a cutting slug, generally denoted by reference numeral 40, is comprised of a plurality of compactly arrayed diamonds 14. More particularly, diamonds 14 are bonded together in groups of six to form a regular hexagonal slug 40. Individual diamond elements 14 are bonded together by a thin matrix layer 16 between each adjacent diamond element 14. As with the prior embodiments, cutting slug 40 is fabricated by a conventional hot press or infiltration technique. The completed cutting slug 40 is similarly bonded to a stud 42 by soldering, brazing or other means as diagrammatically depicted by brazing layer 44.

The equilateral triangular prismatic diamond elements 14 of the embodiment of Figure 2 can be generalized to form larger structures as shown in plan view in Figure 3. Thus, a number of hexagonal arrays, each generally denoted by reference numeral 48, can be combined to form a larger cutting slug 46. Each hexagonal subarray 48 which forms part of larger array 46 is bonded together by diamond impregnated matrix material 16 as previously described.

Turn now to Figure 4. Heretofore, the cutting slugs in each embodiment have been described as being built up of triangular prismatic prefabricated synthetic PCDs. The embodiment of Figure 4 generalizes the teachings of the prior embodiments by incorporating prefabricated rectangular prismatic PCD or cubic diamond elements 50. Cubic diamond elements 50 are then combined to form a larger cutting slug, generally denoted by reference numeral 52.

Matrix material 16 may frame or provide an outer encapsulating rectangular enclosure for the array of diamonds 50 for additional security. The rectangular or square cutting slug 52 of the embodiment of Figure 4 can then be bonded to a stud cutter or integrally formed within a matrix body bit.

Turn finally to the embodiment of Figure 5 wherein a higher order, regular polyhedral shaped diamond element 54 is combined with other like-shaped diamond elements of the same or different orders of polyhedral shapes in a compact array to form an enlarged cutting slug,

generally denoted by reference numeral 56. In the embodiment of Figure 5, pentagonal elements 54 are employed in an array wherein some of the elements 54 may contact each other while others remain in spaced-apart relationship. Elements 54 are bound in cutting slug 56 by amalgamation in a diamond impregnated matrix material 16 formed by hot pressing or infiltration.

The various of Figures 1 to 5 respectively are formed as part of an infiltrated matrix body bit, only the tooth of which is diagrammatically shown in the figures. Cutting slugs 10, 40, 46, 52, 56 can be formed by conventional hot press techniques or by infiltration techniques separately from the matrix body bit or may be formed simultaneousy through infiltration techniques with the bit body. Consider first a fabrication technique using a hot press method. Prefabricated synthetic diamonds are placed within an appropriately shaped mold in the desired array. Thereafter, a mixture of metallic powder containing the dispersed diamond grit is tamped into the mold and distributed across diamond elements.

Typically, a substantially greater thickness of diamond bearing metallic powder is placed in the mold than the thickness of PCDs 14, 48, 50, 54. This differential thickness is to compensate for the greater compressibility of the powder as compared to the relatively noncompressible diamonds. Thereafter, the mold is closed by one or more anvils, typically made with the same material as the mold, such as carbon. The filled mold and anvils are then placed with a conventional hot press which typically heats the mold and its contents by an induction heater. Pressure and temperature is then applied to the filled mold, causing the diamond impregnated metallic powder to amalgamate and sinter, ultimately compressing to the shape of cutting slug 10 or 20, as defined by the mold. For example, a pressure of 200 psi and a temperature of 1900°F held for 3 minutes is generally suitable for producing the desired cutting slug. The pressures and temperatures employed are well outside the diamond synthesis or diamond-to-graphite conversion phase regions so that substantially no diamond is created or destroyed in the process.

An infiltration technique may also be employed to either separately manufacture cutting slugs 10, 40, 46, 52, 56 or to manufacture cutting slugs integrally with the matrix tooth. In the case where the cutting slugs are separately manufactured, an appropriately shaped carbon mold is fabricated and diamonds set therein in the desired array. Once again, diamond impregnated metallic matrix powder is filled within the mold and mold then furnaced. The power is allowed to sinter and infiltrate between diamonds 14 to form the finished cutting slug. Thereafter, the preformed cutting slug may then be placed within a carbon mold for a matrix bit and fabricated into the bit in a conventional manner. Alternatively, diamond elements may be individually glued into a mold for a matrix body bit in the desired array and position. Thereafter, the matrix body bit is filled first with a layer of diamond impregnated metallic powder and then is continued to be filled with various grades of metallic powder according to conventional matrix bit fabrication techniques. The entire mold is then furnaced so that the cutting slug is simultaneously and integrally formed with the body of the matrix bit.

Many other modifications or alterations may be made by those having ordinary skill in the art without departing from the scope of the invention. The illustrated embodiment has only been shown by way of an example and should not be taken as limiting the invention which is defined in the following claims.

Claims

1. A cutter for mounting on a rotary drill bit, comprising a matrix (16) and a plurality of hard cutting element (14, 48, 50, 54) disposed in said matrix (16) to form a cutting slug (10, 40, 46, 52, 56) including at least one exposed end face (34), characterized in that

— the cutting elements (14, 48, 50, 54) comprise polyhedrally-shaped synthetic thermally stable polycrystalline diamond (PCD),

— said PCD elements (14, 48, 50, 54) are grouped in a spatially predetermined relationship in said exposed end face (34) such that each PCD element (14, 48, 50, 54) has at least one fully exposed surface substantially coplanar with said matrix (16) at said end face (34) to form a cutting slug (10, 40, 46, 52, 56),

— said PCD elements (14, 48, 50, 54) are disposed within said cutting slug (10, 40, 46, 52, 56) in a compact array wherein each PCD element is immediately proximate to at least one adjacent PCD element with no matrix material (16) intermediate to collectively comprise a cutting surface of said cutting slug (10, 40, 46, 52, 56) by exposed diamond material comprising said PCD elements (14, 48, 50, 54) and no matrix (16) intermediate at said end face (34), whereby an enlarged diamond cutter simulating a unitary diamond table is provided for mounting in a drill bit.

2. A cutter as claimed in claim 1 wherein said matrix material (16) incorporating a dispersion of diamond grit at least in that portion of said matrix material (16) adjacent to said cutting face of said cutting slug (10, 40, 46, 52).

3. A cutter as claimed in claim 2 wherein said diamond grit being uniformly dispersed throughout the volume of said matrix material (16).

4. A cutter as claimed in one of claim 1—3 wherein said plurality of PCD elements (14, 48, 50, 54) are arranged and configured in said cutting slug (10, 40, 46, 52, 56) in a plurality of distinguishable arrays.

5. A cutter as claimed in one of claims 1—4 wherein matrix material (16) frames or provides an outer encapsulating enclosure for the array(s) of PCD elements (14, 48, 50, 54).

Patentansprüche

1. Schneidglied für eine Anbringung auf einem Drehbohrmeißel, mit einer Matrix (16) oder einer Mehrzahl von harten Schneidelementen (14, 48, 50, 54), die in der Matrix (16) zur Bildung eines Schneidkörpers (10, 40, 46, 52, 56) angeordnet sind, der zumindest eine freiliegende Endfläche (34) aufweist, dadurch gekennzeichnet, daß die Schneidelemente (14, 48, 50, 54) aus polyedrisch geformten, synthetischen, thermisch stabilen, polykristalinen Diamantmaterial (PCD) besteht,

— die PCD-Elemente (14, 48, 50, 54) in räumlich vorbestimmtem Verhältnis in der exponierten Endfläche (34) derart gruppiert sind, daß jedes PCD-Element (14, 48, 50, 54) zumindest eine voll freiliegende Oberfläche hat, die an der Endfläche (34) im wesentlichen koplanar mit der Matrix (16) unter Bildung eines Schneidkörpers (10, 40, 46, 52, 56) ausgerichtet ist,

— die PCD-Elemente (14, 48, 50, 54) in dem Schneidkörper (10, 40, 46, 52, 56) in einer kompakten Anordnung vorgesehen sind, in der jedes PCD-Element zumindest einem benachbarten PCD-Element unmittelbar ohne Matrixmaterial (16) dazwischen benachbart ist, um gemeinsam eine Schneidfläche des Schneidkörpers (10, 40, 46, 52, 56) aus exponiertem Diamantmaterial der PCD-Elemente (14, 48, 50, 54) ohne Matrixmaterial (16) zwischen diesen an der Endfläche (34) zu bilden, wodurch ein vergrößertes Diamantschneidglied für eine Anbringung an einem Drehbohrmeißel gebildet ist, in der eine einheitliche Diamanttafel simuliert.

2. Schneidglied nach Anspruch 1, bei dem das Matrixmaterial (16) eine Dispersion aus Diamantgrieß zumindest in jenem Teil des Matrixmaterials (16) aufweist, der an die Schneidfläche des Schneidkörpers (10, 40, 46, 52) angrenzt.

3. Schneidglied nach Anspruch 2, bei dem der Diamantgrieß über das Volumen des Matrixmaterials (16) gleichförmig verteilt ist.

4. Schneidglied nach ewinem der Ansprüche 1 bis 3, bei dem die Mehrzahl der PCD-Elemente (14, 48, 50, 54) im Schneidkörper (10, 40, 46, 52, 56) in einer Mehrzahl von unterschiedlichen Anordnungen angeordnet und konfiguriert sind.

5. Schneidglied nach einem der Ansprüche 1 bis 4, bei dem Matrixmaterial (16) für die Anordnung(en) von PCD-Elementen (14, 48, 50, 54) eine Einrahmung oder einen äußeren kapselnden Abschluß bildet.

Revendications

1. Organe de coupe à monter sur un trépan de forage rotatif, comprenant une matrice (16) et une pluralité d'éléments de coupe durs (14, 48, 50, 54) disposés dans la matrice (16) pour former une plaquette de coupe (10, 40, 46, 52, 56) comprenant au moins une face d'extrémité exposée (34), caractérisé en ce que:

— les éléments de coupe (14, 48, 50, 54) comprennent du diamant polycristallin, thermiquement stable, synthétique, de forme polyédrique (DPC);

— les éléments DPC (14, 48, 50, 54) sont groupés dans une relation prédéterminée dans l'espace dans la face d'extrémité exposée (34) de telle façon que chaque élément DPC (14, 48, 50, 54) présente au moins une surface entièrement exposée, en substance coplanaire avec la matrice (16) au niveau de la face d'etrémité (34) pour former une plaquette de coupe (10, 40, 46, 52, 56);

— les éléments DPC (14, 48, 50, 54) sont disposés dans la plaquette de coupe (10, 40, 46, 52, 56) en un arrangement compact dans lequel chaque élément DPC est tout proche d'au moins un élément DPC adjacent sans matière de matrice (16) entre eux afin de constituer collectivement une surface de coupe de la plaquette de coupe (10, 40, 46, 52, 56) par de la matière diamantée exposée comprenant les éléments DPC (14, 48, 50, 54) sans matrice (16) intermédiaire au niveau de la face d'extrémité (34), de sorte qu'un organe de coupe surcalibré simulant une table de diamant d'une seule pièce à monter dans un trépan de forage est réalisé.

2. Organe de coupe suivant la revendication 1, dans lequel la matière de matrice (16) comprend une dispersion de grains de diamant au moins dans la partie de la matière de matrice (16) adjacente à la face de coupe de la plaquette de coupe (10, 40, 46, 52).

3. Organe de coupe suivant la revendication 2, dans lequel la grenaille de diamant est dispersée uniformément dans la totalité du volume de la matière de matrice (16).

4. Organe de coupe suivant l'une quelconque des revendications 1 à 3, dans lequel les éléments DPC (14, 48, 50, 54) de la pluralité sont disposés et agencés dans la plaquette de coupe (10, 40, 46, 52, 56) de manière à former plusieurs arrangements distinguables.

5. Organe de coupe suivant l'une quelconque des revendications 1 à 4, dans lequel la matière de matrice (16) encadre le ou les arrangements d'éléments DPC (14, 48, 50, 54) ou forme une enceinte d'encapsulation extérieure pour ce ou ces arrangements.

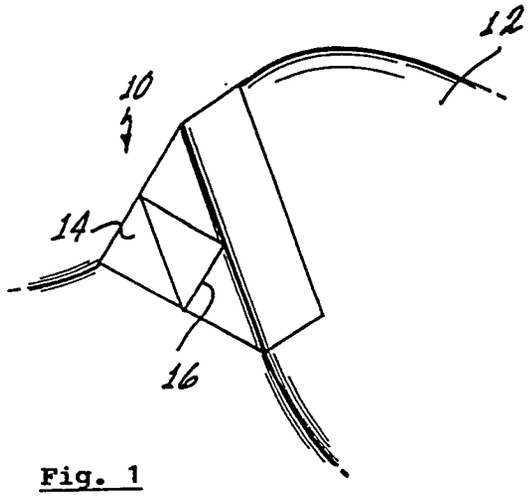

Fig. 1

Fig. 2

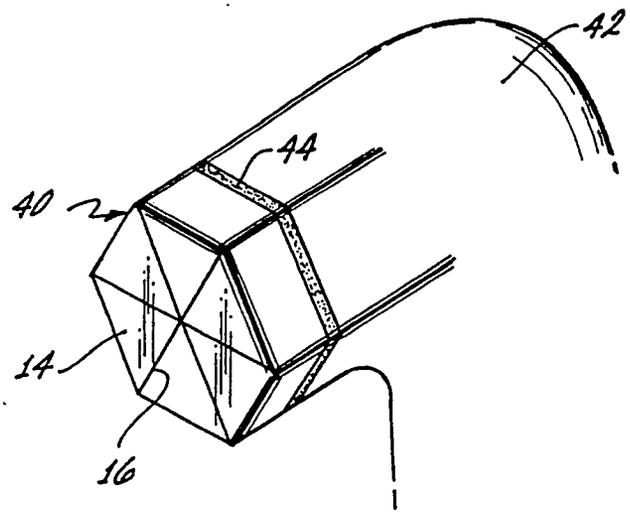

Fig. 4

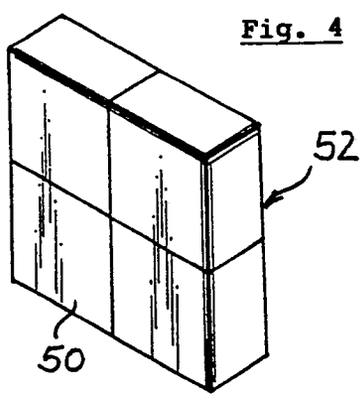

Fig. 3

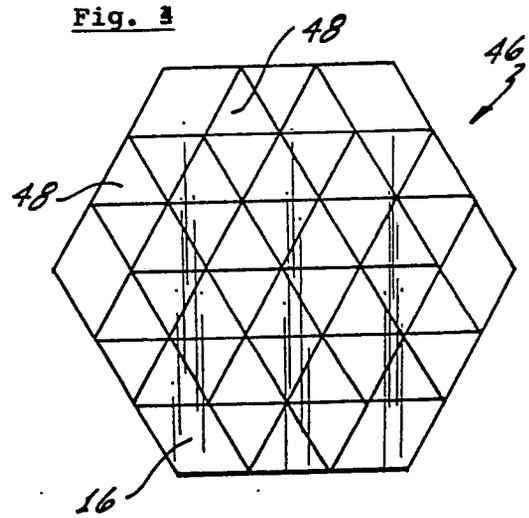

Fig. 5