(19) Europäisches Patentamt
European Patent Office
Office européen des brevets

(11) Publication number: **0 239 319**
B1

(12) # EUROPEAN PATENT SPECIFICATION

(45) Date of publication of the patent specification: **05.09.90**

(51) Int. Cl.[5]: **B65D 33/16**, B65D 77/04

(21) Application number: **87302342.8**

(22) Date of filing: **18.03.87**

(54) **Reclosable package with peelable seal.**

(30) Priority: **21.03.86 US 842503**

(43) Date of publication of application:
30.09.87 Bulletin 87/40

(45) Publication of the grant of the patent:
05.09.90 Bulletin 90/36

(84) Designated Contracting States:
BE CH DE FR GB IT LI NL SE

(56) References cited:
EP-A- 0 160 619
FR-A- 1 494 586

(73) Proprietor: **THE DOW CHEMICAL COMPANY, 2030 Dow Center Abbott Road P.O. Box 1967, Midland Michigan 48640-1967(US)**

(72) Inventor: **Behr, R. Douglas, 4511 Huron Drive, Midland Michigan 48640(US)**
Inventor: **Zieke, Larry M., 1108 Airfield Street, Midland Michigan 48640(US)**

(74) Representative: **Burford, Anthony Frederick et al, W.H. Beck, Greener & Co. 7 Stone Buildings Lincoln's Inn, London WC2A 3SZ(GB)**

EP 0 239 319 B1

Note: Within nine months from the publication of the mention of the grant of the European patent, any person may give notice to the European Patent Office of opposition to the European patent granted. Notice of opposition shall be filed in a written reasoned statement. It shall not be deemed to have been filed until the opposition fee has been paid (Art. 99(1) European patent convention).

Description

This present invention relates to a package comprising a bag which is useable as a liner in a box or which is useable as a bag itself, which liner or bag is provided with a protecting peelable seal as well as a reclosable fastener. Such bags are known from, for example EP-A 160 619 and have the peelable seal above the reclosable fastener. It has now been discovered that it is more efficient and desirable to form the peelable seal below the reclosable fastener rather than above it, particularly when the package comprises a bag or liner within a box.

The package of the invention provides superior security against the atmosphere and contaminants and preserves product quality, yet remains reclosable after initial opening and does so without the necessity of using excess amounts of material in forming the bag or liner so as to result in cost savings as well as convenience to the ultimate consumer.

There has been a long felt need for a package for food products such as cereals, crackers, and the like in which the products are secured against contamination, moisture, and the atmosphere, and in which the package is readily openable and reclosable so that,when the package is opened and only a portion of the contents is removed,the remainder of the content can be conveniently saved in a sealed condition for future use. Most of such packages presently comprise a box with a bag type liner having only a peel type seal at the top. Once the peel seal is opened or the bag otherwise punctured to gain access to the contents,it is next to impossible to reseal the bag effectively. Most users will either roll-up the bag to close the open top partially or simply crumple the open top portion of the bag back into the box and close a loosely interlocking flap at the top of the box. Neither of these procedures are particularly effective to sealing the contents to the atmosphere or contaminants.

Bags with zipper-like closures which are reclosable are well known. Japanese Utility Model Publication 57 (1982) - 105248 however discloses a bag having a peelable seal located above a reclosable fastener so as to lend air tightness to the bag at least until the peelable seal is broken. Thereafter the lower reclosable fastener is used to prevent accidental spilling of the contents from the bag and preservation of the quality, i.e. freshness, of the content. It is also a purpose of locating the peel seal above the reclosable fastener such that the peel seal acts as a safety closure in the event the reclosable fastener opens accidentally during packaging, transportation, or subsequent handling before or when it reaches the ultimate consumer.

However, in an arrangement in which the peel seal is located above the reclosable fastener,an excessive amount of material is required above the reclosable fastener, which is particularly disadvantageous when a bag with such an arrangement is to serve as a liner in a box as is common in the art of packaging food products such as for example, cereals, crackers or chips. Since the reclosable fastener is located below the peelable seal, the reclosable fastener must be located much further down into the box, thus reducing the content which can be contained in a particular size box. On the other hand, if the reclosable fastener is located further up in the box, an excessive amount of material must be provided to extend above the top of the box when the box is opened. This, in turn, requires that the excess amount of material must be forced back into the box in order to close the box lid. Such excess amount of material is economically undesirable even where the bag is the sole container for the product and is not placed in a separate box. It is also easier to open and reclose the reclosable fastener element when it is not located so far down in the box. It is therefor advantageous to have less bag material above the reclosable fastener than below it.

The present invention resides in a plastic bag or liner comprising opposed side walls, a closed bottom and an openable top comprised of gripping flanges, a reclosable fastener on the inside surfaces of said gripping flanges adjacent the openable end of the bag or liner, a peel seal located across the openable top and adjacent the reclosable fastener on the side thereof towards the interior of the bag or liner, said reclosable fastener being positioned so as to close the end of the container above the product contained therein once the peel seal is opened.

Figure 1 is an elevational view of a reclosable plastic bag or liner formed in accordance with the principles of the present invention;

Figure 2 is an enlarged partial cross-sectional view of the bag or liner of Figure 1 taken along reference line 2-2 showing a reclosable fastener and a peel seal arranged in accordance with the principles of the present invention;

Figure 3 is a cross-sectional view through a bag or liner positioned in a box having a reclosable fastener without a peel seal;

Figure 4 is a similar cross-sectional view of a bag or liner positioned in a box, a peel seal extends across the opening of the bag or liner above the reclosable fastener; and

Figure 5 is a cross-sectional view of a bag or liner having a peel seal located below the reclosable fastener in accordance with the principles of the present invention.

Referring more particularly to Figure 1, the bag or liner 10 is preferably formed of a mono-layer or multi-layer thermoplastic material having inner surfaces which are heat sealable so that the sides 12 and 14 thereof can be heat sealed about their edges 18 to form a bag enclosure. The material is preferably fold-

ed to form the bottom 16 of bag 10, but could be heat sealed as well. It is also possible to include materials other than thermoplastic materials in various layers of a multi-layer bag, such as a metallic layer for static dissipation, or moisture and vapor penetration prevention. The inner surface or layer to be sealed can be an ethylene homopolymer or copolymer or blends thereof, for example, or can be formed of other heat sealable resins or coatings. A multi-layer bag can also include polymeric material layers which substantially prohibit penetration by either gases or liquids or both, such as materials commonly known as polyethylene terephthalate, nylons, Saran® (vinylidene chloride copolymer) resins, ethylene vinyl alcohol resins, polyolefins, including polypropylene and various densities of polyethylene and including linear low density polyethylenes.

Adhesive coatings can be included to form the actual heat seals and peel seal as generally described above. Adhesive polymeric blends such as ethylene vinyl acetate (EVA) copolymer can be used to coat the inside or form the inside layer of the bag or liners. Other well known adhesive polymeric materials can be used instead, such as Surlyn® a sodium comonomer resin made by the duPont Co. or Primacor® resins made by The Dow Chemical Company, including ethylene acrylic acid (EEA) copolymer resins. A typical multi-layer bag can include, for example, an exterior layer of a high density polyethylene (HDPE) next to which is an EVA copolymer resin, then a third layer including, for example, either a Saran® resin made by the Dow Chemical Company or an ethylene vinyl alcohol resin, with minor additives, and an inside layer of an EVA resin for forming side seals 18 and the peel seal 20 shown in Figures 1 and 2. The third layer would act as an effective barrier to gases for normal food applications. However, such a gas barrier would not be required in many instances.

Above the peel seal 20 is located a conventional reclosable fastener 21 such as that illustrated in British Patent No. 2,133,462 having a male fastener element 22 with ribs 24 on either side thereof and a female fastener element 26 engaged therewith as shown in Figure 2. The opening end of the bag includes gripping flanges 28 which are used to separate the reclosable fasteners as well as to pull apart the peel seal 20 located at the neck down portions 30 and 32 on sides 12 and 14 respectively of bag 10.

Where high gas barrier protection is not a critical factor, as is true in over 50 percent of packages used for cereals, for example, such products could be packaged by using for the bag or liner of this invention, an HDPE film which is coated on the inside with an EVA composition having a vinyl acetate content of about 28 percent blended, for example, with an LDPE, a Surlyn® resin, and various concentrates wherein the EVA copolymer percentage of the composition would be about 48 weight percent, the LDPE composition would be 25 weight percent, and the Surlyn® composition would be about 15 weight percent of the total composition. The peel seal is made by regulating the temperature and pressures so that it is less than that needed to form the peripheral margins 18 of the bag 10, for example, where a complete, strong bonding seal must be made. For example, the pressure and duration for the surrounding seals of edges 18 could be at 115°C for a period of about 0.8 seconds where the seal pressure to form the peel seal 20 could be at 99°C for a period of about 0.3 seconds with the coating described above.

Figures 3 to 5 illustrate the significant advantages of placing the peel seal in the arrangement disclosed by this invention over box liners or bags having no peel seal or with a peel seal located above the reclosable fastener. Bags or liners without are closable fastener, say with only a peel seal, are not compared directly here in detail because they a basically not reclosable and have apparent disadvantages as compared with reclosable bags or liners. Figure 3 illustrates in cross-section a carton 34 in which is placed a bag 10′ containing a product 36. The carton has an upper end or top 38 over which is folded closure top flaps 40 which form a temporary enclosure for the box when it is full. The dimension Y represents the height of carton 34. The dimension P represents the height of the product contained within bag 10′. The dimension H represents the distance from the top 38 of the box to the reclosable fastener 21, and the dimension L represents the lip height (length) above the reclosable fastener 21 of the bag or liner. In Figure 4, the dimensions are basically the same, except here a peel seal is located above the reclosable fastener 21 of liner 10″, S represents the length of a peel seal 20 above the reclosable fastener, and L represents the length of the bag lips or gripping flanges above the peel seal.

Figure 5 is similar to the other figures, only here the dimension S of liner 10 represents the length of peel seal 20 which is located below the reclosable fastener 21, and L represents the distance of the lip above the reclosable fastener 21. To determine the materials saved over the embodiment of Figure 4 having a peel seal above the reclosable fastener to that of the embodiment of Figure 5, the latter employing a peel seal below the reclosable fastener, the following calculations can be made:

Assuming the reclosable fastener extends above the top of the box by the same amount (H) . . . say 2.5 cm, in Figure 3, and using formulae derived for a reclosable fastener box liner in a box with dimensions Z being the box depth; X being the box width; Y being box height, the liner height B is determined by:

$$B = Z/2 + P + \sqrt{(Y+1-P)^2 + (Z/2)^2} + L$$

This formula needs to be modified for the peel seal bag of Figure 5. The height will be ½ of the box depth (Z) + the distance to the top of the product (P) + the diagonal distance to the peel seal + peel seal (S) + lip

length (L).

$$B = Z/2 + P + \sqrt{(Y+1-P-S)^2 + (Z/2)^2} + S + L$$

The formula to determine liner height for the peel seal above the reclosable fastener (Figure 4) will be ½ of the box depth (Z) + the distance to the top of the product (P) + the diagonal distance to the reclosable fastener + the peel seal (S) + lip length (L).

$$B = Z/2 + P + \sqrt{(Y+1-P)^2 + (Z/2)^2} + S + L$$

From several examples, it was determined that over 5 percent more material is required for a box liner with a peel seal located above rather than below the reclosable fastener. A 5 percent material savings can amount to a significant savings when one considers the many millions of box liners that are commercially made, used and sold annually.

As pointed out above, considerable material savings can be expected by placing the peel seal below the reclosable fastener rather than above. It has also been found in market tests that there is a considerable degree of preference by the consumer for having a shorter entrance path to the package and generally for having a peel seal below the reclosable fastener, because the bag liner feels familiar like those not having a reclosable fastener, i.e. where one opens a peel seal which is directly above the product and there is no reclosable fastener. Once the peel seal is opened up, the distance from the top of the box to the reclosable fastener increases slightly. This is an advantage to operating the reclosable fasteners as described previously.

If the reclosable fastener is some fixed distance above the box, it is evident in viewing this invention that locating the peel seal below the fastener requires less material in the bag than locating it above the fastener.

Put another way, the reclosable fastener will be higher out of the box where a peel seal is located below the reclosable fastener than where the peel seal is located above the reclosable fastener for any given amount of material, so that if one were to use the same amount of material it would be much easier to gain access to the contents where the peel seal is located below the reclosable fastener.

A majority of people in a customer study indicated that they preferred the peel seal below the reclosable fastener as compared to the peel seal above the reclosable fastener because the closure can be opened and closed more easily, the contents poured easier, there was less package above the reclosable fastener, there was less bag and it was not as bulky, it gave the desirable appearance of shorter lips, requires less dexterity to open and close, and generally is preferable.

For example, various polymeric resins can be used, either thermoplastic or otherwise, and metallized layers can be used in the structure of the bag itself, reclosable fasteners can be applied in various ways well known in the prior art, and can take various forms and/or other types of fasteners than those described herein can be employed and the configuration of the peel seal can be varied all within the scope of the present invention.

Claims

1. A plastic bag or liner (10), comprising opposed side walls (12, 14), a closed bottom (16) and an openable top forming a pair of gripping flanges (28), a reclosable fastener (21) on the inside surfaces of said gripping flanges adjacent the openable end of the bag or liner, and a peel seal (20) extending across the openable top, said reclosable fastener being positioned so as to close the end of the container above the product contained therein once the peel seal is opened, characterised in that the peel seal is positioned adjacent the reclosable fastener on the side thereof towards the interior of the bag or liner.

2. A box containing a bag or liner as claimed in Claim 1, wherein said reclosable fastener extends above an open end of said box when said box is in an open condition.

3. A box as claimed in Claim 2 having a product contained in the bag or liner, the level of the product being below the top of said box, and wherein the peelable seal and the reclosable fastener are positioned above the top of the box when extending out of the open box.

4. A box as claimed in Claim 3, wherein said reclosable fastener is positioned about 2.5 cm above the top of the open box and said peelable seal is less than about 2.5 cm in height in the region between the top of the box and the reclosable fastener.

Patentansprüche

1. Kunststoffbeutel oder Auskleidung (10) mit einander gegenüberliegenden Seitenwänden (12, 14), einem geschlossenen Boden (16) und einer, ein Paar Halteflanschen (28) bildenden, zu öffnenden Oberseite, einem wiederverschließbaren Gleitverschluß (21) auf der Innenseite der Halteflansche neben dem zu öffnenden Ende des Beutels oder der Auskleidung und einer auseinanderziehbaren Dichtung (20), die sich über die zu öffnende Oberseite erstreckt, wobei der wiederverschließbare Gleitverschluß so angeordnet ist, daß er das Ende des Behälters über dem darin befindlichen Produkt verschließt, wenn die auseinanderziehbare Dichtung geöffnet ist, dadurch gekennzeichnet, daß die auseinanderziehbare Dichtung neben dem wiederverschließbaren Gleitverschluß auf der Innenseite des Beutels oder der Auskleidung angeordnet ist.

2. Behälter, enthaltend einen Beutel oder eine Auskleidung nach Anspruch 1, dadurch gekennzeichnet, daß sich der wiederverschließbare Gleitverschluß über ein offenes Ende des Behälters erstreckt, wenn der Behälter offen ist.

3. Behälter nach Anspruch 2, dadurch gekennzeichnet, daß sich ein Produkt in dem Beutel oder der Auskleidung befindet, dessen Niveau unterhalb der Oberseite des Behälters liegt, und wobei die auseinanderziehbare Dichtung und der wiederverschließbare Gleitverschluß oberhalb der Oberseite des Behälters angeordnet sind, wenn sie sich aus dem offenen Behälter heraus erstrecken.

4. Behälter nach Anspruch 3, dadurch gekennzeichnet, daß der wiederverschließbare Gleitverschluß etwa 2,5 cm über der Oberseite des offenen Behälters angeordnet ist und die auseinanderziehbare Dichtung eine geringere Höhe als etwa 2,5 cm aufweist und sich im Bereich zwischen der Oberseite des Behälters und dem wiederverschließbaren Gleitverschluß befindet.

Revendications

1. Sac ou garniture (10) en plastique comportant des parois latérales opposées (12, 14), un fond fermé (16) et un dessus pouvant être ouvert formant une paire de flasques d'agrippement (28), un dispositif (21) de fermeture pouvant être refermé sur les surfaces intérieures desdits flasques d'agrippement au voisinage de l'extrémité ouverte du sac ou de la garniture, et une pellicule d'étanchéité arrachable (20) s'étendant en travers du dessus pouvant être ouvert, ledit dispositif de fermeture pouvant être refermé étant positionnée de façon à fermer l'extrémité du récipient au-dessus du produit contenu à l'intérieur de celui-ci une fois que la pellicule d'étanchéité arrachable est ouverte, caractérisé en ce que la pellicule d'étanchéité arrachable est positionnée au voisinage du dispositif de fermeture pouvant être refermé sur le côté de celui-ci dirigé vers l'intérieur du sac ou de la garniture.

2. Boîte contenant un sac ou une garniture selon la revendication 1, dans lequel ledit dispositif de fermeture pouvant être refermé s'étend au-dessus d'une extrémité ouverte de ladite boîte lorsque ladite boîte est dans un état ouvert.

3. Boîte selon la revendication 2, ayant un produit contenu dans le sac ou la garniture, le niveau du produit étant en-dessous du sommet de ladite boîte, et dans lequel la pellicule d'étanchéité arrachable et le dispositif de fermeture pouvant être refermé sont positionnés au-dessus du sommet de la boîte lorsqu'ils s'étendent en-dehors de la boîte ouverte.

4. Boîte selon la revendication 3, dans laquelle ledit dispositif de fermeture pouvant être refermé est positionné à environ 2,5 cm au-dessus du sommet de la boîte ouverte et ladite pellicule d'étanchéité arrachable a une hauteur inférieure à 2,5 cm dans la région entre le sommet de la boîte et le dispositif de fermeture pouvant être refermé.

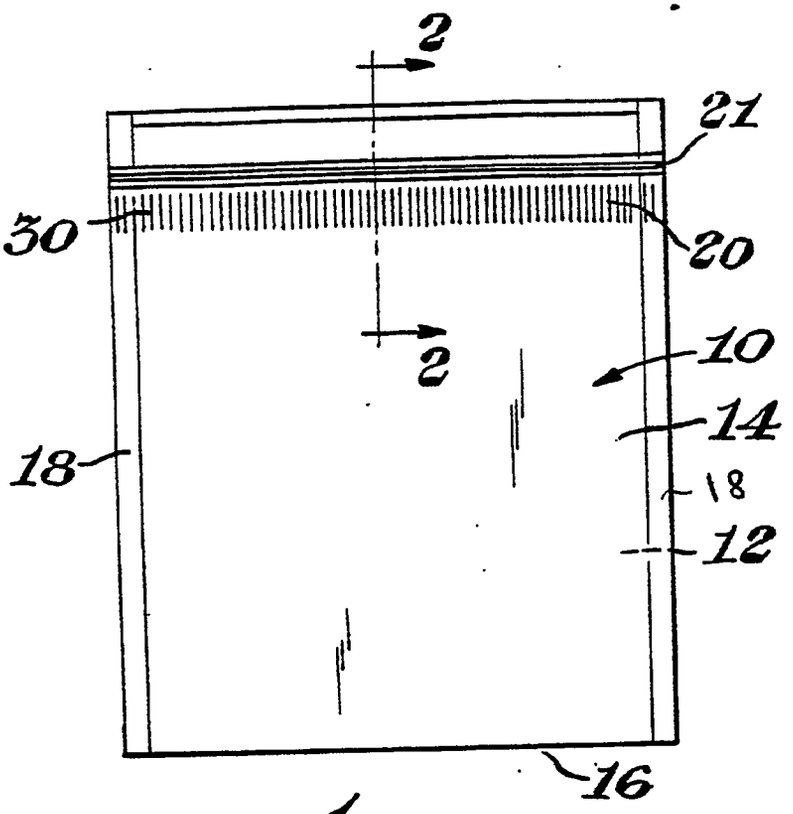

Fig. 1

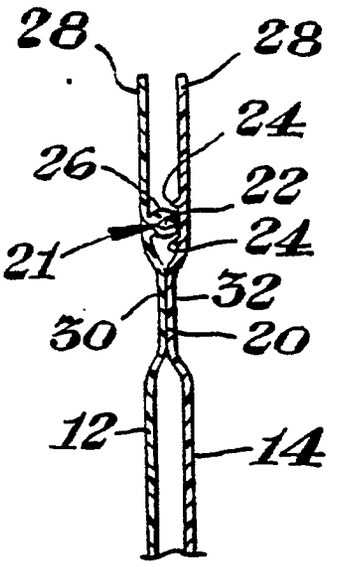

Fig. 2

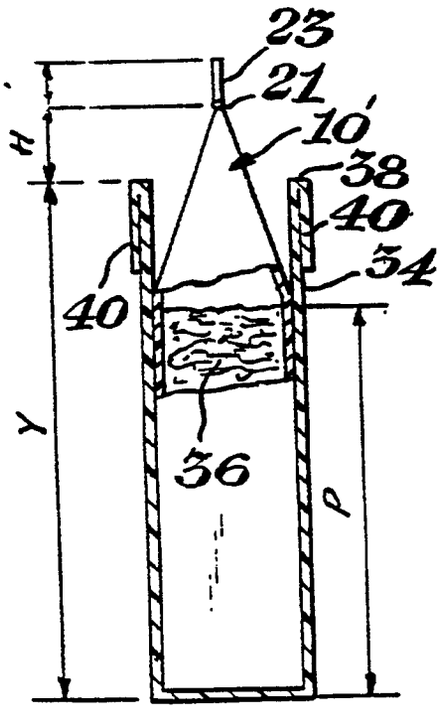

Fig. 3

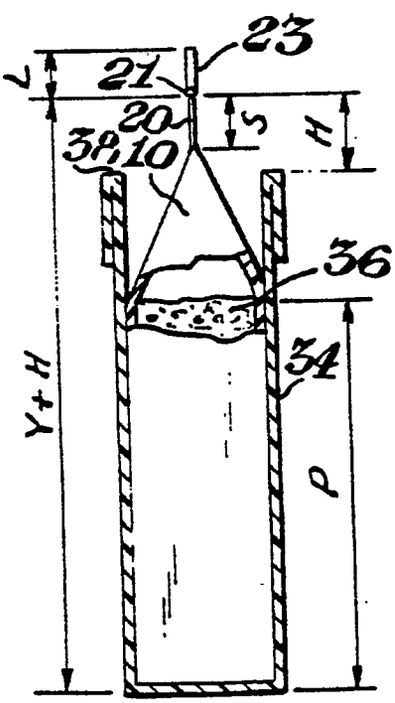

Fig. 5

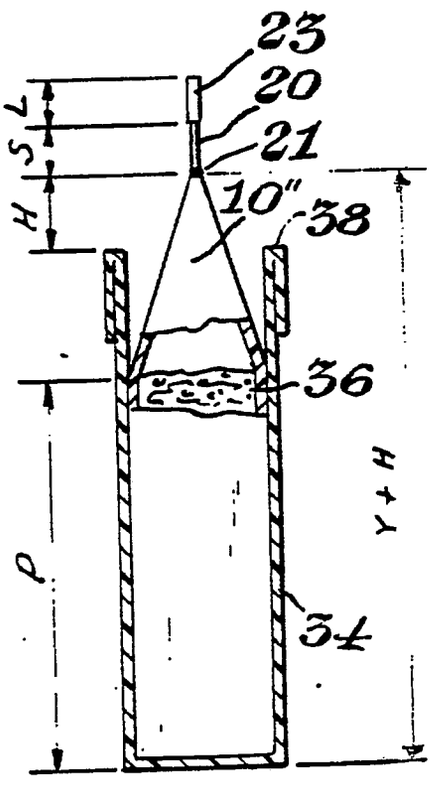

Fig. 4