(19) Europäisches Patentamt
European Patent Office
Office européen des brevets

(11) Publication number : **0 294 460 B1**

(12) # EUROPEAN PATENT SPECIFICATION

(45) Date of publication of patent specification : **14.09.94 Bulletin 94/37**

(51) Int. Cl.$^5$ : **H01R 13/658**

(21) Application number : **88900655.7**

(22) Date of filing : **16.12.87**

(86) International application number : **PCT/US87/03383**

(87) International publication number : **WO 88/04841 30.06.88 Gazette 88/14**

(54) **SHIELDED DATA CONNECTOR.**

(30) Priority : **22.12.86 US 945403**
**22.12.86 US 945401**

(43) Date of publication of application : **14.12.88 Bulletin 88/50**

(45) Publication of the grant of the patent : **14.09.94 Bulletin 94/37**

(84) Designated Contracting States : **AT CH DE FR GB IT LI NL SE**

(56) References cited :
**US-A- 4 310 213**
**US-A- 4 449 778**
**US-A- 4 619 494**

(73) Proprietor : **THE WHITAKER CORPORATION**
**Suite 450,**
**4550 New Linden Hill Road**
**Wilmington, Delaware 19808 (US)**

(72) Inventor : **CHANDLER, Curtis, Sephus**
**204 Redcoat Lane**
**King, NC 27021 (US)**
Inventor : **MARSH, Edward, Kenneth**
**235 Sattlewood Drive**
**Kernersville, NC 27284 (US)**

(74) Representative : **Warren, Keith Stanley et al**
**BARON & WARREN**
**18 South End**
**Kensington**
**London W8 5BU (GB)**

EP 0 294 460 B1

Note : Within nine months from the publication of the mention of the grant of the European patent, any person may give notice to the European Patent Office of opposition to the European patent granted. Notice of opposition shall be filed in a written reasoned statement. It shall not be deemed to have been filed until the opposition fee has been paid (Art. 99(1) European patent convention).

## Description

The invention relates to electrical connectors for use in terminating shielded multiconductor cables and more specifically to shielded local area network electrical connectors.

U.S. Patent 4,501,459 discloses a local area network connector specifically intended for use in the data communications industry. These connectors can be employed in a closed loop data communications link in which various equipment such as computer terminals can be interconnected in a system. These connectors are specifically adapted for use in interconnecting numerous micro or mini computers in a computer network in an office environment. Connectors of this type have standard interface dimensions and configurations. These connectors must also be shielded to prevent spurious electrical signals and noise from affecting the signals in the network. These connectors also require a shunting capability since the conductors are part of a network and can be connected in series with other similar connectors. This shunting capability is necessary to prevent disruption of the network when an individual plug is not connected to external equipment.

The structure and components of local area network connectors of this type is represented by the structure of the connector shown in U.S. Patent 4,501,459. These connectors include a plurality of spring metal terminals having insulation displacement wire barrels for establishing electrical connection with the individual conductors forming the multi conductor shielded cable. Terminals are positioned on a support housing and upper and lower shields can be positioned in surrounding relationship to the terminals and the support housing. Shield members are permanently attached to upper and lower cover members and the cover members are mated to both encapsulate the conductor and to common the upper and lower shields to the cable shielding.

Similar data connectors of this type are shown in U.S. Patents 4,449,778; 4,508,415; 4,582,376; 4,602,833; 4,619,494; 4,653,825; 4,641,906; 4,671,599. U.S. Patent 4,653,825 in particular relates to a data connector which utilizes a housing slidably receivable over the internal housing subassembly. Although the data connector shown in U.S. Patent 4,653,825 provides an excellent interconnection for a shielded multiconductor cable in a local area network, the data connector is designed for assembly in a harness assembly plant. As the post molded grommet must be molded after the assembly thereof, the data connector cannot be field assembled, and the cable must be cut to specific lengths in the harness assembly plant.

There exists within the industry a need for a low cost local area network connector of this general type which can be easily hand assembled at the end user's facility. The instant invention fills that need for a relatively lower cost, by providing a hand assembled connector which is suitable for use in a local area network in combination with prior art connectors of the type described herein.

The invention consists in an electrical connector for interconnection to a shielded cable, including an insulative housing, which houses a plurality of electrical terminals, shielding means substantially surrounding the housing, and an insulative cover means for the shielding means, the housing including a terminal support floor and sidewalls extending upwardly therefrom, the terminal support floor including terminal receiving means for receipt of the terminals, each said terminal having a resilient contact portion and a wire termination means; the connector being characterized in that the insulative cover means is profiled as a premolded insulative boot means slidably receivable over the insulative housing and the shielding means and at least partially encapsulating said insulative housing and said shielding means therein.

In order that the instant invention may be more readily understood, reference will now be made to the accompanying drawings, in which:-

Figure 1 is an isometric view of a data connector embodying the instant invention.

Figure 2 is an isometric view of the data connector of Figure 1 showing the components exploded.

Figure 3 is an isometric view similar to Figure 1 showing the shielded subassembly partially exploded from the premolded boot.

Figure 4 is an isometric view of the housing subassembly.

Figure 5 is a cross-sectional view of the insulative housing with the lower shield in place.

Figure 6A is a cross-sectional view of the premolded boot.

Figure 6B is a cross-sectional view, similar to that of Figure 6A, showing the assembled data connector of Figure 1.

Figure 7 is an isometric view showing the data connector of the instant invention poised for receipt in a data connector having a T-bar and a T-slot.

Figure 8 is a view similar to that of Figure 7 showing the latchability of the T-bar with the two raised detents.

Figure 9 is an isometric view of the components of an outlet assembly for use with the instant invention, the components being shown exploded away from the wall plate.

Figure 10 is an enlarged front plan view of the data connector interface of the wallplate shown in Figure 9.

Figure 11 is a cross-sectional view taken through lines 11-11 of Figure 10.

Figure 12 is a cross-sectional view taken through lines 12-12 of Figure 10.

Figure 13 is a cross-sectional view of the modular

jack interface taken through lines 13-13 of Figure 9.

Figure 14 is a view showing the shielded subassembly inserted from the rear of the wallplate disposed within the data connector interface.

Figure 15 is a cross-sectional view taken through lines 15-15 of Figure 10 showing the shielded subassembly also in cross-section inserted through the rear of the wallplate disposed within the data connector interface.

Figure 16 is a view similar to that of Figure 15 showing the shielded subassembly poised for receipt of the data connector of the invention.

Figure 17 is similar to that of Figure 16 showing the two shielded subassemblies electrically connected with the premolded boot latchably attached within the data connector interface of the wallplate.

Figure 18 shows the shielded subassembly within the data connector interface as shown in Figure 8 poised for receipt of a data connector including a T-bar and a T-slot for latching to the wallplate.

Referring first to Figures 1 and 3, the data connector 4 of the instant invention generally comprises a shielded subassembly 2 and a premolded boot 120, the shielded subassembly 2 being slidably receivable into and out of the premolded boot 120 and being latchably attached therein. Referring now to Figure 2, the shielded subassembly 2 generally includes a housing member 5, a stuffer cap 50, and shield members 70 and 100. The data connector housing 5 will be described in greater detail, with reference to Figures 2 and 4.

With reference first to Figure 4, the housing 5 generally comprises a terminal support floor 10 having a plurality of channels 12 therein for receiving terminals 30. Extending upwardly from the terminal support floor are sidewalls 14 having internal grooves 22 and external ribs 20. A bridge portion 6 extends across the two sidewalls to define a front mating face for the data connector. Extending below the bridge 6 is a rib 25 which extends from the rear edge of the bridge (Figure 4) to the forward edge of the bridge (Figure 2). The rib 25 defines two windows 8 which also extend from the rear edge of the bridge to the forward edge of the bridge to define two shield receiving surfaces 24 (Figure 2). The sidewalls 14 extend from the rear of the data connector 4 to the front mating face of the data connector to define two 45 degree surfaces at the front mating face, referred to generally as 18.

Terminals 30 include insulation displacement wire barrels 32, a blade portion 34, a resilient contact portion 36 and a commoning foot 38. The resilient contact portion 36 is looped back upon itself and spaced above the terminal support floor. The resilient contact portion 36 is disposed at the front mating face of the housing 5 for overlapping interconnection with like terminals, the two resilient contact portions of mating connectors contacting each other to deflect respective resilient contact portions towards the blade portion of respective terminals. Stuffer cap 50 includes alignment ribs 52 along the sides, wire receiving slots 54 and stuffer cylinders 56, the stuffer cylinders 56 having an inside diameter larger than the outside diameter of the barrels 32 of the terminals 30.

Referring now to Figure 2 only, the shield member 70 includes a plate member 72 with continuous shield members 90 extending from the plate member 72 through a bent portion 92, the two shield members 90 defining a slot 94 therebetween. The plate member 72 further includes two locking lances 74. The shield member 70 is shown in Figure 5 as including a rear wall 78 extending from the plate member 72 with a semicircular shielding tail 76 extending from the rear wall 78. With reference again to Figure 2, the shield member 70 further includes integral sidewalls 80 having windows 84 and 86 stamped therefrom. The forward edges of the sidewalls 80 are defined by two 45 degree surfaces 82.

Shield member 100 is shown as including a plate member 102 with integral shielding portions 110 extending from the front edge thereof, the two shielding portions 110 defining a slot 112 therebetween. The shield member 100 further includes a rear wall portion 114 having a semicircular shield tail 116 extending from the rear wall 114. Plate member 102 further comprises locking lances 106, and tabs 104 and 108 extending from the side edges thereof.

With reference still to Figure 2, the premolded boot 120 includes a central body portion 122, a flexible portion 124 and a latching portion 126. Referring now to Figure 6A, the internal structure of the premolded boot generally includes a cable receiving bore 158, a cavity 156 and a connector receiving cavity 128. The cavity 156 is defined by an inner bore 160, while the connector receiving cavity 128 is defined by an upper surface 148, a lower surface 150 and sidewalls 162 (Figure 2). The upper surface 148 includes a transversely extending channel 140 therein having a forward edge 142 while the lower surface 150 has a transversely extending channel 144 therein with a forward edge 146. The latching mechanism 126 generally comprises a latching extension 130 and a latching extension 132. The latching extension 130 includes a single latching projection 134 having end surfaces 135 (Figure 2). The latching extension 132 includes two latching projections 136, the latching projections being spaced apart to define a slot 138 therebetween. The latching projections 134, 136 are defined as raised detents, the use and functioning of which will be described in greater detail herein.

With reference to Figure 2, the assembly further includes a ferrule 170 having semicircular portions 172 and collapsible portions 174. The data connector 4, as shown in Figure 2, is for interconnection to a shielded cable shown generally as 180. The shielded cable 180 includes outer insulation 182, a shielding

braid 184, inner insulation 188 and individual insulated conductors 186. An inner metallic ferrule 178 is profiled to be slidably received over the outer insulation 182.

To interconnect the shielded cable 180 to the data connector of the instant invention, the housing portion 5, of Figure 4, is first assembled. With the shorting bars 60 removed, the terminals 30 are slidably received in respective channels 12 until latched in place. The shorting bars 60 are then inserted in respective grooves 23, the shorting bars 60 contacting the commoning foot 38 on alternate terminals to common alternate terminals when the data connector 4 is in an unmated condition. It should be understood that to insert the shielded cable through the bore 158 of the premolded boot 120, the shielded cable must be in an unprepared condition, whereas the cable 180, as shown in Figure 2, is shown in a prepared condition. Said another way, the cable must be left unstripped so that the blunt end alone is inserted into the bore 158, similar to threading a needle. With the shielded cable 180 inserted through the bore 158 of the boot 120, the boot can be pulled back on the cable to allow room for preparation of the cable end. Prior to preparing the end of the shielded cable but subsequent to placing the premolded boot 120 onto the cable, the metal ferrule 178 having an inner diameter substantially the same as the outer diameter of the insulation 182 is slidably received over the cable 180. Also a collapsible ferrule 170 is slid over the end of the cable and is placed back upon the cable with the premolded boot for later use.

The end of the shielded cable can then be prepared by stripping a portion of the outer insulation from the end of the cable to expose a portion of the shield 184. The ferrule 178 is then placed adjacent to the end of the stripped insulation and the exposed shielding braid 184 is dressed over the ferrule 178, as shown in Figure 2. The inner insulation 188 is then stripped to expose the insulated conductors 186 and each individual wire 186 is placed in the stuffer cap through a respective slot 54, with the ends of the wire 186 extending into the barrels 56 through the slot 58. The stuffer cap 50 and the individual wire 186 are then placed over the insulative housing 5 such that ribs 52 on the stuffer cap 50 are aligned with channels 22 in the insulative housing 5, which in turn aligns the stuffer cap barrels 56 with the insulation displacement wire barrels 32 on the terminals 30. The stuffer cap 50 is then pushed downwardly until each of the individual conductors 186 is terminated within respective wire barrels 32 of terminals 30.

The shielded subassembly 2 is completed by installing the shield members 70 and 100 to the insulative housing 5. The shield member 70 is first inserted over the housing 5 such that windows 84 in the shield 70 overlie the ribs 20 of the housing 5. This places plate member 72 adjacent to the surface 26 of the housing and shield members 90 adjacent to surface 28 of the housing. Furthermore, and as shown in Figure 5, as installed, the rear wall 78 of the shield member lies adjacent to the rear of the connector housing 5 to substantially shield the housing member 5. This also places semicircular shielding tail 76 in an overlying relationship with the dressed braid 184, trapping the braid between the ferrule 178 and semicircular portion 76. The shield member 100 is next installed by placing forward shield members 110 through the windows 8 of the connector housing 5 such that the forward shield members 110 lie flush against the forward surfaces 24 and between the rib 25. The shield member 100 is latched in place by locking the tabs 104 into the windows 86 of the shield member 70. As shown in Figure 3, the tabs 108 overlap the shield sidewalls 80 to keep the tabs 104 and the windows 86 in a latched condition.

As installed, the plate member 102 of the shield member 100 overlies the terminals 30 within the connector housing 5. The rear wall 114 of the shield member 100 encloses the rear edge of the connector housing 5 with edge 115 of the rear wall 114 substantially adjacent to edge 79 (Figure 5) of rear wall 78 to totally enclose the connector housing. Also as installed, the semicircular shield tail 116 overlies and is substantially adjacent to the dressed braid and the backup ferrule 178. The previously installed ferrule 170 can then be slid forwardly to overlie the semicircular shield tails 76 and 116, and the ferrule 170 can be crimped to a configuration as shown in Figure 3. The collapsible ferrule provides for a permanent electrical connection between the shielding components, that is, the shielding braid 184 is trapped between the metal backup ferrule 178 and between the metallic shield tails 76 and 116.

With the individual conductors 186 terminated to the respective terminals 30, and with the shielded braid 184 commoned to the shielded subassembly 2, the shielded boot 120 can now be slid forwardly to encapsulate and insulate the shielded subassembly 2. The premolded boot 120 and the shielded subassembly 2 are pulled together until the rear walls 78, 114 of the shield members 70 and 100, respectively, abut the shoulders 152 and 154, respectively, within the premolded boot 120, as shown in Figure 6B. This disposes the crimp assembly of the collapsible ferrule within the cavity 156 and the shielded subassembly within the cavity 128. The cavity 128 is closely toleranced to receive the shielded subassembly 2, that is shield plate members 72 and 102 lie substantially flush with surfaces 148 and 150, respectively. Furthermore, the sidewalls 80 of the shield member 70 lie substantially flush with the inner sidewalls 162 of the premolded boot. As installed, the locking lances 74 and 106 are disposed within the transverse channels 140 and 144, respectively, and are latched against surfaces 142 and 146, respectively.

It should be understood that the assembly as previously described can be installed within the user's facility without any assembly equipment. At most, a pocket knife is required to strip the cable and a pair of pliers is required to push the stuffer cap down to terminate the insulated conductors. Data communication lines are installed within office buildings, or the like, much like the installation electrical power wiring, or telephone wire. Often new offices are modularly formed or new terminals are needed to compliment existing computer terminals. It is advantageous to have the ability to wire the data connectors at the facility without regard to the lengths of runs required in the cable lengths. When a new shielded cable is installed, the desired method is to run the cable through the walls or through channels in the flooring to dispose the ends of the shielded cable at the required locations. The ends of the shielded cables are then prepared and the data connectors installed.

A first advantage of the present invention is that the premolded one piece boot provides an economic advantage to the user, over previous prior art connectors. Second, the user can stock gross lengths of unprepared shielded cable, typically bought in rolls of hundreds of feet, and only terminate the shielded cable to data connectors when necessary. This method of stocking components is much easier and cost effective than stocking a large quantity of lengths of cable with preterminated data connectors at each end thereof. Third, the present invention allows the unprepared cable to be fed through small openings in the flooring or the walls which is an imperative requirement for the new installation of any type of wiring. Feeding the cable through openings would not be possible with a cable preterminated to a data connector.

Further advantages relate to the intermatability of the presently designed data connector. As assembled, the data connector 4 is matable with a hermaphroditic data connector 300, as shown in Figures 7 and 8. The data connector 300 shown in Figure 9 is generally of the type disclosed in U.S. Patents 4,449,778; 4,501,459; 4,508,415; 4,582,376; and 4,602,833; and in U.S. Patent Application Serial Numbers 773,730; 830,904; and 823,134; the disclosures of which are incorporated herein by reference.

As shown in Figure 7, the data connector is also interconnectable with a data connector 300. The latching mechanism of the data connector 300 includes a latch plate 320 and a latch plate 322. The forward end of the latch plate 320 includes a T-slot 302 defined by edges 304 and edges 306 defining a slot therebetween. A latching surface 308 is also defined within the T-slot 302. The latching projection 134 on the premolded boot 120 has end edges 135. The premolded boot 120 is profiled such that, upon mating of the data connector of the instant invention with the data connector 300, the latching extension 130 is slidably received under the latching plate 320 of the data connector 300. This disposes the latching projection 134 within the T-slot 302 with the edges 135 of the latching projection 134 between the end surfaces 304 of the T-slot 302 and the latching projection 134 behind latching surface 308 of the T-slot 302.

Referring now to Figure 8, the T-bar 310 is shown in greater detail. The T-bar 310 of the data connector 300 generally includes a bar portion 312 and an arm portion 314 interconnected to the plate portion 322. The bar portion 312 and the arm portion 314 defines a latching surface 316 on the back side of the bar portion 312. The latching projections 136 on the data connector of the instant invention define a slot 138 therebetween. When in the mated position, the T-bar 310 of the data connector 300 is latched with the projections 136, such that the arm portion 314 is disposed within the slot 138 with the latching surface 316 of the bar portion 312 behind the latching projections 136.

Furthermore, identical shielded subassemblies 2 can either be used with a communication outlet 200, such as that shown in Figure 9, or can be used with the premolded boot 120 previously described. A typical installation of the preferred embodiment of the invention would include an outlet 200 connected to the outside of a wall, within an office building, with data communication cable similar to the shielded cable 180 within the wall or under the floor, and terminated, as previously described, to a shielded subassembly 2. The shielded subassembly 2 would then be latchably received to the back of the communication outlet 200, as shown in Figure 9. The data connector 4, having an identical shielded subassembly 2 as in the communication outlet 200, is then matably received with the front face of the outlet 200 to interconnect resilient contact portions 36 of like terminals 30. Given that identical shielded subassemblies are required for either the data connector or the communication outlet 200, the component parts for the shielded subassembly can be easily stocked without a predetermined end to their use. Furthermore, the identical shielded subassemblies allow retrofitting of a previously assembled data connector into a communication outlet, or vice versa, a previously assembled communication outlet into a data connector.

Referring now to Figure 9, the outlet assembly of the instant invention, generally comprises a shielded subassembly 2, an unshielded connector 290 and an outlet wallplate 200, the shielded subassembly 2 and the unshielded connector 290 each being receivable into and out of the outlet wallplate 200 and being latchably attached therein. It should be noted that the shielded subassembly 2 is identical to that above described.

Referring again to Figure 9, the wallplate 200 is shown as including a data connector interface 202 and a modular plug interface 280. The wall outlet 200

is a one-piece molded housing and is used for interconnecting from the rear a shielded subassembly 2 and a modular jack 290. With reference now to Figure 10, the data connector interface 202 is shown in greater detail .

The interface 202 generally comprises a shroud member 204 forming a peripheral wall surrounding the data connection opening to partially insulate the electrical connection between the two mating electrical components. The shroud member 204 defines an internal upper surface 212, a lower surface 214 and side surfaces 210 and 208. Also within the periphery of the shroud 204 are back wall sections 216, 250 and 218 each of which is planar with the wallplate face 206. In between the wall portion 216 and 250 is an opening defined by edges 266 of rear wall 216, edge 268 of rear wall 250 and the upper 212 and lower 214 surfaces. This opening is defined to allow the entry from the rear of the shielded subassembly 2 as will be described in more detail subsequently. Extending from the upper 212 and lower 214 surfaces are latching edges 260 which extend into the opening.

Also within the periphery of the shroud member 204 is a T-bar member 220 and a T-slot member 240. The T-bar 220 and the T-slot 240 are profiled to simulate the T-bar and T-slot of the data connectors as previously described, for example in U.S. Patent 4,501,459. Referring first to the T-bar member 220, the member generally includes a bar member 224 interconnected to the internal surface 210 and to the rear wall 216 via an integral molded web 222, as shown in Figures 10 and 11. As best shown in Figure 11, the rear surface of the bar 224 defines a latching surface 226 while the ends of the bar 224 form end walls 228. As best shown in Figure 10, directly behind the latching surfaces 226 of the bar 224 and defined in the rear wall 216 is a pair of apertures 230 which extend through the wall and are generally defined by the retractable pins which define the latching surfaces 226 during the molding process.

Referring now to Figures 10 and 11, the detail of the T-slot will be described in greater detail. Referring first to Figure 12, the T-slot extends between upper surface 212 and lower surface 214 and is integrally molded therein via webs 254. The rear portion of the T-slot is integrally molded with the back wall portion 250 via integral portions 249. The integral web portions 254 define internal sidewalls 246 which extend from the outer edge of the web to the rear wall 250. The integral web portions 249 each have an arm 242 extending therefrom towards the center of the interface. Each of the arms is spaced from each other as defined by end surfaces 244 which also define a slot therebetween. The rear edge of the arms 242 each define a latching surface 252.

Referring again to Figure 9, the assembly there shown further includes a latchable modular jack 290 which generally includes a latching structure 292 having a latching surface 296, a modular plug interface 294 and an insulation displacement stuffer cap 298. The wallplate 200, in turn, includes a modular plug interface 280 having an opening 282 which is normally covered by a spring loaded door 286. Referring now to Figure 13, the cross-sectional view through the modular jack interface clearly depicts the latching surfaces 284 disposed at the rear side of the wallplate behind the opening 282.

With the shielded subassembly assembled as previously described, the shielded subassembly 2 is interconnectable into the opening from the rear side of the data communication interface 202. Referring first to Figure 14, as installed the latches 88 of the shield side walls 80 lock behind the latching surfaces 260 within the opening. Also as shown in Figure 15, as installed the latches 74 and 106 cooperatively abut rear surfaces 272 and 270 respectively maintaining the shielded subassembly in a fixed position within the wallplate. In this configuration, the shielded subassembly is disposed relative to the T-slot and T-bar for matability with a data connector of the type having a T-bar and T-slot, such as the data connector 4, as illustrated in figures 16 and 17.

As shown in Figure 18, the outlet 200 is also interconnectable with a data connector 300. The latching mechanism of the data connector 300 includes latch plates 320 and 322. The forward end of the latch plate 320 includes a T-bar 310 having latching surfaces 316 while the forward end of the latch plate 322 includes a T-slot 302 having latching surfaces 308. As shown in Figure 18, the latch plates 320 and 322 are interconnected to the insulative housing portions via web portions 330 and 332, such that the plates may be squeezed at the outer end thereof to move the respective plates away from the insulative housing. In this manner, the data connector can be inserted into the outlet interface such that the T-bar 310 is placed over the T-slot 240 and the T-slot 302 is placed under the T-bar 220.

## Claims

1. An electrical connector (4) for interconnection to a shielded cable (180), including an insulative housing (5), which houses a plurality of electrical terminals (30), shielding means (70,100) substantially surrounding the housing (5), and an insulative cover means (120) for the shielding means (70,100), the housing (5) including a terminal support floor (10) and sidewalls (14) extending upwardly therefrom, the terminal support floor (10) including terminal receiving means (12) for receipt of the terminals (30), each said terminal (30) having a resilient contact portion (36) and a wire termination means (32); the connector (4) being characterized in that the insulative cover

means (120) is profiled as a premolded insulative boot means slidably receivable over the insulative housing (5) and the shielding means (70,100) and at least partially encapsulating said insulative housing (5) and said shielding means (70,100) therein.

2. The connector of claim 1, characterized in that the shielding means (70,100) has shielding plate means (72,102) positioned adjacent to the insulative housing (5) and an opening (76,116) therethrough for the receipt of a shielding braid (184) of the shielded cable (180), and in that an opening (158) in the boot means is in substantial alignment with the opening (76,116) in said shielding means.

3. The connector of claim 2, characterized by means for commoning the cable shielding braid (184) with the shielding means (70,100).

4. The connector of claim 3, characterized in that the commoning means is positioned within the boot means.

5. The connector of claim 2, 3 or 4, characterized in that the insulative housing (5) is secured within the boot means (120).

6. The connector of any of claims 2 to 6, characterized in that the opening (158) is substantially smaller than the profile of the housing (5).

7. The connector of any of claims 2 to 6, characterized in that a first wall portion of the housing (5) is defined by a wall member (26) and a surface (28), the wall member (26) defining a stepped portion, and in that the shielding plate means comprises a first plate portion (72) for positioning adjacent to the wall member (26), and shielding contact members (90) for positioning against said surface (28).

8. The connector of claim 7, characterized in that the housing (5) has an open upper face through which the wire termination means (32) of the terminals (30) are accessible, and the shielding plate means has a second plate portion (102) which overlies the open upper face.

9. The connector of claim 8, characterized by an insulative body member (50) positioned between the second shielding plate portion (102) and the wire termination means (32) of the terminals (30).

10. The connector of claim 8 or 9, characterized in that the second shielding plate portion (102) includes shielding contact members (110) projecting forwardly therefrom.

11. The connector of claim 8, 9 or 10, characterized in that the plate portions (72,102) are positioned against inner surfaces (148,150) of a body portion (122) of the boot means.

12. The connector of any of claims 2 to 6, characterized is that the insulative housing (5) is substantially rectangular, and the shielding plate means (72,102) is positioned over an open face of the housing and over an opposing side (28), said boot means (120) having a body portion (122) with a rectangular shaped connector receiving cavity (128) profiled to receive the insulative housing (5) with the shielding means (70,100) assembled to the housing (5).

13. The connector of claim 11 or 12, characterized in that latching extensions (130,132) project forwardly from the body portion (122).

14. The connector of claims 10, 11 and 13, characterized in that the latching extensions (130,132) overlie the shielding contact members (90,110).

15. The connector of any preceding claim, characterized in that the housing portion (5) is hermaphroditic, such that two identical housing portions (5) are interconnectable when the mating faces of the two housing portions are relatively rotated about an axial centerline by 180°.

16. The connector of claims 14 and 15, characterized in that one of the latching extensions (130) is spaced above the adjacent shielding contact members (90), thereby allowing the hermaphroditic electrical connection to another complementary electrical connector.

17. The connector of any preceding claim, characterized in that the shielding means (72,102) is latched to the insulative housing (5).

18. The connector of any preceding claim, characterized in that the shielding means (70,100) comprises a first (70) and a second (100) shield member, where the first shield member (70) and the insulative housing (5) cooperatively include means (20,84) for attaching the first shield member (70) to the insulative housing (5), and the first (70) and second (100) shield members cooperatively include means (86,104) for attaching the second shield member (100) to the first shield member (70).

19. The connector of claim 1, characterized in that the premolded boot means (120) includes a cable

receiving portion (124), a central body portion (122) and a latching portion (126), said cable receiving portion (124) including an opening (158) therein substantially the same size as the diameter of the cable (180).

**20.** The connector of claim 1, characterized in that the shielding means (70,100) includes a first (70) and a second (100) shield member, each of the shield members (70,100) including means (76,116) for commoning the first (70) and second (100) shield members to a shielded braid (184) of the shielded cable (180).

**21.** The connector of claim 20, characterized in that the commoning means (76,116) includes semicircular extensions extending from the first (70) and second (100) shield members.

**22.** The connector of claim 21, characterized in that a collapsible ferrule (170) is slidably receivable over the semicircular extensions (76,116), whereby

when the shielded cable (180) is prepared by stripping a portion of the insulation (182) to expose the shielding braid (184) of the cable (180), dressing the shielding braid (184) back over the insulation (182), placing the semicircular extensions (76,116) over the dressed cable shield (184) and crimping the collapsible ferrule (170) over the semicircular extensions (76,116), the shielding braid (184) of the cable is commoned to the first (70) and second (100) shield members.

**23.** The connector of any preceding claim, characterized in that the premolded boot (120) and the shielding means (70,100) cooperatively include means (74,106,140,144) for latchably attaching the premolded boot (120) onto the shielding means (70,100).

**24.** The connector of claim 1, characterized in that the shielding means (70,100) comprises a first (70) and second (100) shield members, the first shield member (70) including a portion (72) for surrounding the exterior of the terminal platform (10), and integral sidewalls (80) for surrounding the exterior of the housing sidewalls (14), and the second shield member (100) includes a plate portion (102) for overlying the open upper face of the housing (5).

**25.** The connector of claim 24, characterized in that the two sidewalls (80) of the first shield member (70) upstand from the shield portion (72) and have upper edges which upstand higher than the sidewalls (14) of the housing (5), the plate portion (102) of the second shield member (100) including at least one first tab member (108) extending from each side edge of the plate portion (102), the first tab members (108) engaging the upper edges of the first shield member sidewalls (70), thereby limiting the downward movement of the second shield member (100).

**26.** The connector of claim 1, characterized in that the shielding means includes a first (70) and second (100) shield members assembled to the insulative housing (5),

said first shield member (70) including a base wall (72) disposed adjacent the exterior of the terminal support floor (10), two sidewalls (80) upstanding from the base wall (72) and having upper edges which upstand higher than the sidewalls (14) of the housing, and two contact portions (90) extending from the front edge thereof which lie adjacent to the terminal support floor (10); and

said second shield member (100) including a plate portion (102) having two shield contact portions (110) extending from a front edge of the plate portion (102), the plate portion (102) of the second shield member (100) including at least one first tab member (108) extending from each of a side edge of the plate portion (102), the first tab members (108) engaging the upper edges of the first shield member sidewalls (80), thereby limiting the downward movement of the second shield member (100).

**27.** The connector of claim 25 or 26, wherein the side edges of the second shield member (100) include second tab members (104) and the sidewalls (80) of the first shield member (70) include apertures (86) therethrough receiving the second tab members (104).

**28.** The connector of claim 25, 26 or 27, wherein the first tab members (108) are bent over to lie adjacent to the sidewalls (80) of the first shield member (70).

**29.** The connector of claim 25, 26, 27 or 28, including an outlet means (200) which comprises an opening for receiving the housing (5) and shielding means (70,100) from the rear, and means for attaching the latch means of a matable data connector (4,300) thereto, the attaching means maintaining the respective terminals of the data connector (4,300) and the housing (5) in an electrically interconnected configuration.

**30.** The electrical connector of claim 29, wherein the outlet means (200) performs as a local area network interface which receives a matable hermaphroditic data connector (300) from the front

thereof, the data connector (300) having a latching profile including a T-bar (310) and a T-slot (302) , and a plurality of hermaphroditic electrical terminals therein including resilient contact portions, and the outlet means (200) receives from the rear, the housing (5) and shielding means (70,100) which are latchable to the outlet means (200) and includes a like plurality of terminals, the outlet means (200) comprising a one piece molded body including latching means for the housing (5) and shielding means (70,100) and an integrally molded T-bar (220) and T-slot (240) interconnectable with the respective T-slot (302) and T-bar (310) of the data connector (300), the molded body being profiled to position the electrical terminals (30) of the housing (5) in an overlapping and mating relationship with like terminals in the data connector (300) when the T-bar (220) of the outlet means (200) is in a latched configuration with the T-slot (302) of the data connector (300), and when the T-slot (240) of the outlet means (200) is in a latched configuration with the T-bar (310) of the data connector (300).

**Patentansprüche**

1. Elektrischer Verbinder (4) zum Anschließen an einem abgeschirmten Kabel (180), mit einem Isoliergehäuse (5), das eine Vielzahl von elektrischen Anschlüssen (30) enthält, mit Abschirmmitteln (70, 100), die im wesentlichen das Gehäuse (5) umgeben, und mit einem Isolierabdeckmittel (120) für das Abschirmmittel (70, 100), wobei das Gehäuse (5) einen Anschlußabstützboden (10) und Seitenwände (14) aufweist, die sich von dort nach oben erstrecken, der Anschlußabstützboden (10) Anschlußaufnahmemittel (12) zur Aufnahme der Anschlüsse (30) aufweist, jeder Anschluß (30) einen nachgiebigen Kontaktabschnitt (36) und ein Drahtanschlußmittel (32) aufweist, wobei der Verbinder (4) **dadurch gekennzeichnet** ist, daß das Isolierabdeckmittel (120) als ein vorgeformtes Isolierhaubenmittel profiliert ist, das über dem Isoliergehäuse (5) und dem Abschirmmittel (70, 100) verschiebbar aufnehmbar ist und das mindestens teilweise das Isoliergehäuse (5) und das Abschirmmittel (70, 100) darin aufnimmt.

2. Verbinder nach Anspruch 1, **dadurch gekennzeichnet**, daß das Abschirmmittel (72, 100) ein Abschirmplattenmittel (70, 102), das in der Nähe des Isoliergehäuses (5) angeordnet ist, und eine durchgehende Öffnung (76, 116) zur Aufnahme eines Abschirmgeflechts (184) des abgeschirmten Kabels (180) aufweist, und daß eine Öffnung (158) in dem Haubenmittel mit der Öffnung (76, 116) in dem Abschirmmittel fluchtet im wesentlichen.

3. Verbinder nach Anspruch 2, **gekennzeichnet durch** ein Mittel zum Verbinden des Kabelabschirmgeflechts (184) mit dem Abschirmmittel (70, 100).

4. Verbinder nach Anspruch 3, **dadurch gekennzeichnet**, daß das Verbindungsmittel innerhalb des Haubenmittels angeordnet ist.

5. Verbinder nach Anspruch 2, 3 oder 4, **dadurch gekennzeichnet**, daß das Isoliergehäuse (5) innerhalb des Haubenmittels (120) befestigt ist.

6. Verbinder nach irgendeinem der Ansprüche 2 bis 6, **dadurch gekennzeichnet**, daß die Öffnung (158) im wesentlichen kleiner als das Profil des Gehäuses (5) ist.

7. Verbinder nach irgendeinem der Ansprüche 2 bis 6, **dadurch gekennzeichnet**, daß ein erster Wandbereich des Gehäuses (5) durch ein Wandteil (26) und eine Fläche (28) begrenzt ist, wobei das Wandteil (26) einen gestuften Bereich bildet, und daß das Abschirmplattenmittel einen ersten Plattenbereich (72) zur Anordnung in der Nähe des Wandteils (26) und Abschirmkontaktteile (90) zur Anordnung gegen die Fläche (28) aufweist.

8. Verbinder nach Anspruch 7, **dadurch gekennzeichnet**, daß das Gehäuse (5) eine offene obere Fläche aufweist, durch die die Drahtanschlußmittel (32) der Anschlüsse (30) zugänglich sind, und daß das Abschirmplattenmittel einen zweiten Plattenbereich (102) aufweist, der über der oberen offenen Fläche liegt.

9. Verbinder nach Anspruch 8, **gekennzeichnet durch** ein Isolierkörperteil (50), das zwischen dem zweiten Abschirmplattenbereich (102) und dem Drahtanschlußmittel (32) der Anschlüsse (30) angeordnet ist.

10. Verbinder nach Anspruch 8 oder 9, **dadurch gekennzeichnet**, daß der zweite Abschirmplattenbereich (102) Abschirmkontaktteile (110) aufweist, die von dort aus nach vorn vorstehen.

11. Verbinder nach Anspruch 8, 9 oder 10, **dadurch gekennzeichnet**, daß die Plattenbereiche (72, 102) gegen Innenflächen (148, 150) eines Körperbereichs (122) des Haubenmittels angeordnet sind.

12. Verbinder nach irgendeinem der Ansprüche 2 bis

6, **dadurch gekennzeichnet**, daß das Isoliergehäuse (5) im wesentlichen rechteckig ist und daß das Abschirmplattenmittel (72, 102) über einer offenen Fläche des Gehäuses und über einer gegenüberliegenden Seite (28) angeordnet ist, wobei das Haubenmittel (120) einen Körperbereich (122) mit einem rechteckig gestalteten Verbinderaufnahmehohlraum (128) zur Aufnahme des Isoliergehäuses (5) mit dem an dem Gehäuse (5) angebauten Abschirmmittel (70, 100) profiliert ist.

**13.** Verbinder nach Anspruch 11 oder 12, **dadurch gekennzeichnet**, daß Verrastungsverlängerungen (130, 132) von dem Körperbereich (122) aus nach vorn vorstehen.

**14.** Verbinder nach den Ansprüchen 10, 11 und 13, **dadurch gekennzeichnet**, daß die Verrastungsverlängerungen (130, 132) über den Abschirmkontaktteilen (90, 110) liegen.

**15.** Verbinder nach irgendeinem vorhergehenden Anspruch, **dadurch gekennzeichnet**, daß der Gehäusebereich (5) zwitterartig derart ist, daß zwei identische Gehäusebereiche (5) miteinander verbindbar sind, wenn die Fügeflächen der beiden Gehäusebereiche um eine axiale Mittellinie um 180° relativ zueinander verschwenkt werden.

**16.** Verbinder nach Anspruch 14 und 15, **dadurch gekennzeichnet**, daß eine der Verrastungsverlängerungen (130) in einem Abstand über den benachbarten Abschirmkontaktteilen (90) angeordnet ist, wodurch die elektrische Zwitterverbindung mit einem weiteren komplementären elektrischen Verbinder ermöglicht ist.

**17.** Verbinder nach irgendeinem vorhergehenden Anspruch, **dadurch gekennzeichnet**, daß das Abschirmmittel (72, 102) an dem Isoliergehäuse (5) verrastet ist.

**18.** Verbinder nach irgendeinem vorhergehenden Anspruch, **dadurch gekennzeichnet**, daß das Abschirmmittel (70, 100) ein erstes (70) und ein zweites (100) Abschirmteil aufweist, wobei das erste Abschirmteil (70) und das Isoliergehäuse (5) zusammenarbeitende Mittel (20, 84) zur Befestigung des ersten Abschirmteils (70) an dem Isoliergehäuse (5) aufweisen, und das erste (70) und das zweite (100) Abschirmteil zusammenarbeitend Mittel (86, 104) zur Befestigung des zweiten Abschirmteils (100) an dem ersten Abschirmteil (70) aufweisen.

**19.** Verbinder nach Anspruch 1, **dadurch gekennzeichnet**, daß das vorgeformte Haubenmittel (120) einen Kabelaufnahmebereich (124), einen zentralen Körperbereich (122) und einen Verrastungsbereich (126) aufweist, wobei der Kabelaufnahmebereich (124) eine darin befindliche Öffnung (158) im wesentlichen der gleichen Größe wie der Durchmesser des Kabels (180) aufweist.

**20.** Verbinder nach Anspruch 1, **dadurch gekennzeichnet**, daß das Abschirmmittel (70, 100) ein erstes (70) und ein zweites (100) Abschirmteil aufweist, wobei jedes der Abschirmteile (70, 100) ein Mittel (76, 116) zum Verbinden des ersten (70) und des zweiten (100) Abschirmteils mit einem abgeschirmten Geflecht (184) des abgeschirmten Kabels (180) aufweist.

**21.** Verbinder nach Anspruch 20, **dadurch gekennzeichnet**, daß das Verbindungsmittel (76, 116) halbkreisförmige Verlängerungen aufweist, die sich von dem ersten (70) und zweiten (100) Abschirmteil aus erstrecken.

**22.** Verbinder nach Anspruch 21, **dadurch gekennzeichnet**, daß eine zusammendrückbare Hülse (170) über den halbkreisförmigen Verlängerungen (76, 116) verschiebbar aufnehmbar ist, wodurch
wenn das abgeschirmte Kabel (180) durch Streifenbildung eines Bereichs der Isolierung (182) zum Freilegen des Abschirmgeflechts (184) des Kabels (180), durch Zurückschlagen des Abschirmungsgeflechts (184) über die Isolierung (182), durch Anordnen der halbkreisförmigen Verlängerungen (76, 116) über der zurückgeschlagenen Kabelabschirmung (184) und durch Krimpen der zusammendrückbaren Hülse (170) über die halbkreisförmigen Verlängerungen (76, 116) vorbereitet ist, das Abschirmungsgeflecht (184) des Kabels mit den ersten (70) und zweiten (100) Abschirmteilen verbunden ist.

**23.** Verbinder nach irgendeinem der vorhergehenden Anspruch, **dadurch gekennzeichnet**, daß die vorgeformte Haube (120) und das Abschirmmittel (70, 100) zusammenarbeitend Mittel (74, 106, 140, 144) zum rastbaren Befestigen der vorgeformten Haube (120) an dem Abschirmmittel (70, 100) aufweisen.

**24.** Verbinder nach Anspruch 1, **dadurch gekennzeichnet**, daß das Abschirmmittel (70, 100) ein erstes (70) und ein zweites (100) Abschirmteil aufweist, wobei das erste Abschirmteil (70) einen Bereich (72) zum Umgeben des Äußeren der Anschlußplattform (10) und einstückige Seitenwände (80) zum Umgeben des Äußeren der Gehäusewände (14) aufweist und das zweite Abschirm-

teil (100) einen Plattenbereich (102) zum Ablegen über der offenen oberen Oberfläche des Gehäuses (5) aufweist.

**25.** Verbinder nach Anspruch 24, **dadurch gekennzeichnet**, daß die beiden Seitenwände (80) des ersten Abschirmteils (70) von dem Abschirmbereich (72) aus nach oben hochstehen und obere Ränder aufweisen, die höher als die Seitenwände (14) des Gehäuses (5) nach oben hochstehen, wobei der Plattenbereich (102) des zweiten Abschirmteils (100) mindestens ein erstes Ansatzteil (108) aufweist, das sich von jedem Seitenrand des Plattenbereichs (102) aus erstreckt, wobei die ersten Ansatzteile (108) die oberen Ränder der ersten Abschirmteilseitenwände (70) berühren, wodurch die nach unten gerichtete Bewegung des zweiten Abschirmteils (100) begrenzt ist.

**26.** Verbinder nach Anspruch 1, **dadurch gekennzeichnet,** daß das Abschirmmittel ein erstes (70) und zweites (100) Abschirmteil aufweist, die an dem Isoliergehäuse (5) angebaut sind,
wobei das erste Abschirmteil (70) eine Basiswand (72), die in der Nähe des Äußeren des Anschlußabstützbodens (10) angeordnet ist, zwei Seitenwände (80), die von der Bodenwand (72) aus hochstehen und obere Ränder aufweisen, die höher als die Seitenwände (14) des Gehäuses hochstehen, und zwei Kontaktbereiche (90) aufweist, die sich von dessen vorderen Rand aus erstrecken und in der Nähe des Anschlußabstützbodens (10) liegen, und wobei der das zweite Abschirmteil (100) einen Plattenbereich (102) mit zwei Abschirmkontaktbereichen (110) aufweist, die sich von einem vorderen Rand des Plattenbereichs (102) aus erstrecken, wobei der Plattenbereich (102) des zweiten Abschirmteils (100) mindestens ein erstes Ansatzteil (108) aufweist, das sich von jedem Seitenrand des Plattenbereichs (102) aus erstreckt, wobei die ersten Ansatzteile (108) die oberen Ränder der ersten Abschirmteilseitenwände (80) berühren, wodurch die nach unten gerichtete Bewegung des zweiten Abschirmteils (100) begrenzt ist.

**27.** Verbinder nach Anspruch 25 oder 26, wobei die Seitenränder des zweiten Abschirmteils (100) zweite Ansatzteile (104) und die Seitenwände (80) des ersten Abschirmteils (70) Durchgangsöffnungen (86) zur Aufnahme der zweiten Ansatzteile (104) aufweisen.

**28.** Verbinder nach Anspruch 25, 26 oder 27, wobei die ersten Ansatzteile (108) umgebogen sind, um in der Nähe der Seitenwände (80) des ersten Abschirmteils (70) zu liegen.

**29.** Verbinder nach Anspruch 25, 26, 27 oder 28, mit einem Auslaßmittel (200),das eine Öffnung zur Aufnahme des Gehäuses (5) und des Abschirmmittels (70, 100) von hinten aufweist, und mit Mitteln zur dortigen Befestigung des Verrastungsmittels eines fügbaren Datenverbinders (4, 300), wobei das Befestigungsmittel die jeweiligen Anschlüsse des Datenverbinders (4, 300) und das Gehäuse (5) in einer elektrischen Verbindungskofiguration hält.

**30.** Elektrischer Verbinder nach Anspruch 29, wobei das Auslaßmittel (200) als eine Schnittstelle eines örtlichen Netzwerks arbeitet, die einen zwitterartigen Datenfügeverbinder (300) von ihrer Vorderseite aus aufnimmt, wobei der Datenverbinder (300) ein Verrastungsprofil mit einer T-Stange (310) und einem T-Schlitz (302) und einer Vielzahl von darin befindlichen zwitterartigen elektrischen Anschlüssen aufweist, die nachgiebige Kontaktbereiche aufweisen und, wobei das Auslaßmittel (200) von hinten aus das Gehäuse (5) und das Abschirmmittel (70, 100) aufnimmt, die an dem Auslaßmittel (200) verrastbar sind, und eine gleiche Vielzahl von Anschlüssen aufweist, wobei das Auslaßmittel (200) einen einstückig geformten Körper mit Verrastungsmitteln für das Gehäuse (5) und das Abschirmmittel (70, 100) und eine einstückig geformte T-Stange (220) und einen T-Schlitz (240) aufweist, die mit dem jeweiligen T-Schlitz (302) und der T-Stange (310) des Datenverbinders (300) verbindbar sind, wobei der geformte Körper in Hinblick darauf profiliert ist, die elektrischen Anschlüsse (30) des Gehäuses (5) in einer überlappenden und fügenden Beziehung mit gleichen Anschlüssen bei dem Datenverbinder (300) anzuordnen, wenn die T-Stange (220) des Auslaßmittels (200) in verrasteter Konfiguration mit dem T-Schlitz 302 des Datenverbinders (300) steht, und wenn der T-Schlitz 240 des Auslaßmittels (200) in einer verrasteten Konfiguration mit der T-Stange (310) des Datenverbinders (300) steht.

## Revendications

**1.** Connecteur électrique (4) pour une interconnexion avec un câble blindé (180), comprenant un boîtier isolant (5) qui renferme plusieurs bornes électriques (30), des moyens de blindage (70, 100) entourant sensiblement le boîtier (5), et un moyen à capot isolant (120) pour les moyens de blindage (70, 100), le boîtier (5) comprenant une base (10) de support de bornes et des parois latérales (14) qui s'en élèvent, la base (10) de support de bornes comprenant des moyens (12) de réception de bornes destinés à recevoir les

bornes (30), chacune desdites bornes (30) ayant une partie élastique (36) de contact et un moyen (32) de terminaison de fil ; le connecteur (4) étant caractérisé en ce que le moyen à capot isolant (120) est profilé sous la forme d'un moyen à manchon isolant prémoulé pouvant être reçu de façon coulissante sur le boîtier isolant (5) et les moyens de blindage (70, 100) et encapsulant au moins partiellement ledit boîtier isolant (5) et lesdits moyens de blindage (70, 100), à l'intérieur.

**2.** Connecteur selon la revendication 1, caractérisé en ce que les moyens de blindage (70, 100) comprennent un moyen à plaque de blindage (72, 102) positionné de façon à être adjacent au boîtier isolant (5) et une ouverture (76, 116) qui le traverse pour la réception d'une tresse de blindage (184) du câble blindé (180), et en ce qu'une ouverture (158) dans le moyen à manchon est sensiblement en alignement avec l'ouverture (76, 116) desdits moyens de blindage.

**3.** Connecteur selon la revendication 2, caractérisé par un moyen pour mettre en commun la tresse (184) du blindage du câble avec les moyens de blindage (70, 100).

**4.** Connecteur selon la revendication 3, caractérisé en ce que les moyens de mise en commun sont positionnés à l'intérieur du moyen à manchon.

**5.** Connecteur selon la revendication 2, 3 ou 4, caractérisé en ce que le boîtier isolant (5) est fixé à l'intérieur du moyen à manchon (120).

**6.** Connecteur selon l'une quelconque des revendications 2 à 5, caractérisé en ce que l'ouverture 158 est sensiblement plus petite que le profil du boîtier (5).

**7.** Connecteur selon l'une quelconque des revendications 2 à 6, caractérisé en ce qu'une première partie de paroi du boîtier (5) est définie par un élément de paroi (26) et une surface (28), l'élément de paroi (26) définissant une partie épaulée, et en ce que le moyen à plaque de blindage comprend une première partie de plaque (72) destinée à être positionnée à proximité immédiate de l'élément de paroi (26), et des éléments de contact de blindage (90) pour un positionnement contre ladite surface (28).

**8.** Connecteur selon la revendication 7, caractérisé en ce que le boîtier (5) présente une face supérieure ouverte à travers laquelle les moyens (32) de terminaison de fil des bornes (30) sont accessibles, et le moyen à plaque de blindage comporte une seconde partie de plaque (102) qui s'étend au-dessus de la face supérieure ouverte.

**9.** Connecteur selon la revendication 8, caractérisé par un élément de corps isolant (50) positionné entre la seconde partie à plaque de blindage (102) et les moyens (32) de terminaison de fil des bornes (30).

**10.** Connecteur selon la revendication 8 ou 9, caractérisé ce que la seconde partie de plaque de blindage (102) comprend des éléments de contact de blindage (110) qui en font saillie vers l'avant.

**11.** Connecteur selon la revendication 8, 9 ou 10, caractérisé ce que les parties de plaque (2, 102) sont positionnées contre des surfaces intérieures (148, 150) d'une partie de corps (122) du moyen à manchon.

**12.** Connecteur selon l'une quelconque des revendications 2 à 6, caractérisé en ce que le boîtier isolant (5) est sensiblement rectangulaire, et le moyen à plaque de blindage (72, 102) est positionné au-dessus d'une face ouverte du boîtier et au-dessus d'un côté opposé (28), ledit moyen à manchon (120) ayant une partie de corps (122) présentant une cavité (128) de forme rectangulaire pour la réception d'un connecteur, profilée pour recevoir le boîtier isolant (5) avec les moyens de blindage (70, 100) assemblés sur le boîtier (5).

**13.** Connecteur selon la revendication 11 ou 12, caractérisé en ce que les saillies de verrouillage (130, 132) dépassent en avant de la partie de corps (122).

**14.** Connecteur selon la revendication 10, 11 et 13, caractérisé en ce que les saillies de verrouillage (130, 132) s'étendent au-dessus des éléments de contact de blindage (90, 110).

**15.** Connecteur selon l'une quelconque des revendications précédentes, caractérisé en ce que la partie de boîtier (5) est hermaphrodite, afin que deux parties de boîtier identiques puissent être interconnectées lorsque les faces d'accouplement des deux parties de boîtier sont tournées l'une par rapport à l'autre autour d'un axe central sur 180°.

**16.** Connecteur selon les revendications 14 et 15, caractérisé en ce que l'une des saillies (130) de verrouillage est espacée au-dessus des éléments de contact de blindage adjacents (90), afin de permettre la connexion électrique hermaphrodite sur un autre connecteur électrique complémentaire.

17. Connecteur selon l'une quelconque des revendications précédentes, caractérisé en ce que le moyen de blindage (72, 102) est verrouillé sur le boîtier isolant (5).

18. Connecteur selon l'une quelconque des revendications précédentes, caractérisé en ce que les moyens de blindage (70, 100) comprennent des premier (70) et second (100) éléments de blindage, le premier élément de blindage (70) et le boîtier isolant (5) comprenant de façon coopérante des moyens (20, 84) destinés à relier le premier élément de blindage (70) au boîtier isolant (5), et les premier (70) et second (100) éléments de blindage comprenant de façon coopérante des moyens (86, 104) destinés à relier le second élément de blindage (100) au premier élément de blindage (70).

19. Connecteur selon la revendication 1, caractérisé en ce que le moyen à manchon prémoulé (120) comprend une partie (124) de réception de câble, une partie de corps centrale (122) et une partie de verrouillage (126), ladite partie (124) de réception de câble présentant une ouverture (158) ayant sensiblement la même dimension que le diamètre du câble (180).

20. Connecteur selon la revendication 1, caractérisé en ce que les moyens de blindage (70, 100) comprennent des premier (70) et second éléments (100) de blindage, chacun des éléments (70, 100) de blindage comprenant des moyens (76, 116) pour la mise en commun des premier (70) et second éléments (100) de blindage avec une tresse blindée (184) du câble blindé (180).

21. Connecteur selon la revendication 20, caractérisé en ce que les moyens (70, 116) de mise en commun comprennent des saillies semi-circulaires dépassant des premier (70) et second (100) éléments de blindage.

22. Connecteur selon la revendication 21, caractérisé en ce qu'une virole compressible (170) peut être reçue de façon coulissante sur les saillies semi-circulaires (76, 116), grâce à quoi

lorsque le câble blindé (180) est préparé par enlèvement d'une partie de l'isolant (182) pour mettre à nu la tresse de blindage (184) du câble (180), rabattement de la tresse de blindage (184) sur l'isolant (182), mise en place des saillies semi-circulaires (76, 116), sur la tresse de câble rabattue (184) et sertissage de la virole compressible (170) sur les saillies semi-circulaires (76, 116), la tresse de blindage (184) du câble est mise en commun avec les premier (70) et second (100) éléments de blindage.

23. Connecteur selon l'une quelconque des revendications précédentes, caractérisé en ce que le manchon prémoulé (120) et les moyens de blindage (70, 100) comprennent de façon coopérante des moyens (74, 106, 140, 144) pour relier de façon verrouillable le manchon prémoulé (120) sur les moyens de blindage (70, 100).

24. Connecteur selon la revendication 1, caractérisé en ce que les moyens de blindage (70, 100) comprennent des premier (70) et second (100) éléments de blindage, le premier élément de blindage (70) comprenant une partie (72) destinée à entourer l'extérieur de la plate-forme (10) à bornes, et des parois latérales intégrées (80) destinées à entourer l'extérieur des parois latérales (14) du boîtier, et le second élément de blindage (100) comprend une partie de plaque (102) destinée à s'étendre au-dessus de la face supérieure ouverte du boîtier (5).

25. Connecteur selon la revendication 24, caractérisé en ce que les deux parois latérales (80) du premier élément de blindage (70) s'élèvent de la partie de blindage (72) et ont des bords supérieurs qui s'élèvent plus haut que les parois latérales (14) du boîtier (5), la partie de plaque (102) du second élément de blindage (100) comprenant au moins un premier élément à patte (108) faisant saillie de chaque bord latéral de la partie de plaque (102), les premiers éléments à pattes (108) engageant les bords supérieurs des parois latérales (70) du premier élément de blindage, afin de limiter le mouvement de descente du second élément de blindage (100).

26. Connecteur selon la revendication 1, caractérisé en ce que les moyens de blindage comprennent des premier (70) et second (100) éléments de blindage assemblés sur le boîtier isolant (5),

ledit premier élément de blindage (70) comprenant une paroi de base (72) disposée de façon à être adjacente à l'extérieur de la base (10) de support de bornes, deux parois latérales (80) s'élevant de la paroi de base (72) et ayant des bords supérieurs qui s'élèvent plus haut que les parois latérales (14) du boîtier, et deux parties de contact (90) faisant saillie de son bord avant, qui s'étendent de façon à être adjacente à la base (10) de support de bornes ; et

ledit second élément de blindage (100) comprenant une partie de plaque (102) ayant deux parties de contact de blindage (110) qui font saillie d'un bord avant de la partie de plaque (102), la partie de plaque (102) du second élément de blindage (100 )comprenant au moins un premier élément à patte (108) faisant saillie de chacun des bords latéraux de la partie de plaque

(102), les premiers éléments à pattes (108) engageant les bords supérieurs des parois latérales (80) du premier élément de blindage, afin de limiter le mouvement de descente du second élément (100) de blindage.

**27.** Connecteur selon la revendication 25 ou 26, dans lequel les bords latéraux du second élément de blindage (100) comprennent des seconds éléments à pattes (104) et les parois latérales (80) du premier élément de blindage (70) sont traversées par des ouvertures (86) recevant les seconds éléments à pattes (104).

**28.** Connecteur selon la revendication 25, 26 ou 27, dans lequel les premiers éléments à pattes (108) sont repliés de façon à s'étendre à proximité immédiate des parois latérales (80) du premier élément de blindage (70).

**29.** Connecteur selon la revendication 25, 26, 27 ou 28, comprenant un moyen à prise (200) qui présente une ouverture destinée à recevoir le boîtier (5) et les moyens de blindage (70, 100) depuis le côté arrière, et des moyens pour y relier le moyen de verrouillage d'un connecteur complémentaire (4, 300) pour la transmission de données, le moyen de liaison maintenant les bornes respectives du connecteur (4, 300) pour la transmission de données et le boîtier (5) dans une configuration interconnectée électriquement.

**30.** Connecteur électrique selon la revendication 29, dans lequel le moyen à prise (200) se comporte à la manière d'une interface de réseau local qui reçoit un connecteur hermaphrodite complémentaire (300) pour la transmission de données à partir de son côté avant, le connecteur (300) pour la transmission de données ayant un profil de verrouillage comprenant une barre en T (310) et une rainure en T (302), et renfermant plusieurs bornes électriques hermaphrodites comprenant des parties élastiques de contact, et le moyen à prise (200) reçoit depuis le côté arrière le boîtier (5) et les moyens de blindage (70, 100) qui peuvent être verrouillés sur le moyen à prise (200), et comprend un nombre identique de bornes, le moyen à prise (200) comportant un corps moulé d'une seule pièce comprenant des moyens de verrouillage pour le boîtier (5) et les moyens de blindage (70, 100) et une barre en T (220) venue de moulage et une rainure en T (240) pouvant être interconnectées avec la rainure en T (302) et la barre en T (310), respectivement, du connecteur (300) pour la transmission de données, le corps moulé étant profilé de façon à positionner les bornes électriques (30) du boîtier (5) dans une disposition de recouvrement et d'accouplement avec des bornes identiques dans le connecteur (300) pour la transmission de données lorsque la barre en T (220) du moyen à prise (200) est dans une configuration verrouillée avec la rainure en T (302) du connecteur (300) pour la transmission de données, et lorsque la rainure en T (240) du moyen à prise (200) est dans une configuration verrouillée avec la barre en T (310) du connecteur (300) pour la transmission de données.

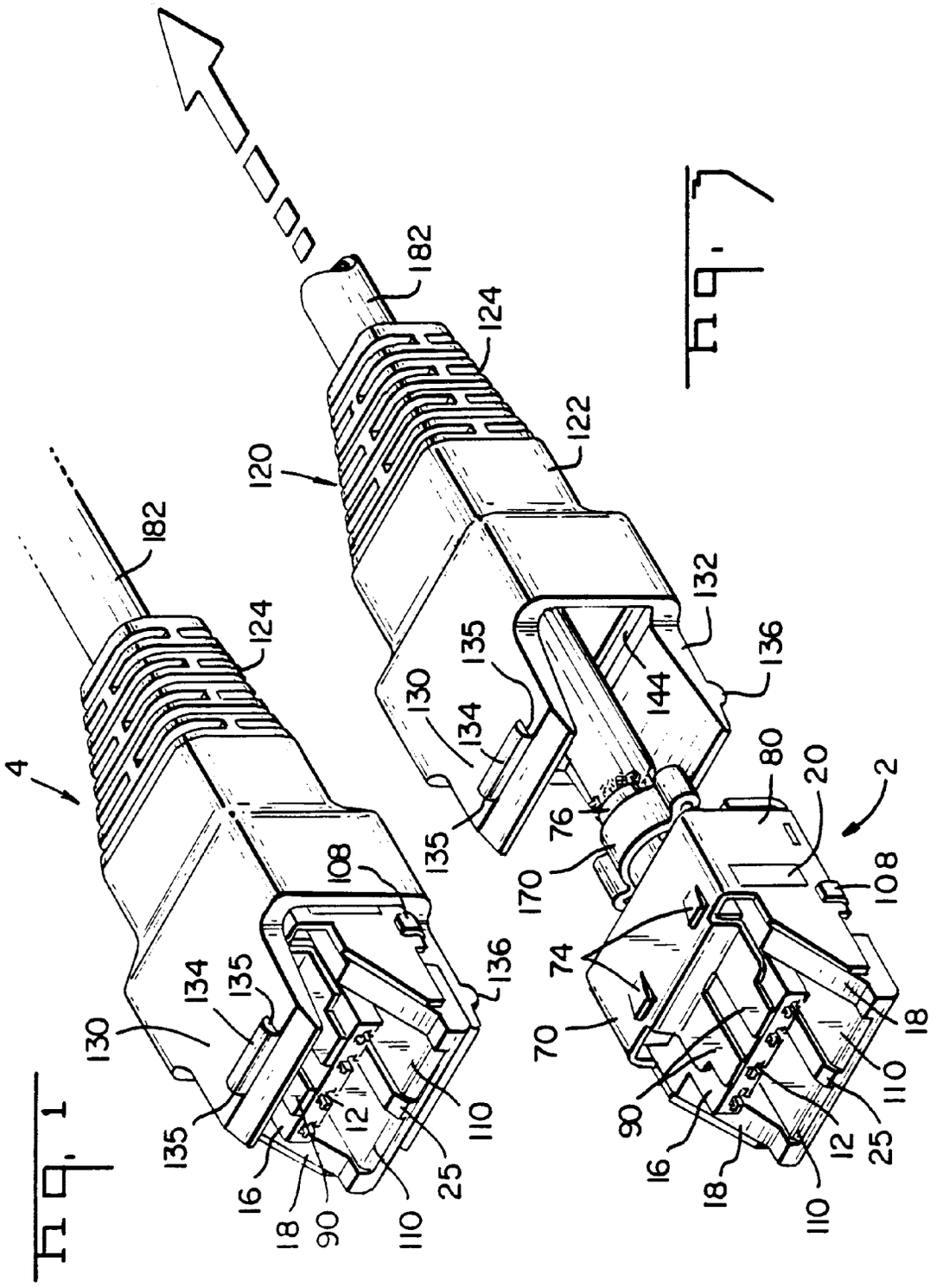
4
182
124
130
134
135
108
136
110
12
25
16
18
90
120
122
132
144
76
170
80
20
2
74
70

Fig. 1

Fig. 7

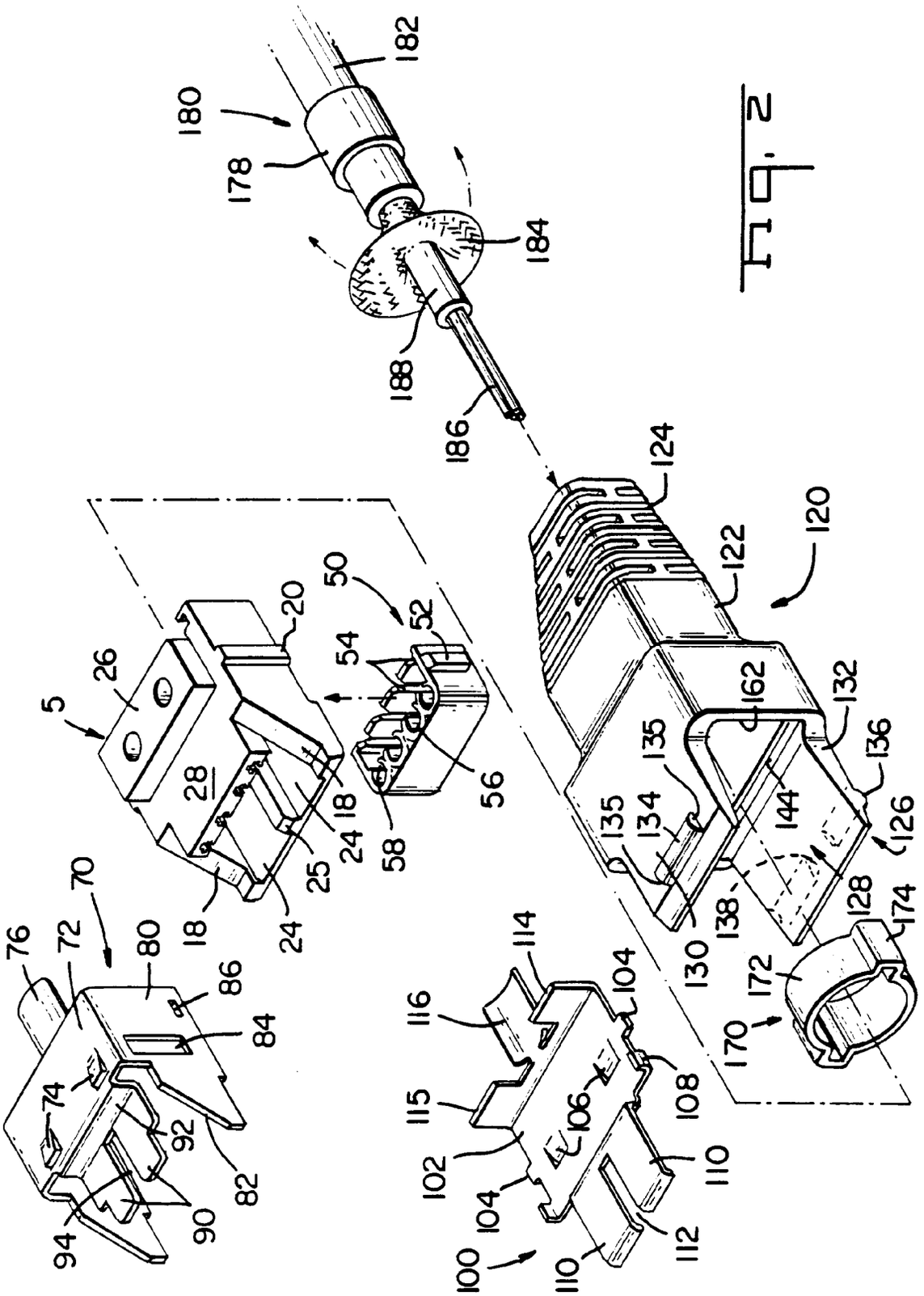
5
26
20
28
18
24
25
18
24
50
52
54
56
58
70
72
76
80
86
84
74
92
82
90
94
100
102
104
106
108
110
112
114
115
116
120
122
124
126
128
130
132
134
135
136
138
144
162
170
172
174
180
182
184
186
188
178

Fig. 2

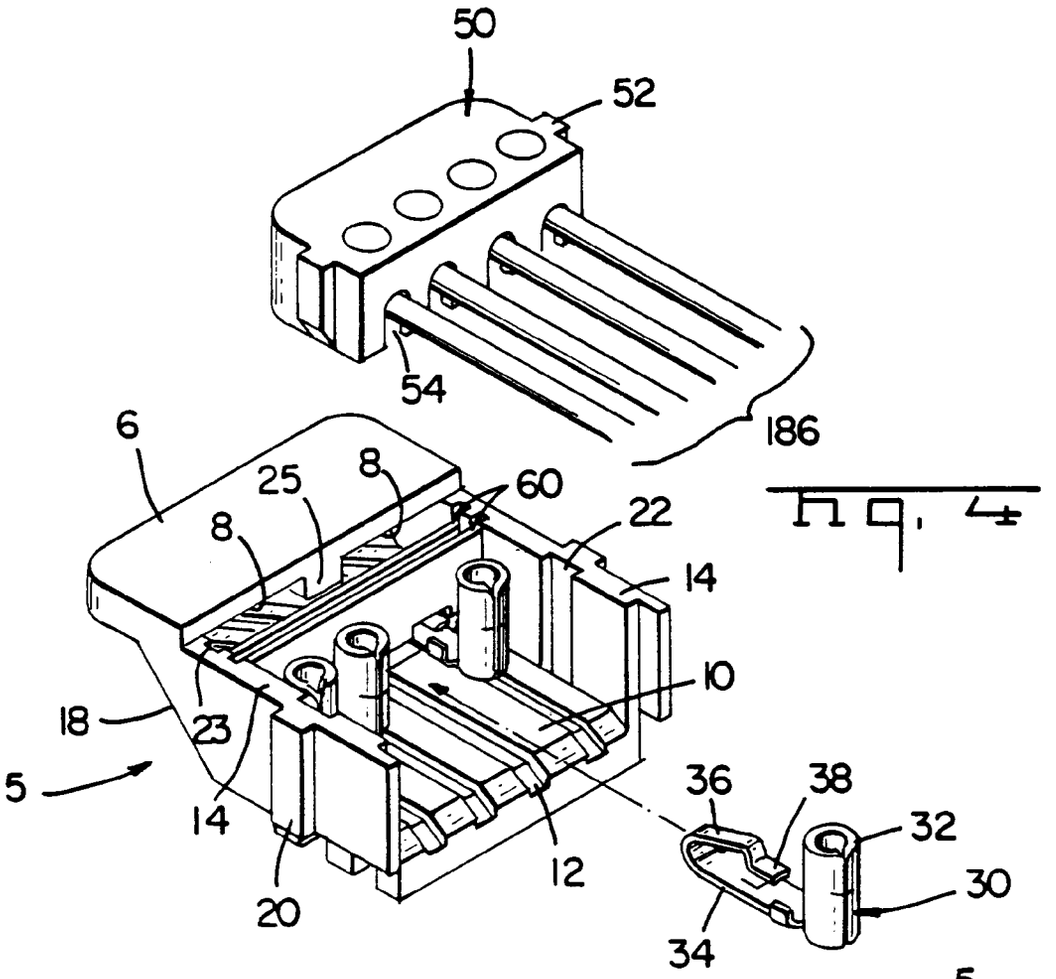
50
52
54
186
6
25
8
60
22
8
14
10
18
23
5
14
20
12
36
38
32
30
34

Fig. 4

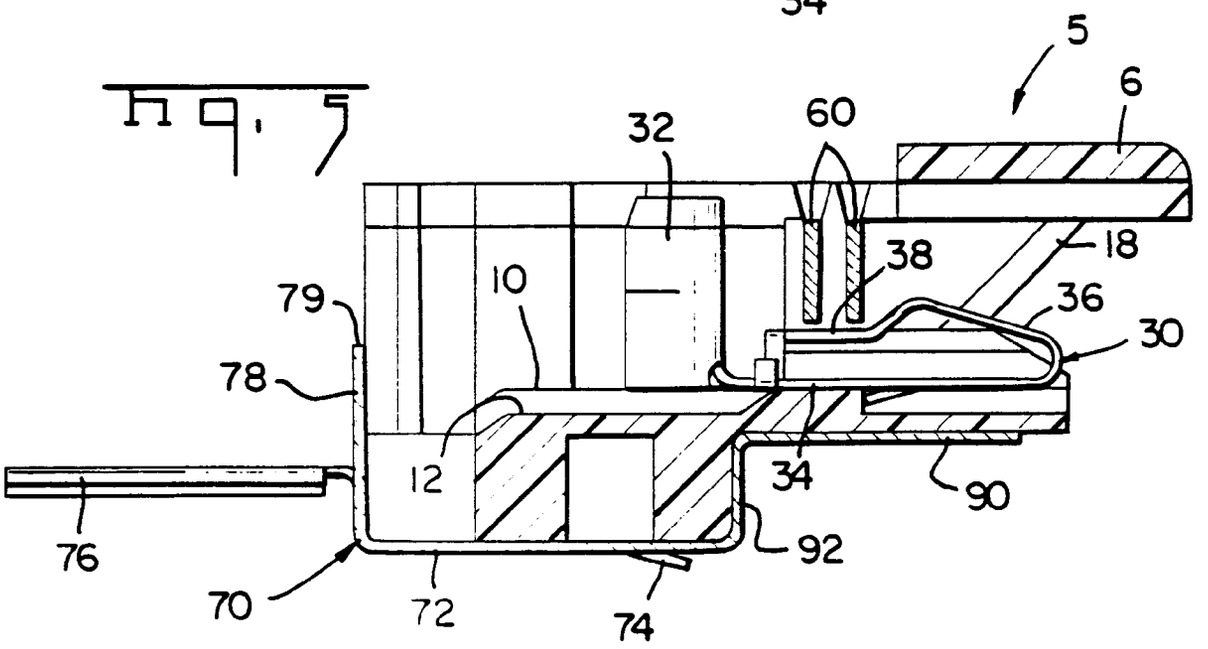
5
6
32
60
18
38
10
79
36
30
78
12
34
90
76
92
70
72
74

Fig. 5

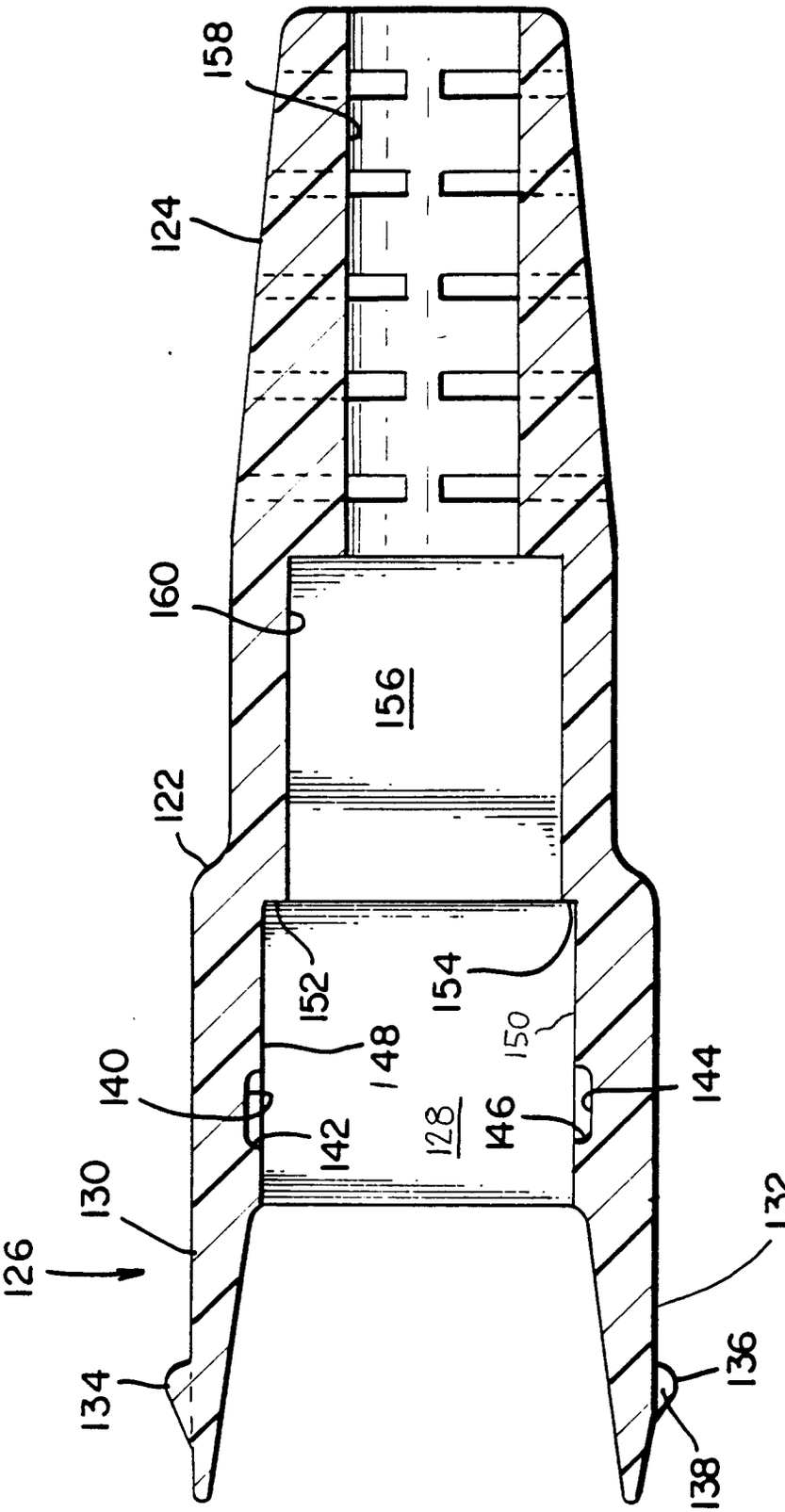
158
124
160
156
122
152
154
150
148
140
142
128
146
144
130
126
132
134
136
138

Fig. 6A

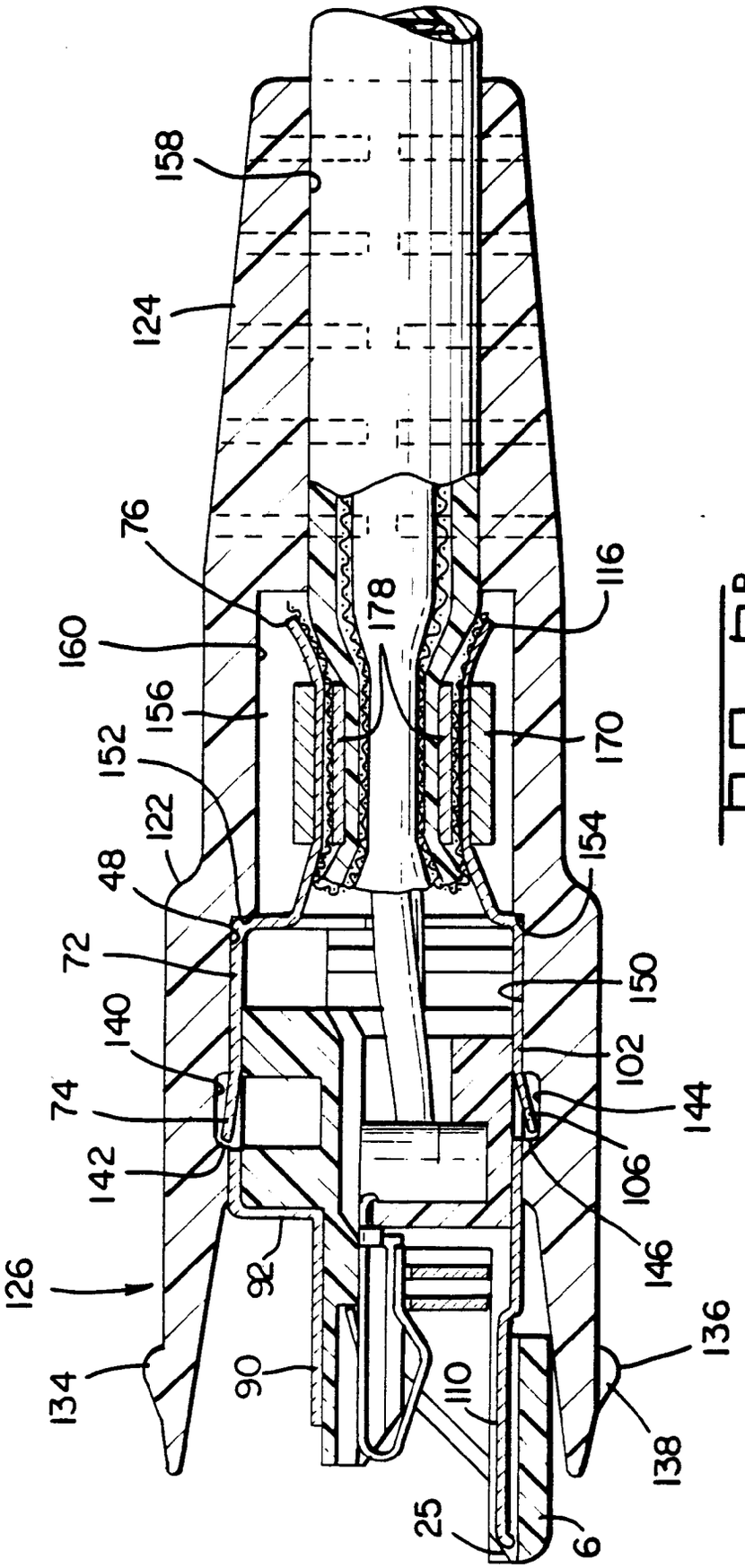
158
124
76
160
156
152
122
48
72
140
74
142
126
134
92
90
110
25
6
178
116
170
154
150
102
144
106
146
136
138

Fig. 8

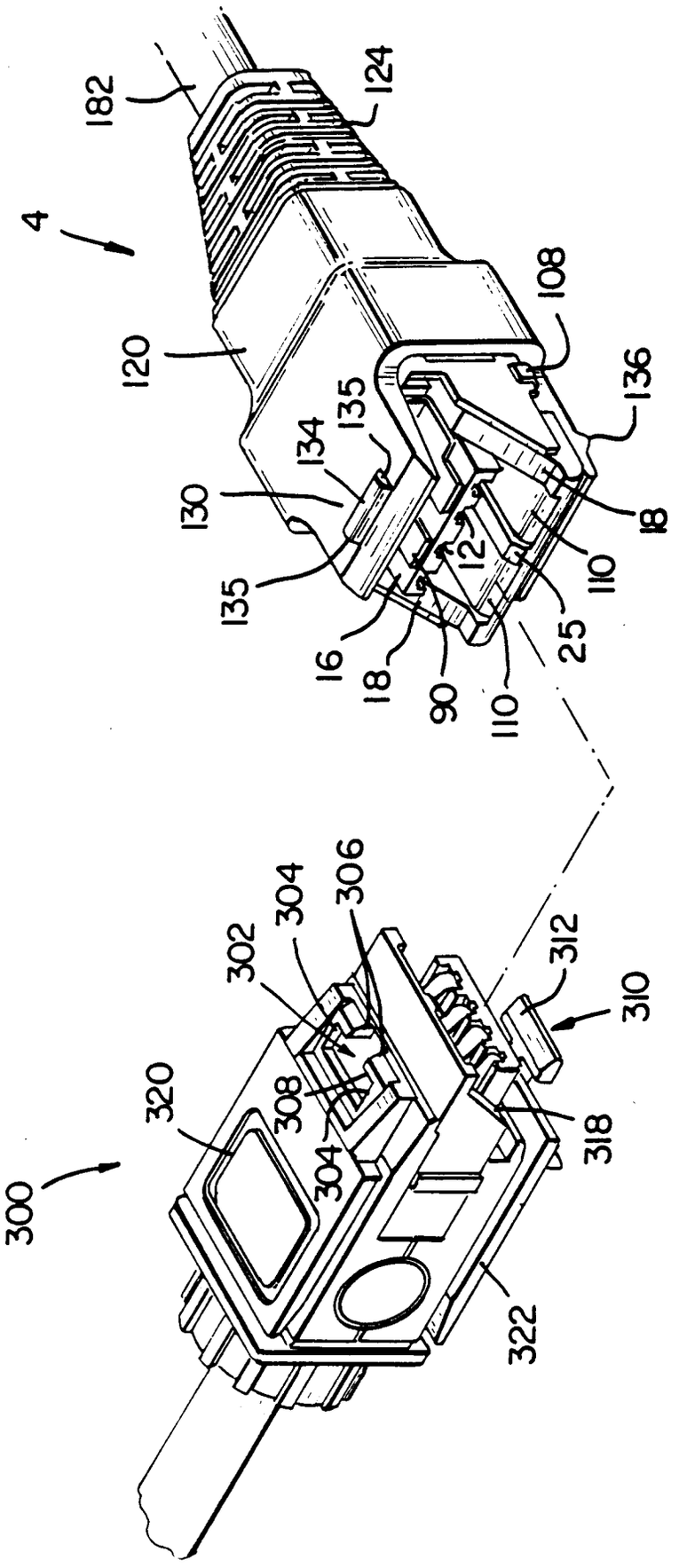
4
182
124
120
108
136
135
134
130
18
12
110
135
25
16
18
90
110
300
320
302
304
306
308
304
312
310
318
322

Fig. 7

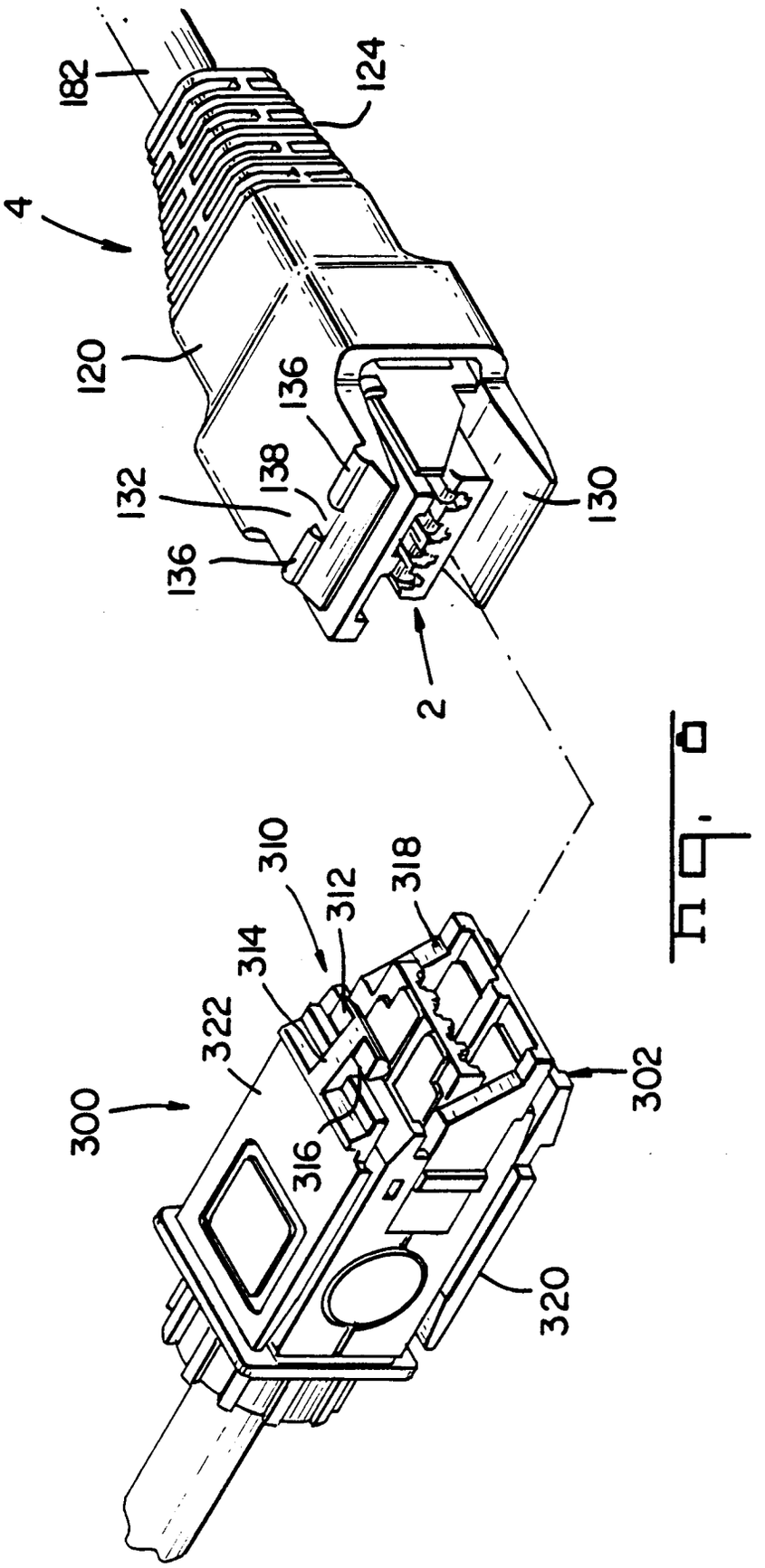
182
124
4
120
136
138
132
136
130
2
310
312
318
314
322
300
316
302
320

Fig. 6

Fig. 9

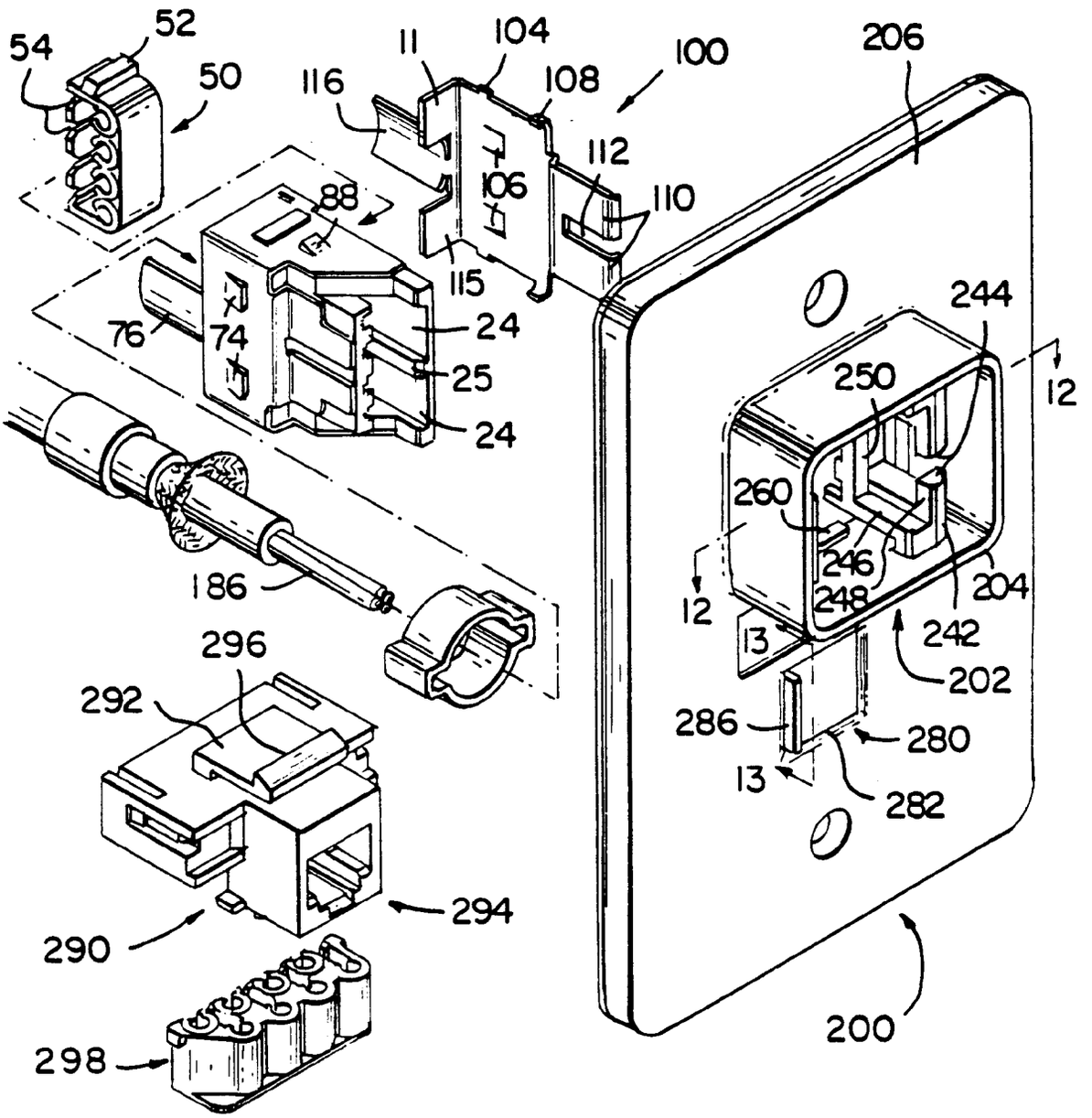
54
52
50
11
104
116
108
100
206
112
106
110
88
115
76
74
24
25
24
244
250
12
260
246
248
204
12
13
242
202
286
280
13
282
186
296
292
294
290
298
200

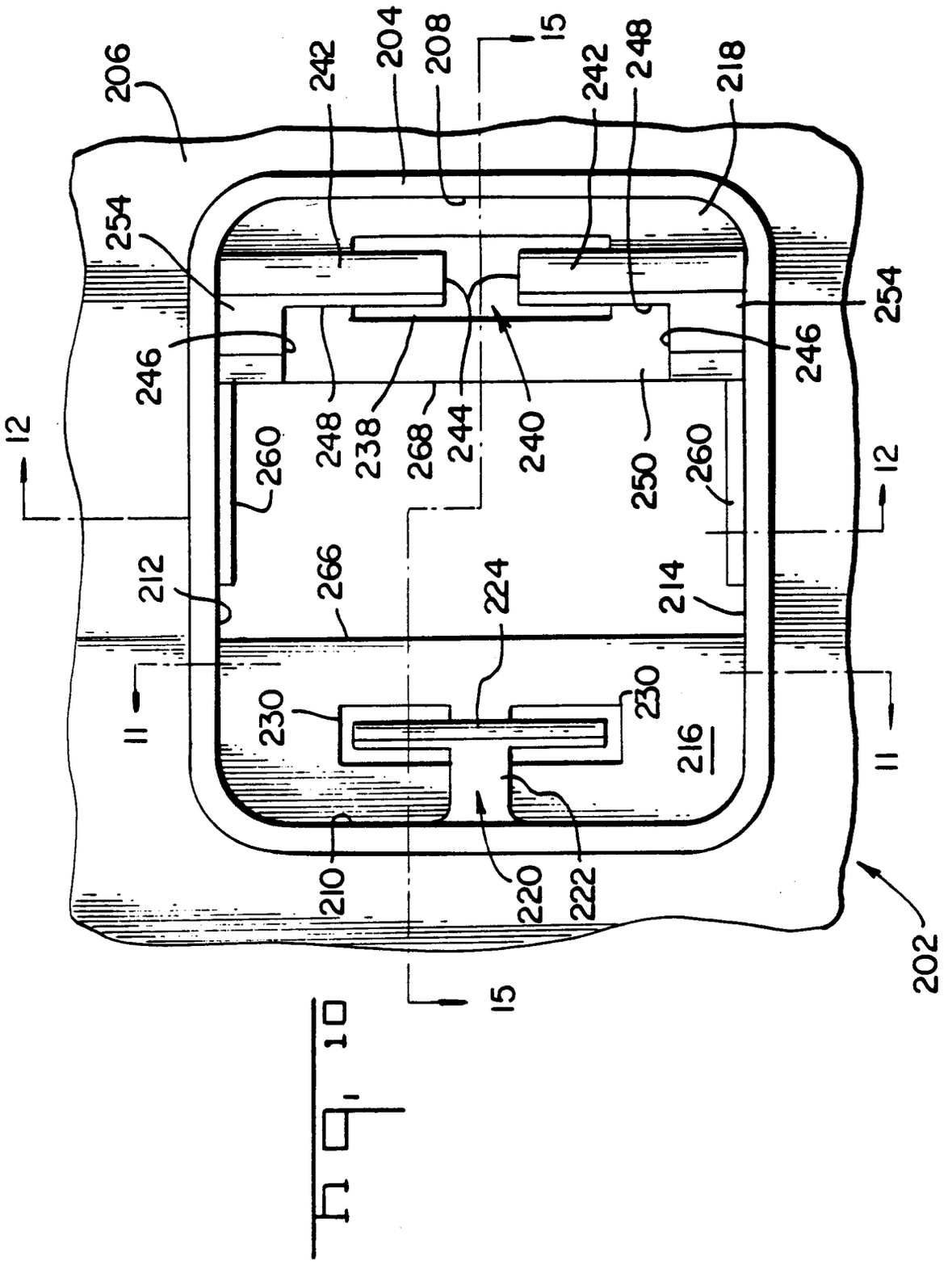
206
242
204
208
15
242
248
218
254
246
248
238
268
244
240
250
260
246
254
12
260
12
212
266
224
214
11
230
230
216
11
210
220
222
15
202

FIG. 10

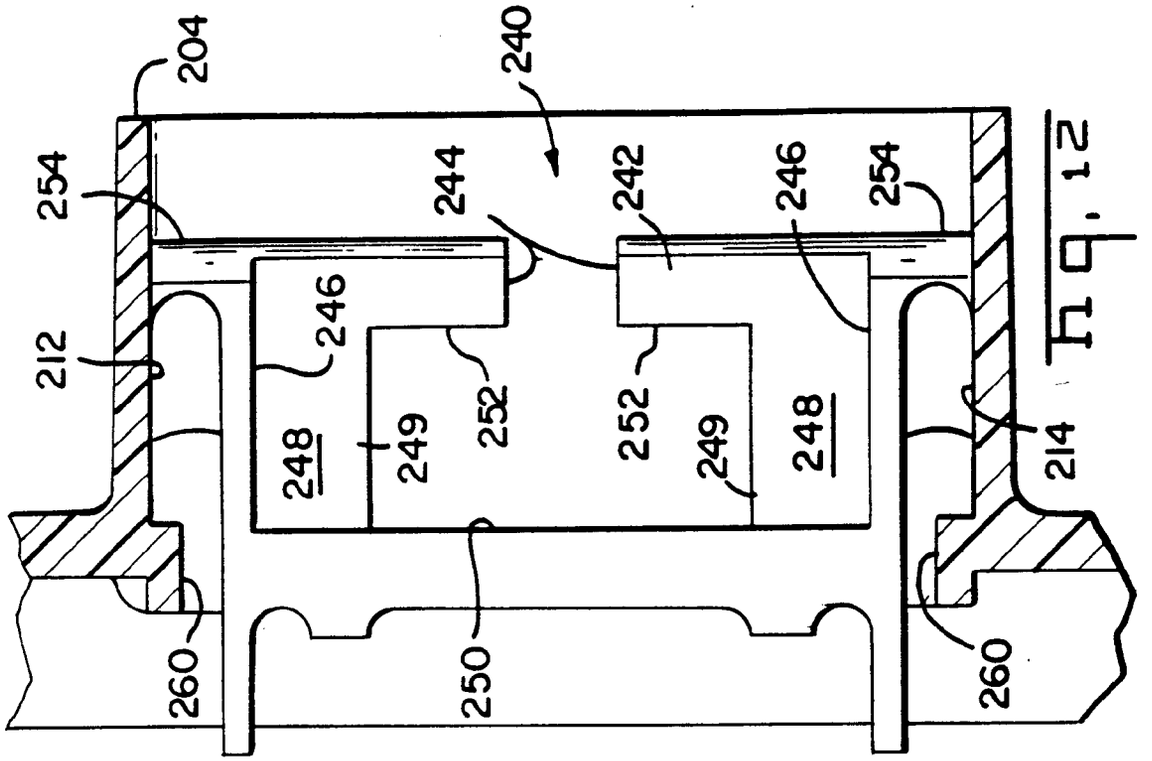
204
240
254
244
242
246
254
212
246
248
249
252
252
249
248
214
260
250
260

Fig. 12

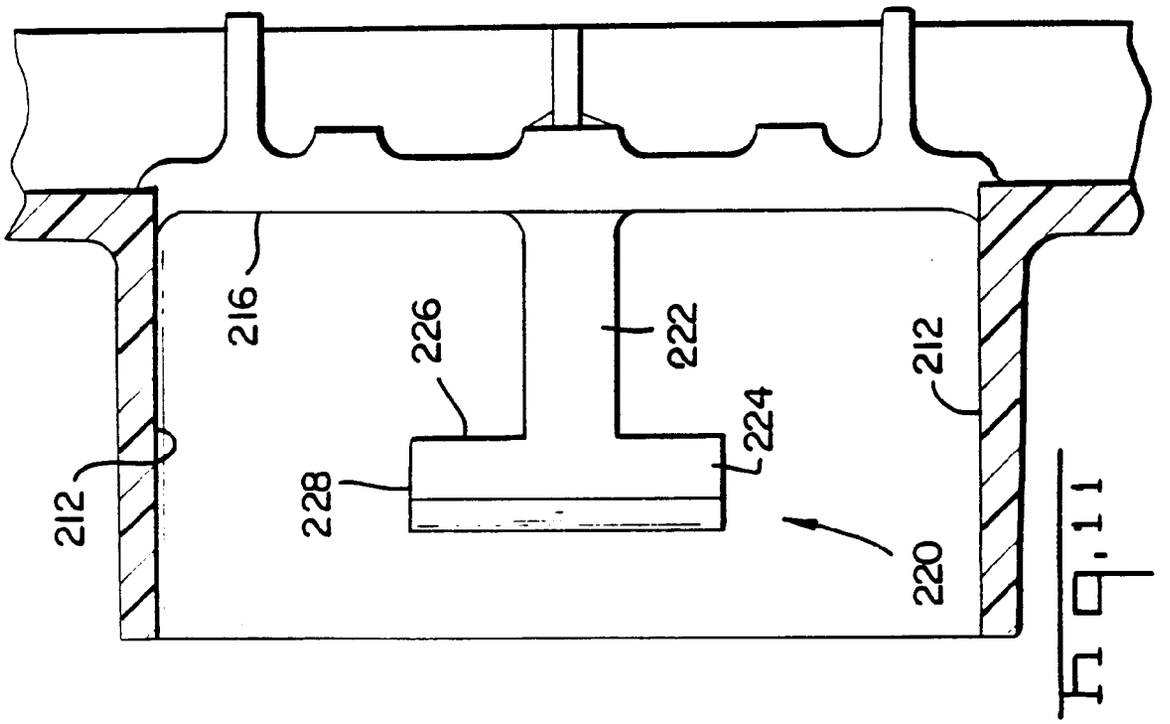
216
226
222
212
212
228
224
220

Fig. 11

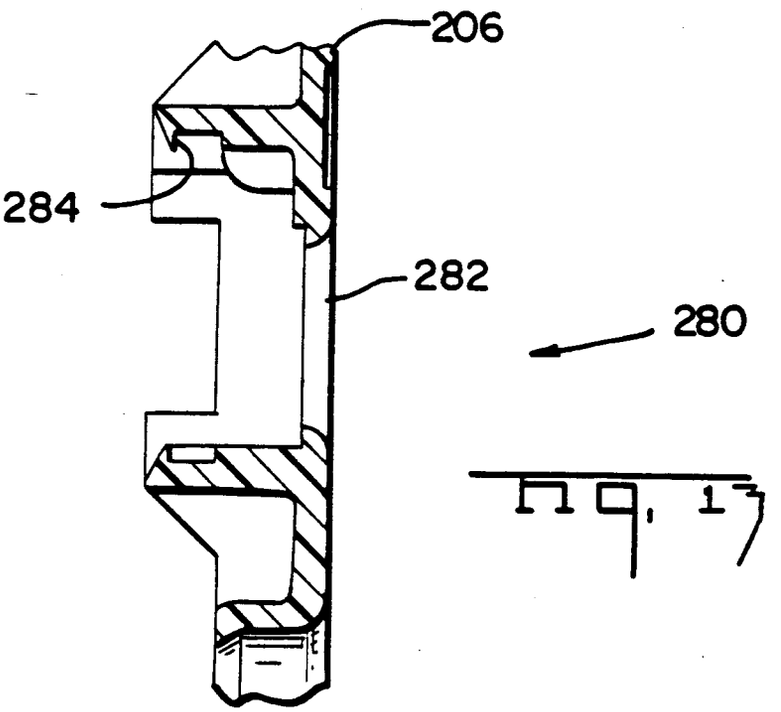


Fig. 17

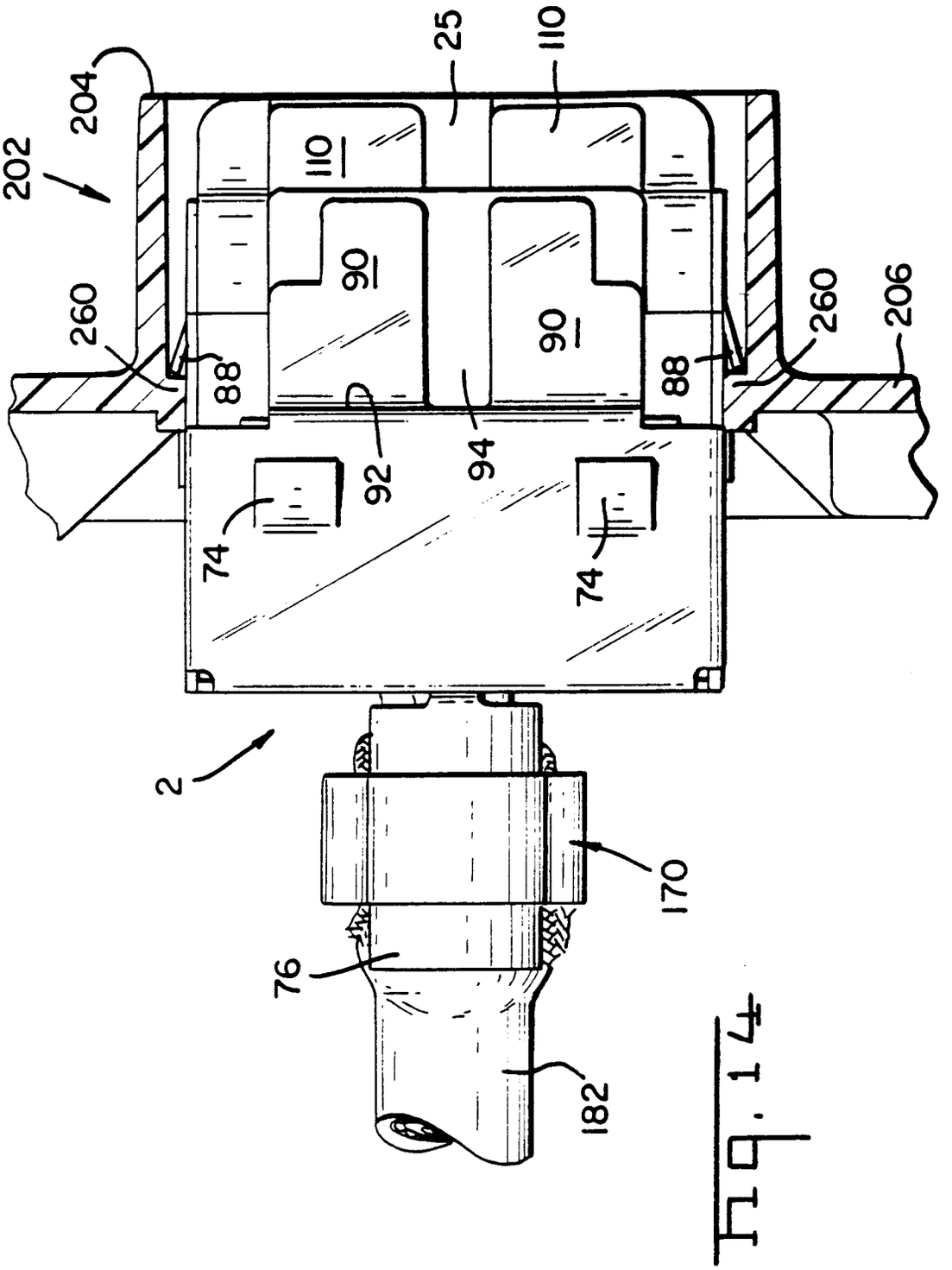


Fig. 14

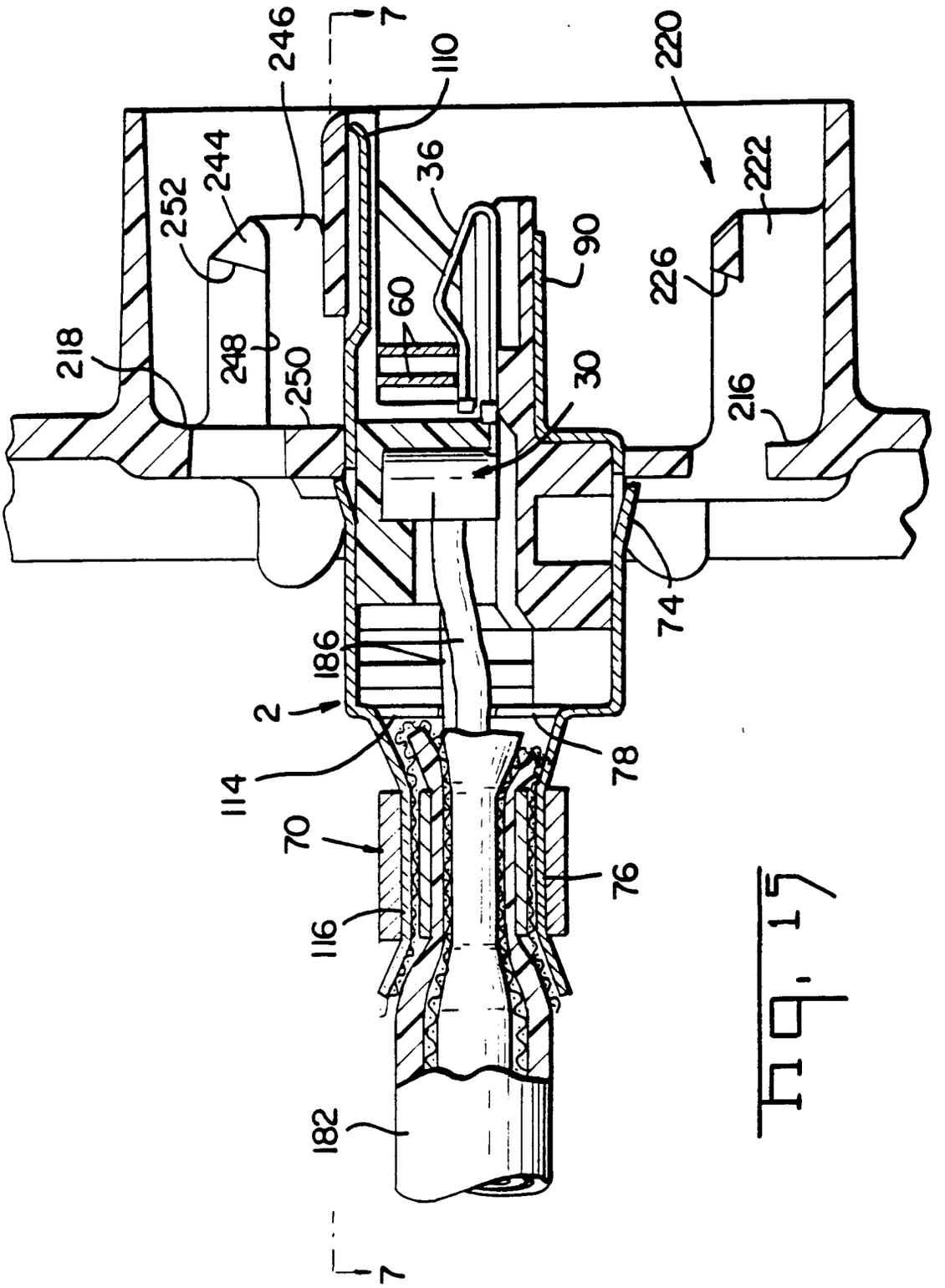
246
7
110
220
244
36
222
252
90
226
60
218
248
250
30
216
74
186
2
114
78
70
76
116
182
7

Fig. 17

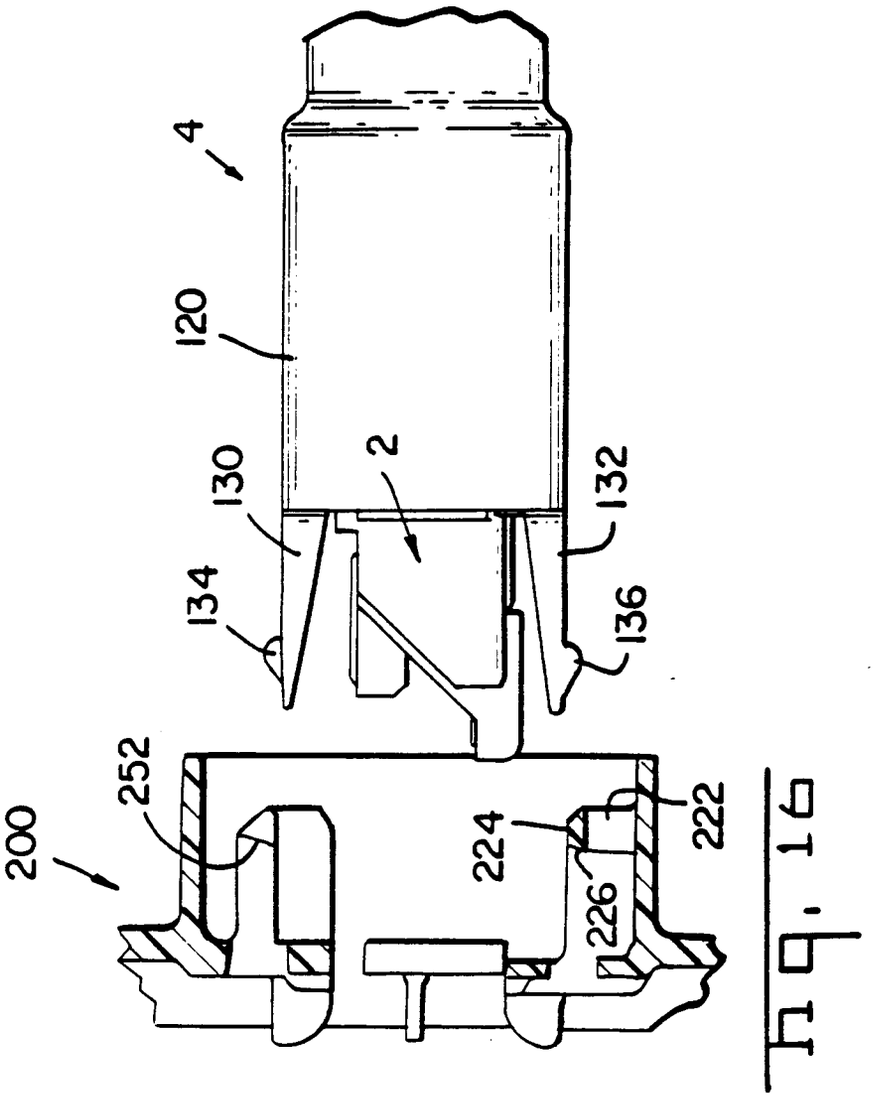


Fig. 16

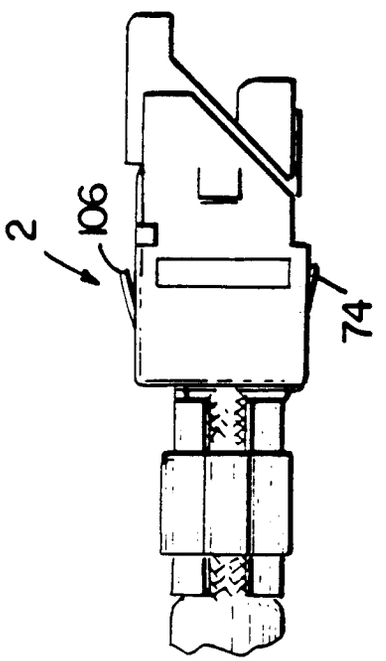

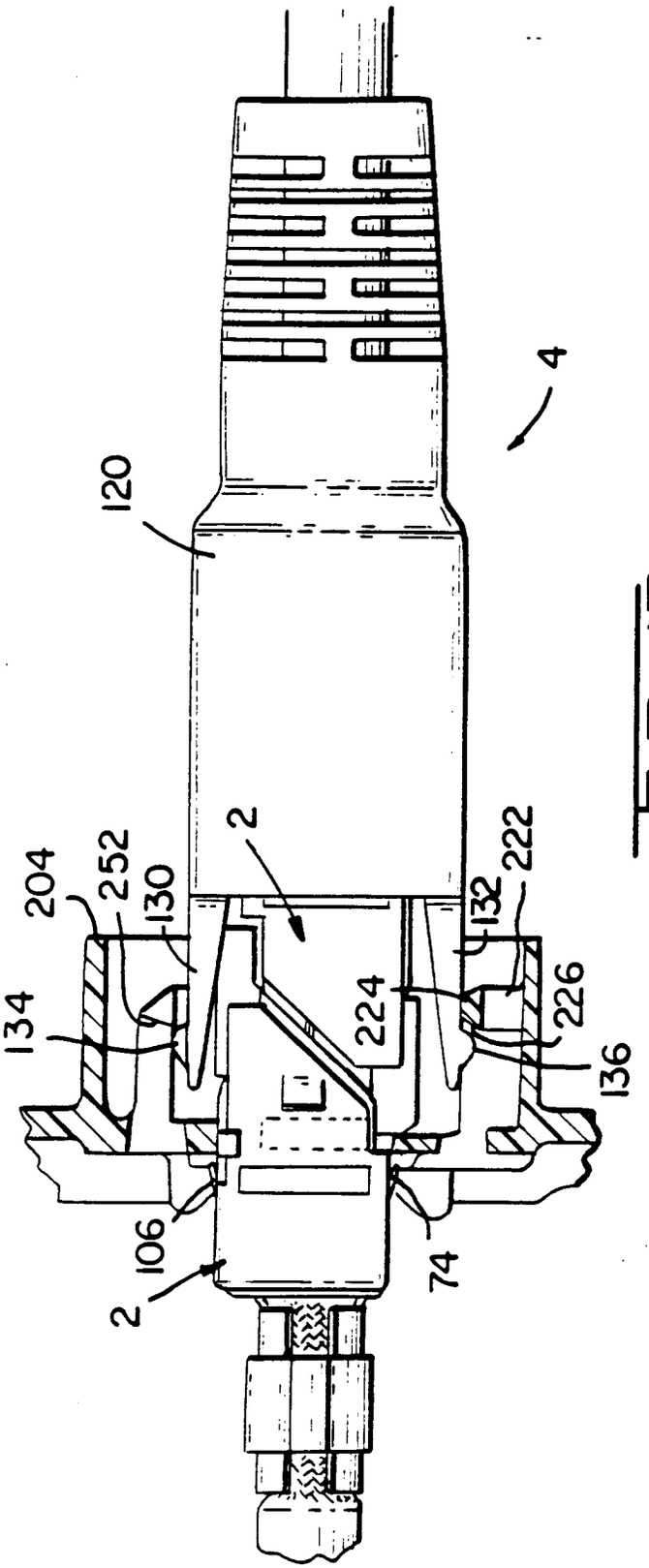


Fig. 17

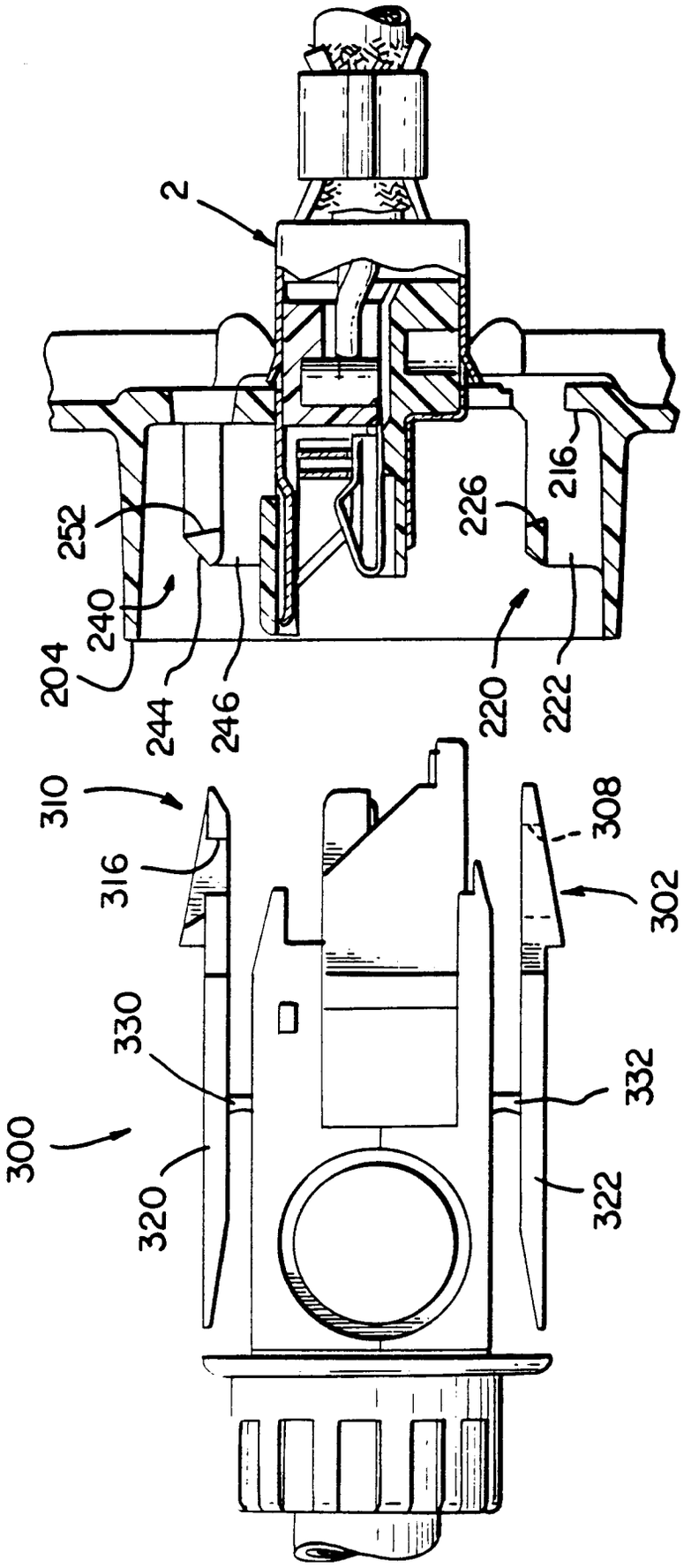
2
252
240
204
244
246
226
216
220
222
310
316
308
302
330
332
300
320
322

Fig. 10