(19) Europäisches Patentamt
European Patent Office
Office européen des brevets

(11) Publication number : **0 299 386 B1**

(12) # EUROPEAN PATENT SPECIFICATION

(45) Date of publication of patent specification : **26.10.94 Bulletin 94/43**

(51) Int. Cl.[5] : **G08G 1/09**

(21) Application number : **88110959.9**

(22) Date of filing : **08.07.88**

(54) **Prefabricated continuous road marking tape having optical and electromagnetic function.**

(30) Priority : **14.07.87 CH 2689/87**

(43) Date of publication of application : **18.01.89 Bulletin 89/03**

(45) Publication of the grant of the patent : **26.10.94 Bulletin 94/43**

(84) Designated Contracting States : **BE DE FR GB IT NL SE**

(56) References cited :
EP-A- 0 100 524
DE-A- 3 307 123
DE-A- 3 509 965
GB-A- 2 050 769

(73) Proprietor : **Eigenmann, Ludwig, Dr.**
Via Dufour 3
CH-6900 Lugano (CH)

(72) Inventor : **Eigenmann, Ludwig, Dr.**
Via Dufour 3
CH-6900 Lugano (CH)

(74) Representative : **Haibach, Tino, Dr. et al**
Patentanwälte,
Wallach, Koch, Dr. Haibach, Feldkamp,
Postfach 12 11 20
D-80035 München (DE)

EP 0 299 386 B1

Note : Within nine months from the publication of the mention of the grant of the European patent, any person may give notice to the European Patent Office of opposition to the European patent granted. Notice of opposition shall be filed in a written reasoned statement. It shall not be deemed to have been filed until the opposition fee has been paid (Art. 99(1) European patent convention).

Description

The present invention achieves a further important improvement in the field of the continuous horizontal road-marking tape technology .

Applicant, starting almost twenty years ago, has developed layered road-marking tapes, and later-on the use of electric energy and of electromagnetic energy in the technique of the road-marking has been developed.

In this last-mentioned respect applicants' UK 2 050 769 patent and corresponding patents in other countries should be mentioned.

As a matter of fact, the denomination 'Road marking tape' is today rather vague, because the information supplied by the tape includes not only information by optical radiation but also information communicated by electromagnetic radiation which has to be suitably transformed.

Horizontal road signaletics in the form of prefabricated tapes to be laid on the road surface to be marked, for the purpose of defining such markings as traffic lane separating lines, direction indicators, and even alphanumerical information (letters, numbers) all in the form of flat tape-like marking material horizontally laid on the road surface are well-known in the art. The primary marking or signalling function or effect is an opto-visual function, basically conveyed by the colour of the tape surface (normally white or yellow) which sufficiently differs from the ambient colour of the road surface (typically asphalt-grey); additionally to this base visual function by colour and ambient stray-light impinging on the tape and partially scattered towards the vehicle driver, this opto-visual effect may be enhanced by additional opto-visual means such as reflective elements provided on the tape surface which may be in the form of uniformally distributed irregular reflective substances or by individually arranged compact means in the form of retroreflective elements; these particularly provide for enhanced visibility of the road marking both under normal day-light, but particularly under conditions of reduced visibility (such as under bad weather conditions) and partticularly during night-time, the retroreflective elements directionally reflecting part of the light from the vehicles own head-lights back to the vehicle and the driver.

From applicant's own forementioned UK 2 050 769 A1 publication it is already known to utilize these opto-visual road marking tapes for providing additional information to the car driver, by including electromagnetically acting components within the tape, for cooperation with corresponding electronic components mounted on the cars which in mutual cooperation with one another will develop additional information such as to a specific condition of the road and convey such positive information to the vehicle driver. More specifically, the reference discloses the provision, beneath the road-marking tape or within a primer layer associated with the tape, of passive electromagnetic components in the form of resonant closed dipole circuits for cooperation with active electronic components in the form of secondary radars aboard the vehicles. While this known system thus combines both opto-visual features and electromagnetic features, the fact that the tape-associated components are purely passive electromagnetic components involves rather narrow limitations on the type and scope of the additional information which can be provided by the electromagnetic information channel; basically, this known system as to the electromagnetically provided information will be limited to information which can be coded geometrically by a respective geometrically coded installation of the respective passive dipoles along the marking tape.

It is therefore a main objective of the present invention to substantially enlarge the scope of the additional ancillary information that can be provided by this type of tape-like horizontal road marking systems, combining both opto-visual features and electromagnetic features, while at the same time retaining the tape as a substantially self-sufficient structure independent from external feed of electrical energy via the road surface.

To this purpose, in accordance with the present invention a continuous prefabricated multi-layer road-marking tape for installation on the road surface comprises an upper portion having protrusions including, solar cells, and light-emitting diodes (LEDs), the upper portion further comprising optically retroreflecting components, a lower portion comprising at least one layer including electromagnetic radiation reflector means, said lower portion further comprising electromagnetic interference shielding means as a protection against electromagnetic perturbations from the road bottom, said tape further comprising storage batteries, tape-based electromagnetic transmitter and antenna means of low-energy consumption, exploiting only electrical energy provided by said tape-based solar cells and storage batteries, and electrical circuitry operably connecting said solar cells, storage batteries, light-emitting diodes and transmitter and antenna means.

In accordance with the basic concept of the present invention the tape substantially is a two-part structure, with an upper portion comprising optically operative (passive and active) elements, such as retroreflective units and LEDs, and a lower portion housing (passive) electromagnetic reflector and antenna means; additionally solar cells are provided in the upper portion of the tape structure, for collecting light energy impinging on the tape and converting it to electrical energy, storage batteries are provided in the tape for storing such electrical energy and active electromagnetic transmitter means and associated antenna means are provided

in the tape, together with electrical circuitry interconnecting the LEDs, solar cells, storage batteries, transmitter units and antenna means.

By the present invention, the combined information capabilities of the horizontal road-marking tape structures are greatly enhanced while at the same time retaining the entirely self-sufficient nature of the road marking tape. As to the opto-visual information capability of the marking tape, the inclusion of active optical units such as LEDs (which can be energized from the storage batteries accumulating the electrical energy generated by the solar cells provided in the tape) potently adds to the visual information that can be provided by the tape. And the inclusion, within the tape, of active electromagnetic transmitters (and associated antenna) remarkably adds to the overall information capability of this road marking tape system, in cooperation with receiving and decoding electromagnetic apparatus aboard the vehicles, additionally to the information capability as known from the above mentioned UK 2 050 769 publication.

DE 3 509 965 A1 is concerned not with the field of road-marking but with a system of automatically switching the normal radio-receivers aboard car vehicles to the operating frequency of the respective area radio stations, as the vehicle passes from the operative area of one station to the operative area of the adjacent next station. For this purpose, the reference discloses the provision on the road of passive means such as bar codes extending across the entire road width, to be scanned by respective active sensors installed aboard the vehicles and operative to effect the required switching function (change of frequency of the radio receiver in the vehicle). As an alternative active signal emitting means may be installed along the road which when passed by by the vehicles will effect the desired switching functions via respective receiving apparatus aboard the vehicles.

Those active means would be applied at respective traffic signs on the road side, i.e. associated with vertical traffic signs alongside the road.

DE 3 307 123 A1 is concerned not with road marking but with a system for providing information to the vehicle driver as to the geographic position, by means of passive components such as bar codes, on the road surface which are being scanned by detecting devices aboard the vehicles. The bar code (translated into respective electrical signals aboard the vehicle) will translate into the respective north/south and east/west coordinates of the vehicle.

For the purposes of the description herein, when referring to horizontal road marking tapes, of course the optical road marking effect is an important function and, consequently, the tape in accordance with the present invention includes retroreflective elements, light-emitting diodes (LEDs), solar cells, storage batteries, and the tape is supposed to be in a position where it will exploit only that solar energy which is incident on the tape. On the other hand, with a view to achieve a hitherto unattainable high level of safety the tape of the present invention will be provided with the means for fully exploiting the potential contribution by the use of electromagnetic energy, as transmitted by the respective means in the lower layers of the tape.

Following are specific examples where the contribution of the electromagnetic energy is nearly vital:

1. Dangerous locations: One cannot always be aware of a dangerous location in the road which requires a reduction in vehicle speed. In such case, the warning impulse must originate from the tape, e.g. from a gigahertz reflector dipped in a layer of adhesive and positioned upon the low layers of the tape. Said warning impulse reflects the activation of a comparator placed on the vehicle and, consequently, the activation of an optical or an acoustical indicator within the vehicle.

2. Presence of ice: This hazard is very important, since the presence of ice cannot be seen. A negative temperature control (NTC) unit or device activates an EPROM (erasable program read only memory) chip and a megahertz transmitter is positioned together with its antenna upon the lower layers of the tape. A message for reduction of speed is then emitted.

3. Traffic jam: This hazard is becoming more and more frequent today, with drivers sometimes loosing their tempers. In this case, as will be explained in detail later-on, the drivers intervene as the vehicle presses an emergency micro-switch placed under the tape. As a consequence the EPROM, the megahertz transmitter and its antenna are activated, but at the same time a one-directional light emitting tape may be activated for discharging the jam.

From the above examples it would appear that both types of radiation are useful and necessary , i.e. optical and electromagnetic radiation, for communication of information.

Before specifically describing the electromagnetic radiation means, the general structure of the tape which has assured the best results will be detailed with reference to the accompanying drawing.

Description of the Drawings

Fig. 1 is an exploded fragmentary schematic view showing, in side elevation and in top plan, the several layers of a tape structure according to the present invention,

Fig. 2 is a fragmentary top plan view of a third tape layer 6 which includes various groups of equidistant metallic stripes 26 adhering to the tape, and forming a reflector aggregate 18,

Fig. 3 is a fragmentary top plan view of a tape shielding layer 10,

Fig. 4 is a schematic, showing a suggested gigahertz transmitter and receiver installed on the vehicle,

Fig. 5 is a schematic diagram of an embodiment utilizing a negative temperature control (NTC) device 46 for warning the vehicle driver as to the presence of ice on the roadway.

Fig. 6 is a fragmentary top plan view showing the employment of parallel signalling tapes 56,62 for signalling a traffic jam and activating directional signals so as to direct vehicles away from the traffic jam.

Reference is now made to fig. 1, with the understanding that not all the layers shown must necessarily be present in the tape; each layer is shown in cross-section and in corresponding plan view.

The upper layer 2 is a wear resistant film made of polyurethane resin, which has since many years achieved the best results. Upper layer 2 is pigmented in order to ensure the best visibility by day; retroreflecting components 14 are applied upon it, and at 16 there is represented one of a plurality of transparent protrusions in which there may be placed light emitting diodes (LEDs), solar cells, storage batteries and the like.

The following intermediate layer 4 consists of a non-woven fabric, strongly impregnated with a polyurethane prepolymer which provides the mechanical properties of the tape.

The third layer 6 includes antennae and reflectors 18 which are dipped in adhesive, schematically shown in fig. 1, and which will be described in detail later-on (fig. 2).

The fourth layer 8 comprises the circuits connecting the electric and the electromagnetic components, said circuits are embodied by conductive stripes (20) dipped in adhesive.

The fifth layer 10 is the EMI (electromagnetic interference) shielding layer which has the function of protecting the electromagnetic elements from disturbing interferences which might originate from the ground beneath. Layer 10 may consist of a dispersion of conductive particles, or of a metallization, schematically shown at 22 in a suitable carrier medium. Good results have been obtained by using high percentage nickel dispersions in an acrilic prepolymer, such as the nickel dispersions manufactured by the firm Metalgalvano Sozzi of Rovello Porro (Italy) or the acrilic coating 3M110 manufactured by Minnesota Mining & Manufacturing Co.

Since the manufacture and installation of the forementioned tape involves a certain cost, even if not a very high one, the possibility of recovering the tape and removing it to another locality is desirable. To this purpose, the sixth layer 12 consists of a strong extensible web, strongly impregnated by an adhesive which has a good adhesion to the road surface, but at the same time allows removal of the tape without damaging it, said layer being illustrated in plan view at 24.

Returning to the functions of the tape, gigahertz reflector 18 in layer 6, shown in Figs. 1 and 2, which reflects electromagnetic energy emitted by the vehicle, is located on the lower layers of the tape and is fundamental for monitoring and controlling the speed of the vehicle. Gigahertz reflector in layer 6 is embodied by a multiplicity of conductive stripes 26 dipped in adhesive, illustrated in Fig. 2; those stripes 26 are positioned at an angular direction - usually 15° - relative to the direction of vehicle traffic. This angular feature assures good reception of the reflected waves at the side of the tape, within a sufficiently wide lateral lane.

As shown in fig. 2, reflector 18 consists of several groups 30,28 of equidistant metallic stripes 26, adhering to the tape, for example metal foils of 1 mm width, each group being marked by a different distance between the stripes: e.g., in fig. 2 there are shown two groups, 28 and 30, wherein the metal foils or stripes are spaced apart by different distances.

Gigahertz reflector 18,26 displays a diffuse reflection behaviour in elevation, and since the position of the vehicle on the road may vary within a certain range of several meters at right angles to the direction of the traffic, the reflection maxima should be as close as possible within the reflection diagram.

Good results have been obtained by choosing, for a space of 0 to 4 meters, four groups of stripes, with a first group having an interstitial distance of 2 cm between the individual stripes, of 1,8 cm in a second group, of 1,6 cm in a third group, and of 1,4 cm in a fourth group. More than five stripes 26 have been used in every group, with the length of each stripe 26 being at least 50 cm, but usually much more.

In fig. 3 there is shown the shielding layer 10, embodied as described; the shielding area is somewhat wider than the group of the reflectors, in order to obtain the best possible shielding effect.

Fig. 4 schematically and diagrammatically shows the arrangement of the means for transmission and reception provided on the car. These operate advantageously at a frequency in the Gigahertz field, e.g. at 24 GHz.

Transmitter 32 on the vehicle comprises a frequency stable oscillator which is connected via a coupling device 34 to a horn antenna 33 which is arranged at an angle of 45° with respect to the road surface; the antenna 33 emits radiation towards a road-side reflector 18 which is only schematically shown; reflector 18 may be embodied by the metallic stripes 26 of reflector layer 6 shown in fig. 2.

Energy returning from reflector 18,26 is received by another horn antenna 35, also placed on the vehicle

and is fed to a mixer 38 from which a frequency f_D exits at the output which is the difference between the frequency emitted by antenna 33 and the one received by antenna 35. In fact, as the reflector 18,26 is swept at a certain speed, the transmission and reception frequencies will not be the same because of the Doppler effect.

The signal from mixer 38 is fed to a high-pass filter and 80 dB amplifier 40, hence to low-pass filter 42, and finally to a comparator and pulse former 44.

Two methods for activating the indicator on the vehicle could be contemplated.

The first method is based on the pulses originating from the metal stripes 26, upon sweeping of the transmitted high-frequency waves across the tape, i.e. the waves frequency, and only is related to vehicle speed. The pulses form a pulse train such that the threshold of the comparator 44 is exceeded and an indicator is activated. The second method is a safer one. Comparator 44 of fig. 4 includes a generator of a tuning note adapted to a selected speed; said generator provides pulses of a certain form and frequency. When the reflected waves and the pulses provided for a selected speed are overlapping, an indicator on the vehicle is activated. This described technology is very well known.

The control of vehicle speed in dangerous locations is very important, and one can provide a kind of a 'black box' for these dangerous locations in order to compel the vehicle drivers to reduce speed.

As mentioned, the composite road marking tape which is the object of the present invention also includes a small radio-transmitter 52 (fig. 5) which transmits messages recorded in EPROM. Said transmitter 52 which has a very low consumption of energy, for example 8 mW, is fed by small storage batteries which in turn are fed by solar cells placed on the tape, as it was specified in connection with the transparent protrusions 16 of fig. 1.

The messages recorded in EPROM and transmitted under the action of suitable controls may be of different kinds, and two of them, of particular importance, are hereinafter described as examples.

Fig. 5 shows an embodiment of warning the vehicle driver as to the presence of ice. In this embodiment a Negative Temperature Control - NTC device 46 is used consisting of a sensor 48 and of a calibration device 50; the EPROM 51 comprises an integrator 47, a memory 49, and an amplifier 53; the transmitter 52 has a dipole-antenna 54.

When the temperature falls below a pre-set limit, these devices transmit a recorded message.

Another very important hazard is traffic jam. In fig. 6 there is shown how a traffic jam may be signaled, utilizing the capabilities of road marking tapes of the present invention, and how indicators may be activated in order to discharge the traffic jam.

There are illustrated two signaling tapes 56,62, placed in parallel, and connected by means of an electric cable (not illustrated).

Tape 56 is a conventional marking tape, and tape 62 is an emergency tape. On tape 56 there are shown transparent protrusions 60, in which LEDs, solar cells, storage batteries are housed similarly as within those transparent protrusions 16 of fig. 1. There are also provided, at predetermined locations, compressible portions 61 in which a microswitch is placed. As regards such compressible tape see applicant's European Patent No. 0 100 524 and US Patent No. 4 685 824.

In case of a traffic jam, a vehicle driver who takes the initiative, or a traffic policeman, activates the microswitch by placing his car on the compressible portion 61. This activates an alarm system like the one which has been aforedescribed for signalling the presence of ice. On the one hand, a message 'traffic jam' is transmitted, on the other hand the emergency tape 62 is activated; on said emergency tape 62 there are provided transversal pulsing lights 66 of red colour, and longitudinally aligned pulsing lights 64 of green colour. Lights 64 guide the traffic towards a direction which may be opposite to the normal direction, e.g. towards an exit. The pulsing of the lights 64 may be very rapid.

The traffic in the opposite direction may take place on an overtaking lane or on an emergency lane, as possible in the particular situation.

At the same time, a further entry of vehicles in the respective jam portion of the highway must be prevented, and to this purpose at the beginning of said traffic jam portion a red light (not illustrated) will be lighted. Furthermore, a couple or plurality of couples of sensors are placed at the beginning of the respective traffic jam portion, so that if a car enters in the forbidden direction, notwithstanding the red traffic light, its plate will be identified by a camera.

The circuits which are required in order to realize the functions described above pertain to a known technique.

Many other hazards may be taken into consideration, for which analogous information systems may be employed, for example, the hazard of fog.

The traffic jam road-marking tape can also be useful for guiding traffic in the direction of the city center, or in other directions.

Claims

1. A continuous prefabricated multi-layer road-marking tape for installation on the road surface, comprising
   - an upper portion (2,4, fig. 1) having protrusions (16) including solar cells, and light-emitting diodes (LEDs), the upper portion further comprising optically retroreflecting components (14),
   - a lower portion (6,8,10,12) comprising at least one layer (6) including electromagnetic radiation reflector means (18, figg. 1 and 4, 26, fig. 2), said lower portion further comprising electromagnetic interference shielding means (10,22) as a protection against electromagnetic perturbations from the road bottom,
   - said tape further comprising
     -- storage batteries
     -- tape-based electromagnetic transmitter and antenna means (52,54, fig. 5-) of low-energy consumption, exploiting only electrical energy provided by said tape-based solar cells and storage batteries,
     -- electrical circuitry (8,20) operably connecting said solar cells, storage batteries, light-emitting diodes and transmitter and antenna means.

2. The continuous prefabricated multi-layer road-marking tape of claim 1, wherein said reflector means (18) comprise conductive stripes (26, fig. 2) adhered to a lower layer (6) of the tape, said stripes (26) forming a gigahertz reflector and acting as a secondary source of electromagnetic waves.

3. The continuous prefabricated multi-layer road-marking tape of claim 2, wherein said gigahertz reflector (18) comprises a plurality of conductive stripes (26, fig. 2) dipped within an adhesive adhering to said lower layer (6), said stripes (26) being positioned at an angular direction (α, fig. 2) with respect to the traffic direction, thereby enabling effective reception of electromagnetic reflective waves from broadside of the tape.

4. The continuous prefabricated multi-layer road-marking tape as claimed in any of the preceding claims, wherein said antenna means comprise conductive stripes adhered to a lower layer of the tape said stripes together with said transmitter means (52) acting as a primary source of electromagnetic waves, and forming a megahertz antenna (54, fig. 5) for transmitting information from said tape to vehicles passing by.

5. The continuous prefabricated multi-layer road-marking tape of claim 4, wherein said megahertz antenna (54, fig. 5) is adhered by adhesive to said lower layer of the tape, said tape further including an emitting transmitter (52, fig. 5) positioned on the tape for transmitting messages registered in EPROM (51) via said antenna (54).

6. The continuous prefabricated multi-layer road-marking tape of claim 5, wherein the message registered in EPROM is related to the presence of ice on the road and is transmitted on the basis of signals generated by negative temperature control (NTC) means (46, fig. 5).

7. The continuous prefabricated multi-layer road-marking tape as claimed in any of the preceding claims, said tape further including:
   - a microswitch placed within a compressible portion (61, fig. 6) of said tape (56), said microswitch being activated upon compression by a vehicle positioned on said compressible portion;
   - an EPROM connected to said microswitch so as to transmit a message concerning a traffic jam; and
   - a series of directional lights (64,66, fig. 6) activated by said microswitch, so as to divert vehicular traffic during a traffic jam.

8. The continuous prefabricated multi-layer road-marking tape as claimed in any of the preceding claims, wherein said upper portion includes:
   - a wear resistant upper face layer (2) comprising said protrusions (16) and
   - an impregnated non-woven intermediate layer (4),

   and said lower portion includes
   - a gigahertz reflector (18) supported at a distance from a megahertz antenna (54) activated by a megahertz transmitter (52) positioned on the tape;
   - a circuit layer (8) with conductive net stripes (20) dipped in adhesive;
   - an EMI shielding layer (10) and an extensible textile web layer (12,24), so as to allow removal of said tape from the road surface.

Patentansprüche

1. Kontinuierliches vorgefertigtes Mehrschichten-Straßenmarkierungsband zur Anbringung auf der Straßenoberfläche, umfassend
   - einen Vorsprünge (16) aufweisenden oberen Teil (2,4, Fig. 1) mit Solarzellen und licht-emittierenden Dioden (LEDs), wobei der obere Teil des weiteren optische Rückstrahlkomponenten (14) umfaßt,
   - einen wenigstens eine Schicht (6) umfassenden unteren Teil (6,8,10,12) mit elektromagnetischen Strahlungsreflektormitteln (18, Fig. 1 und 4, 26, Fig. 2), wobei der genannte untere Teil des weiteren elektromagnetische Störungs-Abschirmmittel (10,22) als Schutz gegen elektromagnetische Störungen aus der Straßensohle umfaßt,
   - wobei das genannte Band des weiteren umfaßt
     -- Akkumulatoren
     -- bandseitige elektromagnetische Sender- und Antennenmittel (52,54, Fig. 5) mit niedrigem Energieverbrauch, die nur von den genannten bandseitigen Solarzellen und Akkumulatoren gelieferte elektrische Energie verbrauchen,
     -- elektrische Schaltungen (8,20) zur funktionellen Verbindung der genannten Solarzellen, Akkumulatoren, licht-emittierenden Dioden und Sender- und Antennenmitteln.

2. Kontinuierliches vorgefertigtes Mehrschichten-Straßenmarkierungsband nach Anspruch 1, bei welchem die genannten Reflektormittel (18) an einer unteren Schicht (6) des Bandes angebrachte Leiterstreifen (26, Fig. 2) umfassen, wobei die genannten Streifen (26) einen Gigahertz-Reflektor bilden und als eine sekundäre Quelle elektromagnetischer Wellen wirken.

3. Kontinuierliches vorgefertigtes Mehrschichten-Straßenmarkierungsband nach Anspruch 2, bei welchem der genannte Gigahertz-Reflektor (18) eine Mehrzahl von in einen an der genannten unteren Schicht (6) haftenden Kleber eingebetteten Leiterstreifen (26, Fig. 2) aufweist, wobei die genannten Streifen (26) unter einer Winkelrichtung (α , Fig. 2) bezüglich der Verkehrsrichtung angeordnet sind, derart daß ein wirksamer Empfang von elektromagnetischen Reflektionswellen in Querrichtung des Bandes ermöglicht wird.

4. Kontinuierliches vorgefertigtes Mehrschichten-Straßenmarkierungsband nach einem der vorhergehenden Ansprüche, bei welchem die genannten Antennenmittel an einer unteren Schicht des Bandes angeordnete Leiterstreifen umfassen, wobei diese Streifen zusammen mit den genannten Sendermitteln (52) als eine primäre Quelle elektromagnetischer Wellen wirken und eine Megahertz-Antenne (54, Fig. 5) zur Informationsübertragung von dem genannten Band zu vorüberfahrenden Fahrzeugen bilden.

5. Kontinuierliches vorgefertigtes Mehrschichten-Straßenmarkierungsband nach Anspruch 4, bei welchem die genannte Megahertz-Antenne (54, Fig. 5) mittels Kleber an der genannten unteren Schicht des Bandes haftet, wobei das Band des weiteren einen auf dem Band angeordneten Senderübertrager (52, Fig. 5) zur Übertragung von in EPROM (51) gespeicherten Mitteilungen über die genannte Antenne (54) aufweist.

6. Kontinuierliches vorgefertigtes Mehrschichten-Straßenmarkierungsband nach Anspruch 5, bei welchem die in EPROM gespeicherte Mitteilung in Bezug zur Gegenwart von Eis auf der Straße steht und auf der Grundlage von durch Negativ-Temperatur-Steuermitteln (NTC) (46, Fig. 5) erzeugten Signalen übertragen wird.

7. Kontinuierliches vorgefertigtes Mehrschichten-Straßenmarkierungsband nach einem der vorhergehenden Ansprüche, wobei das genannte Band des weiteren umfaßt:
   - einen in einem zusammendrückbaren Teil (61, Fig. 6) des genannten Bandes (56) angeordneten Mikroschalter, wobei der genannte Mikroschalter beim Zusammendrücken durch ein auf dem genannten zusammendrückbaren Teil befindliches Fahrzeug betätigt wird;
   - ein mit dem genannten Mikroschalter verbundenes EPROM zur Übertragung einer einen Verkehrsstau betreffenden Mitteilung; und
   - eine Reihe von durch den genannten Mikroschalter betätigten Richtungsleuchten (64,66, Fig. 6) zur Umlenkung des Fahrzeugverkehrs während eines Verkehrsstaus.

8. Kontinuierliches vorgefertigtes Mehrschichten-Straßenmarkierungsband nach einem der vorhergehenden Ansprüche, bei welchem der genannte obere Teil umfaßt:

- eine verschleißbeständige obere Oberflächenschicht (2), welche die genannten Vorsprünge (16) aufweist, und
- eine imprägnierte Nicht-Gewebe-Zwischenschicht (4),

und wobei der genannte untere Teil umfaßt

- einen Gigahertz-Reflektor (18), der in einem Abstand von einer durch einen auf dem Band angeordneten Megahertz-Sender (52) betätigten Megahertz-Antenne (54) angeordnet ist;
- eine Schaltungs-Schicht (8) mit in einen Kleber eingetauchten bzw. eingebetteten leitenden Netzstreifen (20);
- eine EMI-Abschirmschicht (10) und eine dehnbare Textilgewebeschicht (12,24), um die Entfernung des genannten Bandes von der Straßenoberfläche zu ermöglichen.

Revendications

1. Bande de marquage de route multicouche préfabriquée continue pour installation sur une surface de route, comprenant :
   - une partie supérieure (2, 4, figure 1) comportant des saillies (16) dans laquelle sont incluses des cellules solaires et des diodes électroluminescentes (LED), la partie supérieure comprenant en outre des composants optiquement rétro-réfléchissants (14),
   - une partie inférieure (6, 8, 10, 12) comprenant une couche (6) au moins comprenant des moyens de réflecteur de rayonnement électromagnétique (18, figures 1 et 4, 26, figure 2), ladite partie inférieure comprenant en outre des moyens de blindage contre les interférences électromagnétiques (10, 22) sous la forme d'une protection contre les perturbations électromagnétiques provenant de la couche de fond de la route,
   - ladite bande comprenant en outre :
     -- des accumulateurs,
     -- des moyens d'émetteur et d'antenne électromagnétiques situés dans la bande (52, 54, figure 5) de faible consommation d'énergie, exploitant seulement l'énergie électrique délivrée par lesdites cellules solaires et accumulateurs situés dans la bande,
     -- un ensemble de circuits électriques (8, 20) reliant lesdites cellules solaires, accumulateurs, diodes électroluminescentes et moyens d'émetteur et d'antenne d'une manière fonctionnelle.

2. Bande de marquage de route multicouche préfabriquée continue selon la revendication 1, dans laquelle lesdits moyens de réflecteur (18) comprennent des rubans conducteurs (26, figure 2) appliqués par adhérence sur une couche inférieure (6) de la bande, lesdits rubans (26) formant un réflecteur dans la bande des gigahertz et agissant comme source secondaire d'ondes électromagnétiques.

3. Bande de marquage de route multicouche préfabriquée continue selon la revendication 2, dans laquelle ledit réflecteur dans la bande des gigahertz (18) comprend une pluralité de rubans conducteurs (26, figure 2) immergés dans un adhésif adhérant à ladite couche inférieure (6), lesdits rubans (26) étant positionnés suivant une direction angulaire (α, figure 2) rapportée à la direction de la circulation, d'où il résulte qu'est permise une réception efficace d'ondes électromagnétiques réfléchies en provenance du côté large de la bande.

4. Bande de marquage de route multicouche préfabriquée continue selon l'une quelconque des revendications précédentes, dans laquelle ledit moyen d'antenne comprend des rubans conducteurs appliqués par adhérence sur une couche inférieure de la bande, lesdits rubans agissant, d'une manière concourante avec ledit moyen d'émetteur (52), comme source primaire d'ondes électromagnétiques et formant une antenne dans la bande des mégahertz (54, figure 5) pour transmettre des informations provenant de ladite bande aux véhicules qui les dépassent.

5. Bande de marquage de route multicouche préfabriquée continue selon la revendication 4, dans laquelle ladite antenne dans la bande des mégahertz (54, figure 5) est appliquée par adhérence au moyen d'un adhésif sur ladite couche inférieure de la bande, ladite bande comprenant en outre un émetteur actif (52, figure 5) positionné sur la bande pour transmettre des messages enregistrés dans l'EPROM (51) à travers ladite antenne (54).

6. Bande de marquage de route multicouche préfabriquée continue selon la revendication 5, dans laquelle

le message enregistré dans l'EPROM se rapporte à la présence de glace sur la route et est transmis sur la base de signaux générés par un moyen de contrôle de température négative (NTC) (46, figure 5).

7. Bande de marquage de route multicouche préfabriquée continue selon l'une quelconque des revendications précédentes, ladite bande comprenant en outre :
   - un microrupteur placé à l'intérieur d'une partie compressible (61, figure 6) de ladite bande (56), ledit microrupteur étant activé par la compression qu'opère un véhicule positionné sur ladite partie compressible,
   - une EPROM reliée audit microrupteur de manière à transmettre un message concernant un embouteillage, et
   - une suite de lumières directionnelles (64, 66, figure 6) activées par ledit microrupteur de manière à dévier la circulation automobile pendant un embouteillage.

8. Bande de marquage de route multicouche préfabriquée continue selon l'une quelconque des revendications précédentes, dans laquelle ladite partie supérieure comprend :
   - une couche de surface supérieure anti-usure (2) comprenant lesdites saillies (16), et
   - une couche intermédiaire non tissée imprégnée (4), ladite partie inférieure comprenant :
   - un réflecteur dans la bande des gigahertz (18) supporté à une distance définie d'une antenne dans la bande des mégahertz (54) activée par un émetteur dans la bande des mégahertz (52) positionné sur la bande,
   - une couche de circuit (8) comportant des rubans conducteurs d'un tissu en filet (20) immergés dans un adhésif,
   - une couche de blindage EMI (10) et une couche en matière textile extensible (12, 24) destinée à permettre l'enlèvement de ladite bande de la surface de la route.

Fig.1

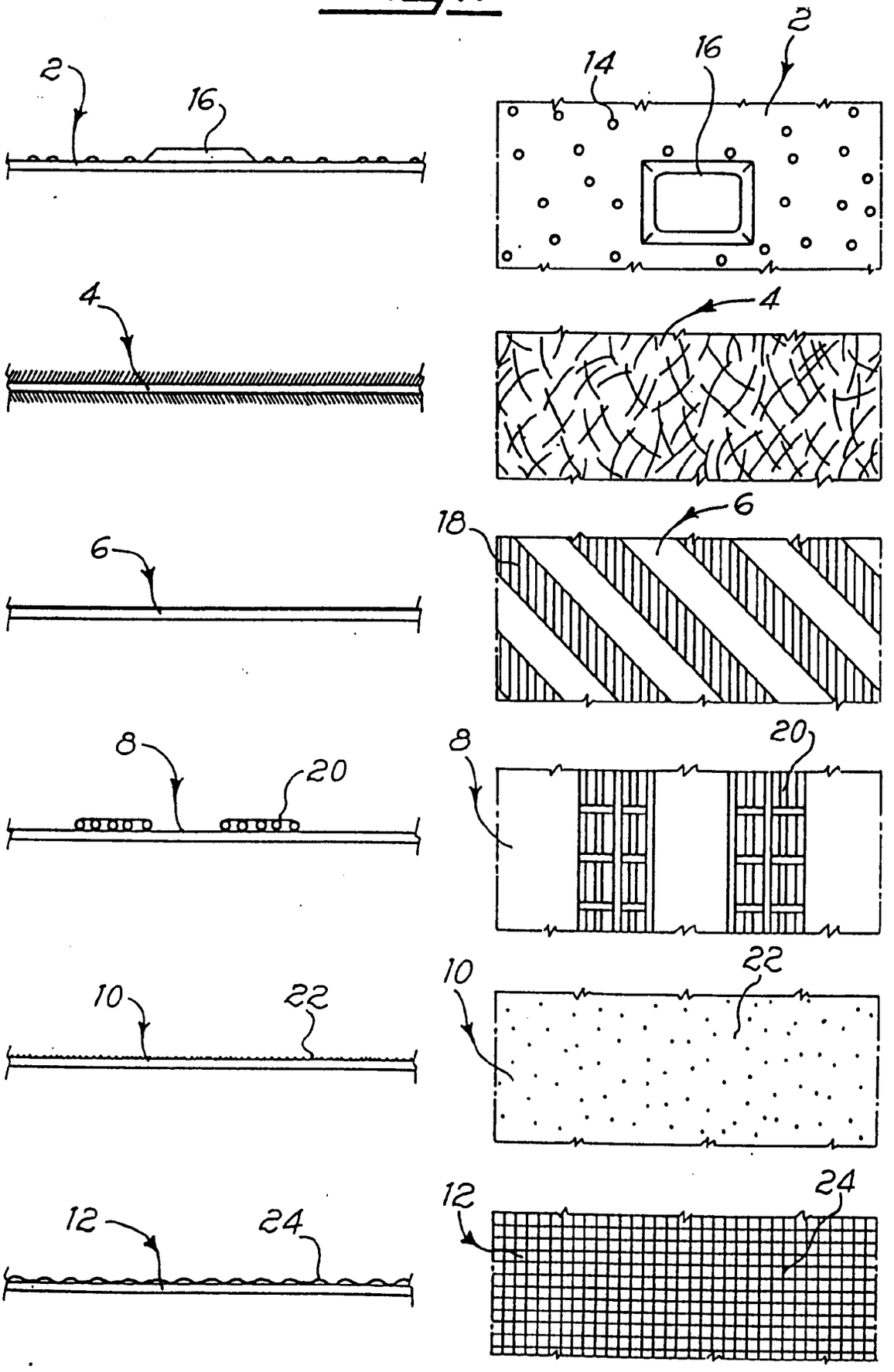

Fig.2

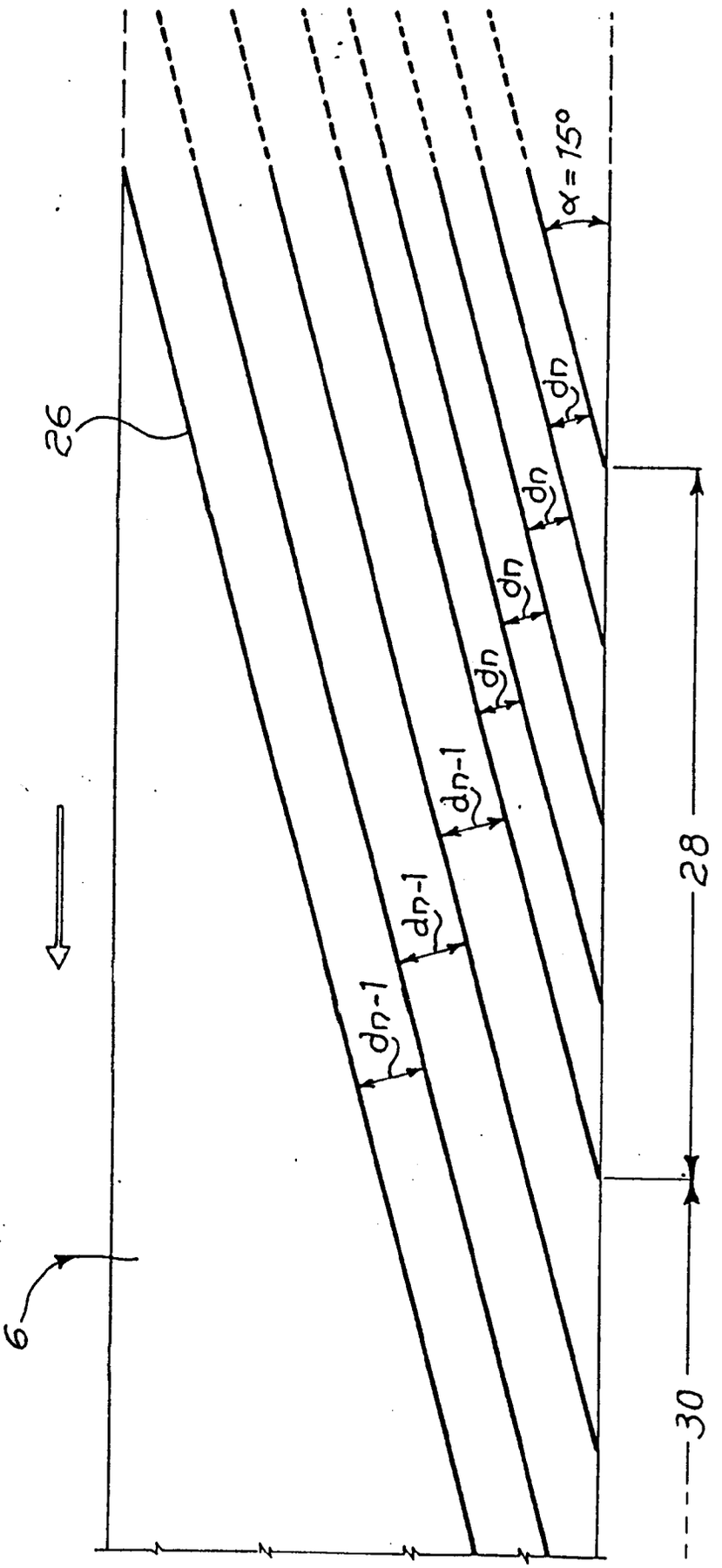

Fig.3

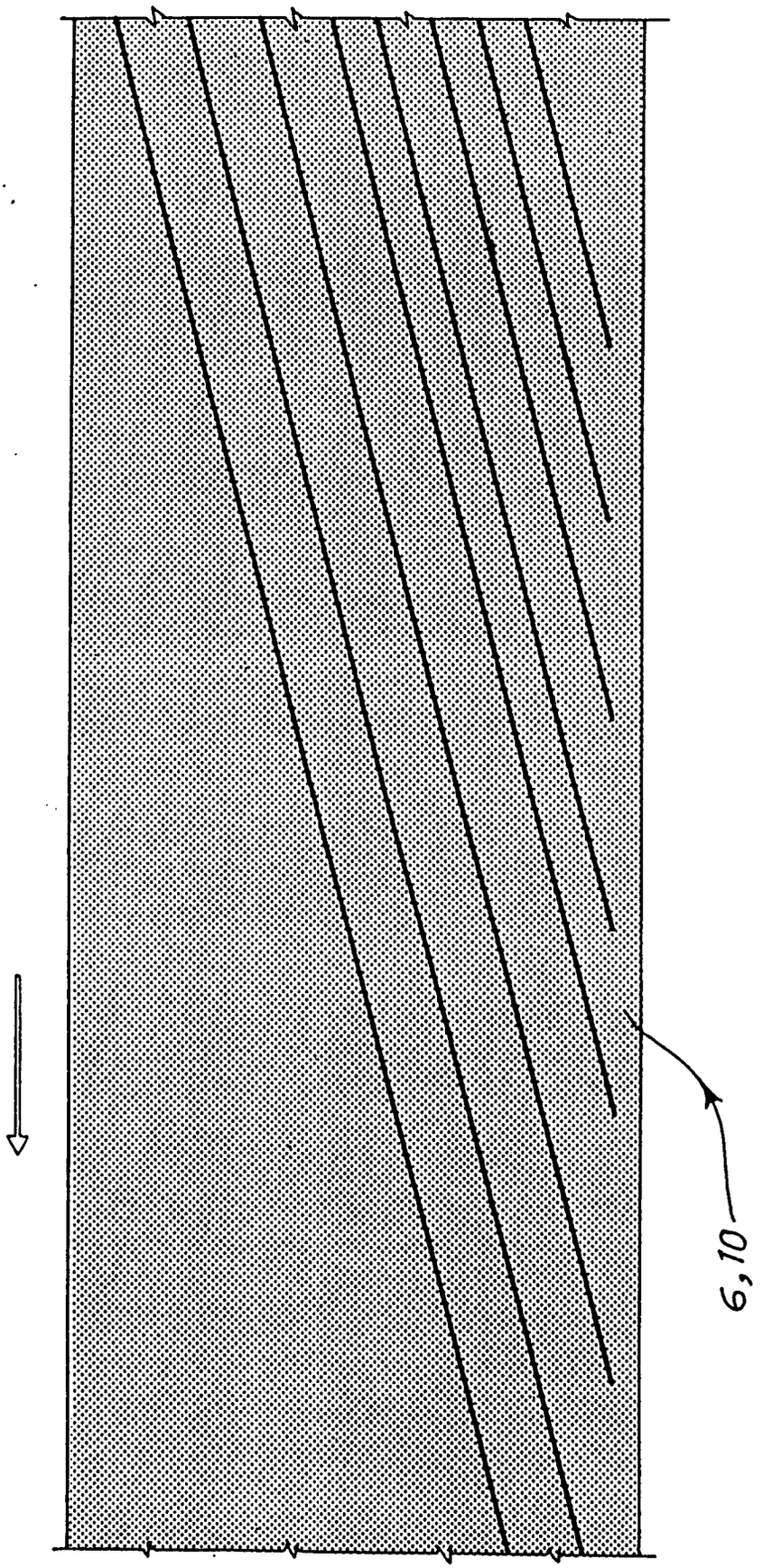

Fig.4

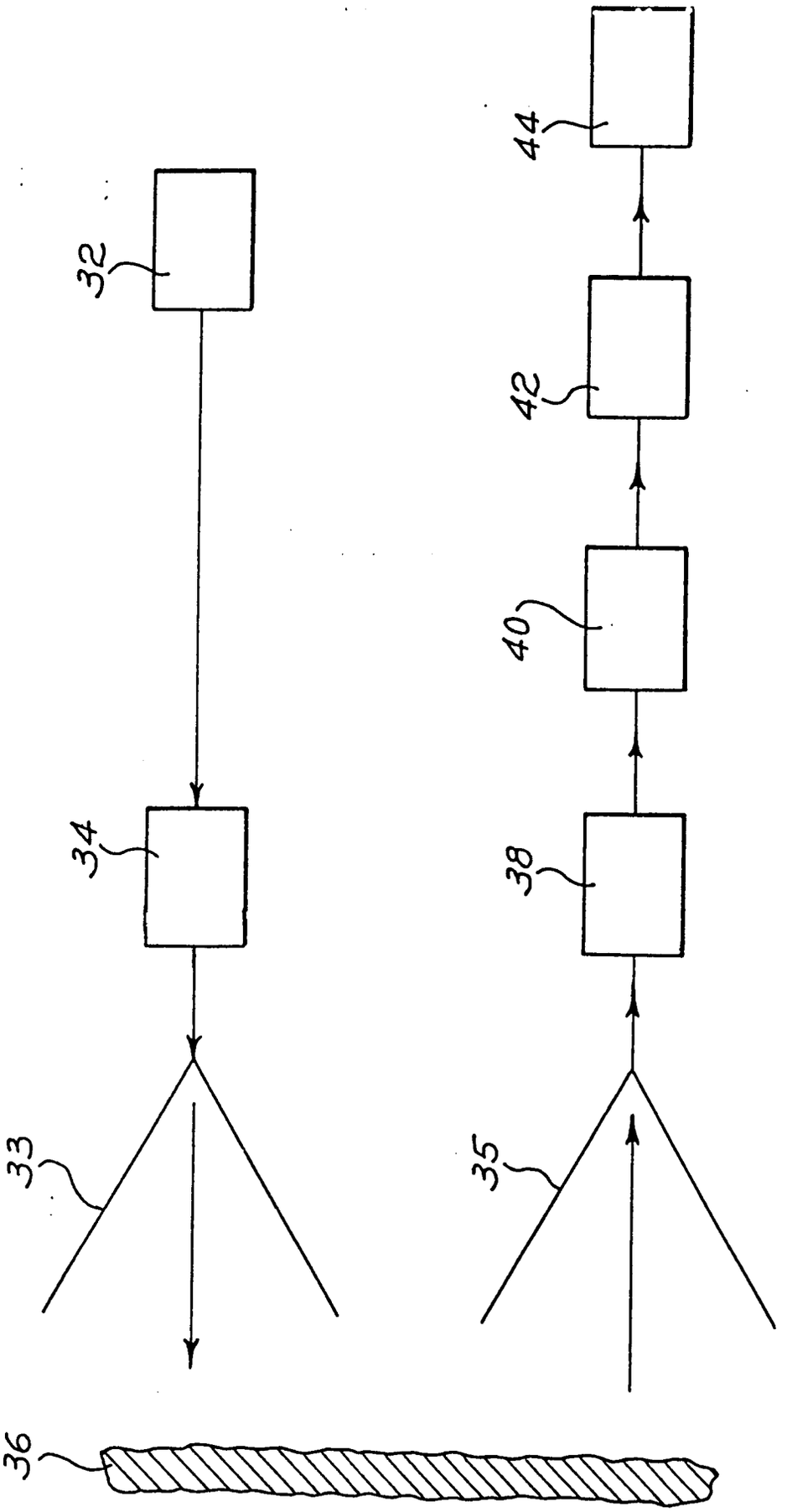

Fig.5

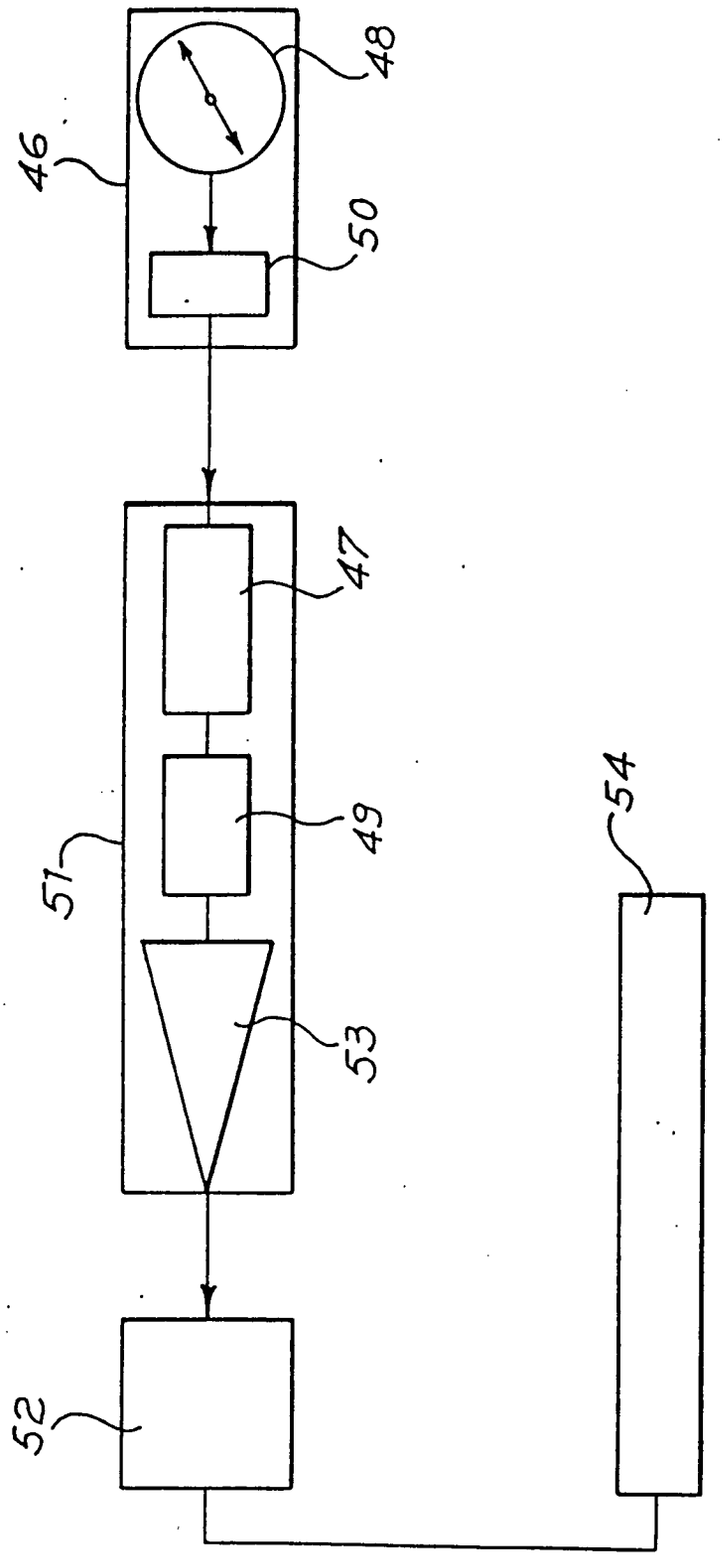
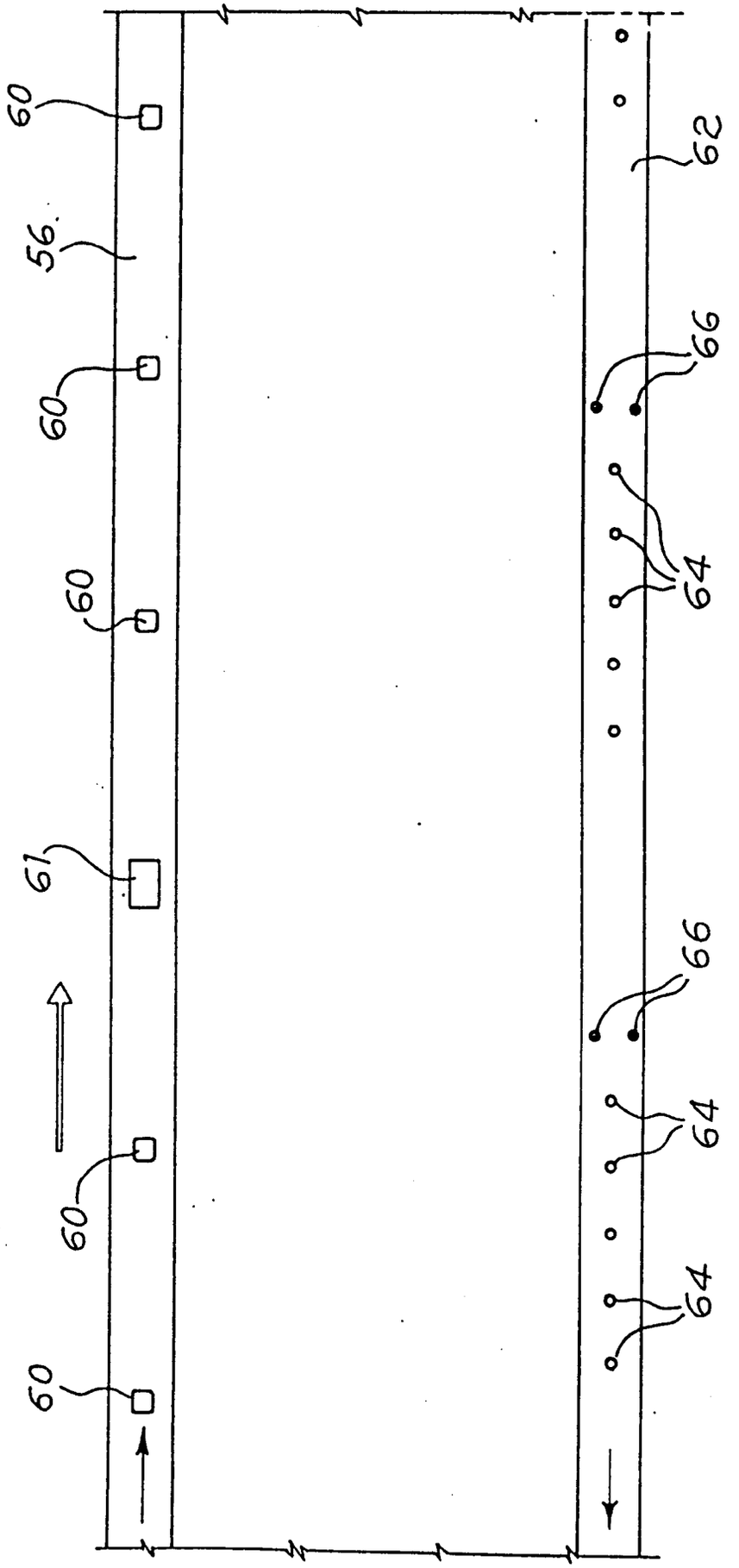
Fig.6