(19) Europäisches Patentamt
European Patent Office
Office européen des brevets

(11) EP 0 523 304 B1

(12) **EUROPEAN PATENT SPECIFICATION**

(45) Date of publication and mention of the grant of the patent:
24.04.1996 Bulletin 1996/17

(51) Int. Cl.[6]: **B42D 15/10**

(21) Application number: **91401958.3**

(22) Date of filing: **15.07.1991**

(54) **Passport comprising an engraved face photograph display sheet**

Pass mit einem ein graviertes Portraitfoto enthaltendem Blatt

Passeport comprenant une feuille avec photo d'identité gravée

(84) Designated Contracting States:
DE ES FR GB IT

(43) Date of publication of application:
20.01.1993 Bulletin 1993/03

(73) Proprietor: **EPC TECHNOLOGY CO., LTD.**
Itabashi-ku, Tokyo 174 (JP)

(72) Inventor: **Suzuki, Akira**
Kawaguchi-shi, Saitama 332 (JP)

(74) Representative: **Peuscet, Jacques et al**
SCP Cabinet Peuscet et Autres,
68, rue d'Hauteville
F-75010 Paris (FR)

(56) References cited:
EP-A- 0 113 228
EP-A- 0 372 837
US-A- 2 395 804
US-A- 3 930 924

Note: Within nine months from the publication of the mention of the grant of the European patent, any person may give notice to the European Patent Office of opposition to the European patent granted. Notice of opposition shall be filed in a written reasoned statement. It shall not be deemed to have been filed until the opposition fee has been paid. (Art. 99(1) European Patent Convention).

EP 0 523 304 B1

Printed by Rank Xerox (UK) Business Services
2.11.2/3.4

Description

BACKGROUND OF THE INVENTION

Field of the Invention

The present invention relates to an engraved face photograph display sheet and a face photograph display sheet to be collated with an identification face photograph, and a certificate for use with the sheets, and more particularly, to an engraved face photograph display sheet, a face photograph display sheet and a certificate for use with the sheets which can be inserted together with sheets, on which necessary articles are mentioned, into an identification notebook, such as a passport, a certificate or the like.

In the present invention, besides the passport, a stock certificate, a bankbook, a personal check, a car registration certificate and the like are given as examples of the identification certificate.

Description of the Related Art

Conventionally, a face photograph, which is attached to various kinds of certificates, such as a passport, is taken by the applicant, pasted on a prescribed sheet of a certificate, sealed to prevent forgery, and covered with a transparent sticker.

However, since the photograph tends to peel in the above adhesion method, it is possible that the certificate will be forged or altered by exchanging the photograph for another photograph. For example, if a traveler has his passport stolen or has lost his passport, the passport may be abused and the traveler may sustain an unexpected loss.

US-A-3,930,924 describes an engraved display sheet comprising an engraving portion, at least said engraving portion being formed of a synthetic resin material, and an engraved image, said engraved image being positioned at said engraving portion of said display sheet; therefore, the sheet has high durability; according to this patent, it is also possible to engrave said image on a layer buried in the synthetic resin material; so, the sheet is more unlikely to be damaged by friction compared with the case in which a photograph is pasted on the sheet. But, this document discloses engraving on a colored layer to form an engraved image, said colored layer being formed by applying, printing or drawing a paint or ink composition having a coloring agent, the colored layer being applied by brush-painting, roll-coating, offset or relief printing, or laminating; thus, the engraving is performed to form a colored image, and the display sheet is expensive.

To judge whether an adhering photograph on a document is exchanged for another photograph and to prevent forgery, it is known from US-A-2,395,804 to prepare a document comprising a record bearing sheet from a white paper non transparent by reflected light but of relatively high transparency by transmitted light, a photographic print paper with a photographic emulsion layer thereon containing a developed photographic image, the same as the adhering photograph on the document; this developed photographic image is normally invisible from the front of the document but is visible by strong transmitted light and may be compared with the adhering photograph; so, this identification card provides identification means that cannot be tampered but its manufacturing is complicated and such a card is so expensive.

Thus, the identification and verification facilities according to the state of the art are all rather expensive and complicated and they are not specially adapted to be used in passports.

SUMMARY OF THE INVENTION

In order to solve the above conventional problem, the inventor of the present invention conducted various examinations and found that it was possible to easily judge whether an adhering photograph is exchanged for another photograph and to perfectly prevent forgery by engraving a face photograph or a two-tone (for example, black and white or brown and white) photograph on a synthetic resin sheet according to a face photograph adhering at the time of application, so that the inventor has developed the present invention.

An object of the present invention is to provide a passport, comprising a plurality of sheets; a photograph portion and an engraving portion, at least said engraving being formed of a synthetic resin material; an identifying photographic image fixedly attached at said photograph portion, and an engraved verification image, said verification image being substantially the same as said identifying photographic image and being positioned at said engraving portion; said engraving portion and said photograph portion being positioned on said plurality of sheets of said passport. Therefore, even if an adhering face photograph is exchanged for another photograph, it is possible to easily execute identification and to completely prevent forgery by collating and comparing (checking in the same manner as a normal engraved printing) the face photograph with an engraved face photograph displayed on an engraved face photograph display sheet or a face photograph display sheet of the present invention.

BRIEF DESCRIPTION OF THE DRAWINGS

Fig. 1 is a partial enlarged sectional view showing an example in which a colored engraving base layer is disposed on a synthetic resin sheet;

Fig. 2 is a partial enlarged sectional view showing the state in which the colored engraving base layer is attached by heat and pressure;

Fig. 3 is a perspective view showing the state in which a passport is open; and

Fig. 4 is a view of a structure of a conventional known engraving apparatus.

DESCRIPTION OF THE PREFERRED EMBODIMENTS

The present invention will be now described in more detail with reference to the illustrated embodiments. However, the present invention is not limited to these embodiments.

Figs. 1 and 2 are sectional views showing an embodiment of a process of producing the present invention, and Fig. 3 is a perspective view showing the state in which a passport is open.

First, a face photograph display sheet 12 is formed in the same shape as each sheet 11 in a passport 1Ø shown in Fig. 3 by using a synthetic resin sheet approximately Ø.1 to Ø.2mm in thickness. Then, an engraved face photograph 15 with density gradation is engraved at a proper portion of the face photograph display sheet 12 by means of a conventional known engraving apparatus, described below, based on a photograph 13 attached in the same manner as on a conventional passport. As a result, a passport in which the engraved face photograph display sheet is inserted and fastened can be produced.

In the above case, the face photograph is directly engraved on a surface layer at a predetermined portion of the synthetic resin sheet. Next, the case, in which a colored engraving base layer is unitedly buried in a synthetic resin sheet and a face photograph is engraved on the colored engraving base layer, will be described.

In the same manner as above, a face photograph display sheet 12 is formed in the same shape as each sheet 11 in a passport 1Ø by using a synthetic resin sheet 1 of approximately Ø.1 to Ø.2mm in thickness. Then, as shown in Fig. 1, a colored engraving base layer 2 is mounted on the face photograph display sheet 12 (the synthetic resin sheet 1). In order to mount the colored engraving base layer, a method of applying paints, ink composite or the like or a printing method, such as offset printing, can be used. Next, as shown in Fig. 2, the face photograph display sheet 12 provided with the colored engraving base layer 2 is applied with heat and pressure by means of a heating plate, a heating roller or the like so as to bury the colored engraving base layer 2 into the face photograph display sheet 12 (the synthetic resin sheet 1) and form a smooth plane unitedly composed of the colored engraving base layer 2 and the face photograph display sheet 12 (the synthetic resin sheet 1).

After that, a face photograph 16, which is a black and white shaded image with density gradation, is engraved at a proper portion 14 of such face photograph display sheet 12 by means of a conventional known engraving apparatus, described below, according to a photograph 13 attached in the same manner as in a conventional passport, so that a passport in which the face photograph display sheet is inserted an fastened can be produced.

Fig. 4 is a structural view of a conventional known engraving apparatus and shows the mechanism for engraving an engraved face photograph or a face photograph at a proper portion of a sheet according to a photograph document. The apparatus is disclosed in Japanese Patent Publication (Kokoku) No.54-3141Ø, No.54-25451 and so on.

As shown in Fig. 4, numeral 21 denotes a scanning head provided with a light source lamp and a multiplication tube, and numeral 22 denotes an engraving head provided with an engraving stylus which vibrates up and down. A document pedestal 23 for laying a photograph document 28 thereon and an engraving pedestal 24 for laying a sheet 29 thereon are respectively disposed under both heads 21 and 22 and connected to a swing arm 26 through a swing lever 25.

In the above arrangement, a spotlight from the light source in the scanning head 21 shines a point on the photograph document 28, the light reflected from the point enters the light multiplication tube, and photoelectric current in accordance with the amount of the light reflected from the photograph document 28, that is, the shade of the photograph document 28 arises. The photoelectric current passes through a proper calculation amplification circuit and controls the degree to which the stylus of the engraving head 22 cuts into the sheet 29 (precisely, the colored engraving base layer disposed on a proper portion of the sheet 29).

Since the tip of the stylus is pyramidal, if the stylus cuts deep into the sheet 29, the area of a concave portion is large and the area of the remained portion of the sheet 29 is small. In other words, that corresponds to a highlight portion of the photograph document 28. On the other hand, if the stylus cuts shallowly, the area of the concave portion is small, the area of the remained portion is large, and that corresponds to a shadow portion of the photograph document 28. Thus, an engraved image with density gradation, such as a face photograph, is formed.

The number of lines in the direction of the reciprocation movement of the engraving pedestal 24 is determined by adding a periodical intermittent movement in accordance with the desired number of lines and the speed of the reciprocation movement of the pedestal to the up and down movement of the stylus in accordance with the shades.

When a line is cut in a reciprocation movement of the engraving pedestal 24, the engraving head 22 and the scanning head 21 connected to the engraving head 22 through a lateral transport lever 27 are laterally moved by a pitch in accordance with the number of lines. Then, another line is cut by a reciprocation movement of the engraving pedestal 24.

According to such operations, it is possible to cut the surface layer at a proper portion of an optional face photograph display sheet 12 (the synthetic resin sheet 1) or a portion of the colored engraving base layer 2 buried in the sheet 12 and to produce an engraved image or a black and white shaded image of an optional face photograph on the photograph document 28.

The kind of the synthetic resin sheet 1 forming the face photograph display sheet 12 is particularly not lim-

ited, the sheet may be made of a conventional plastic material, such polyvinyl chloride resin, polyolefine resin or the like.

Furthermore, as a coloring agent in the paints or the ink composite used to mount the colored engraving base layer 2, a conventional inorganic pigment, a conventional organic dye or pigment or the like can be used.

As described above, according to the engraved face photograph display sheet, the face photograph display sheet and the certificate for use with the sheets, even if the attached photograph is exchanged for another photograph, since it is impossible to exchange the engraved face photograph, which is a black and white shaded image, of the present invention, identification can be easily and certainly performed. Therefore, it is possible to extremely effectively utilize an identification notebook, such as a passport, a certificate and so on.

Claims

1. A passport, comprising:

   - a plurality of sheets (11);
   - a photograph portion and an engraving portion, at least said engraving portion being formed of a synthetic resin material (1);
   - an identification face photograph (13) fixedly attached at said photograph portion;
   - an engraved face photograph (15, 16) being substantially the same as said identification face photograph (13) and being positioned at said engraving portion;

   wherein said engraving portion and said photograph portion are positioned on said plurality of sheets (11) so as to enable a collation of the identification face photograph (13) with the engraved face photograph (15, 16).

2. The passport as claimed in Claim 1, wherein said photograph portion is on one sheet of said passport (10), and said engraving portion is on another sheet of said passport.

3. The passport as claimed in at least one of the preceding Claims, wherein said engraved face photograph (15) is formed directly on a surface of said synthetic resin material.

4. The passport as claimed in at least one of Claims 1-3, further comprising a coloured engraving layer (2) formed on said synthetic resin material (1) and having an engraving surface flush with a surface of said synthetic resin material (1), wherein said engraved face photograph (16) is formed on said coloured engraving layer (2).

5. The passport as claimed in at least one of the preceding Claims, wherein the sheet of the engraved face photograph (11) has a thickness from about .1 mm to about .2 mm.

6. The passport as claimed in at least one of the preceding Claims, wherein said synthetic resin material (1) comprises at least one of polyvinyl chloride resin and polyolefine resin.

Patentansprüche

1. Paß mit

   - einer Mehrzahl von Blättern (11),
   - einem photographischen Teil und einem gravierten Teil, von denen wenigstens der gravierte Teil aus Kunststoff besteht,
   - einem Identifikations-Portraitphoto (13), das auf dem photographischen Teil fest angebracht ist,
   - einem gravierten Portraitphoto (15, 16), das im wesentlichen mit dem Identifikations-Portraitphoto (13) übereinstimmt und in dem gravierten Teil angordnet ist,

   dadurch gekennzeichnet, daß der gravierte Teil und der photographische Teil so auf den Blättern (11) angeordnet sind, daß ein gegenüberstellender Vergleich zwischen dem Identifikations-Portraitphoto (13) und den gravierten Portraitphoto (15, 16) möglich ist.

2. Paß nach Anspruch 1, dadurch gekennzeichnet, daß sich das Identifikations- Portraitphoto auf einem Blatt des Passes (10) und das gravierte Portraitphoto auf einem anderen Blatt des Passes befindet.

3. Paß nach einen der vorhergehenden Ansprüche, dadurch gekennzeichnet, daß das gravierte Portraitphoto (15) unmittelbar in eine Oberfläche des Kunststoffmaterials eingearbeitet ist.

4. Paß nach einen der vorhergehenden Ansprüche mit einer farbigen Gravierschicht (2), die auf dem Kunststoffmaterial ausgebildet ist und eine Gravieroberfläche hat, die bündig mit einer Oberfläche des Kunststoffmaterials (1) ist, dadurch gekennzeichnet, daß das gravierte Portraitphoto (16) in die farbige Gravierschicht (2) eingearbeitet ist.

5. Paß nach einem der vorhergehenden Ansprüche, dadurch gekennzeichnet, daß das Blatt (11) mit dem gravierten Portraitphoto eine Stärke zwischen etwa 0,1 mm bis 0,2 mm hat.

6. Paß nach einem der vorhergehenden Ansprüche, dadurch gekennzeichnet, daß das Kunststoffmaterial (1) wenigstens Polyvenylchlorid und/oder Polyolefin enthält.

Revendications

1. Passeport, comprenant :

   - une pluralité de feuillets (11) ;
   - une partie photographie et une partie gravure, ladite partie gravure au moins étant faite en une résine synthétique (1) ;
   - une photographie d'identité de face (13), fixée sur ladite partie photographie ;
   - une photographie de face gravée (15, 16), sensiblement identique à ladite photographie d'identité de face (13) et située dans ladite partie gravure ;

   dans lequel ladite partie gravure et ladite partie photographie sont placées sur ladite pluralité de feuillets (11) de manière à permettre le collationnement de la photographie d'identité de face (13) et de la photographie de face gravée (15, 16).

2. Passeport selon la revendication 1, dans lequel ladite partie photographie est située sur un feuillet dudit passeport (10), ladite partie gravure étant située sur un autre feuillet dudit passeport.

3. Passeport selon au moins l'une des revendications précédentes, dans lequel ladite photographie de face gravée (15) est formée directement sur une surface de ladite résine synthétique.

4. Passeport selon au moins l'une des revendications 1 à 3, comprenant en outre une couche colorée à graver (2), formée sur ladite résine synthétique (1) et présentant une surface à graver, de niveau avec une surface de ladite résine synthétique (1), dans lequel ladite photographie de `face gravée (16) est formée sur ladite couche colorée à graver (2).

5. Passeport selon au moins l'une des revendications précédentes, dans lequel le feuillet (11) de la photographie de face gravée a une épaisseur comprise entre environ 0,1 mm et environ 0,2 mm.

6. Passeport selon au moins l'une des revendications précédentes, dans lequel ladite résine synthétique (1) comprend au moins l'une des résines de chlorure de polyvinyle et de polyoléfine.

FIG.1

FIG.2

FIG.3

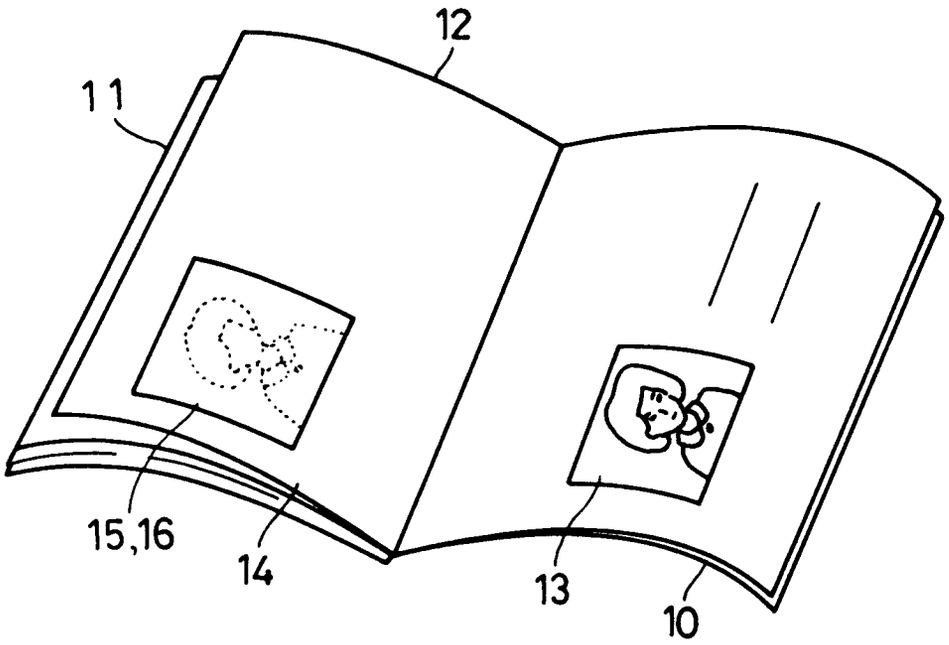
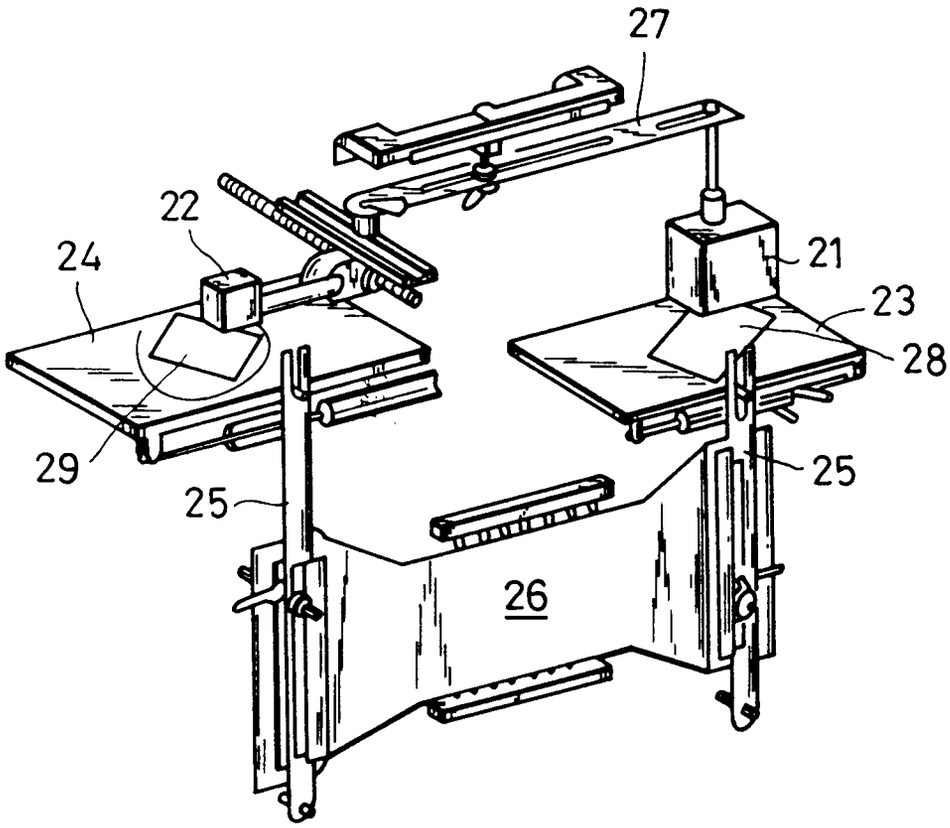
FIG. 4