(19) Europäisches Patentamt
European Patent Office
Office européen des brevets

(11) EP 0 974 384 A2

(12) **EUROPEAN PATENT APPLICATION**

(43) Date of publication:
26.01.2000 Bulletin 2000/04

(51) Int. Cl.[7]: **A63H 33/42**

(21) Application number: **98500282.3**

(22) Date of filing: **28.12.1998**

(84) Designated Contracting States:
AT BE CH CY DE DK ES FI FR GB GR IE IT LI LU MC NL PT SE
Designated Extension States:
AL LT LV MK RO SI

(30) Priority: **21.07.1998 ES 9801955 U**

(71) Applicant:
Gil Rodriguez, José Maria
08226 Terrasa, Barcelona (ES)

(72) Inventor:
Gil Rodriguez, José Maria
08226 Terrasa, Barcelona (ES)

(74) Representative:
Davila Baz, Angel
c/o Clarke, Modet & Co.,
Avda. de los Encuartes 21
28760 Tres Cantos (Madrid) (ES)

(54) **Improved assembly mockup**

(57) Improved assembly mock-up, which reproduces any object, figure or construction and which is obtained by means of the assembly of one or more Bristol board templates or the like, said template or templates being suitably die-cut and independent, and which are complemented with narrow independent strips and of the same material, said strips being provided with a longitudinal recessed line. Sections are cut from said strips by means of which the attachment and assembly of the body obtained as from the die-cut template or templates are obtained.

FIG. 2

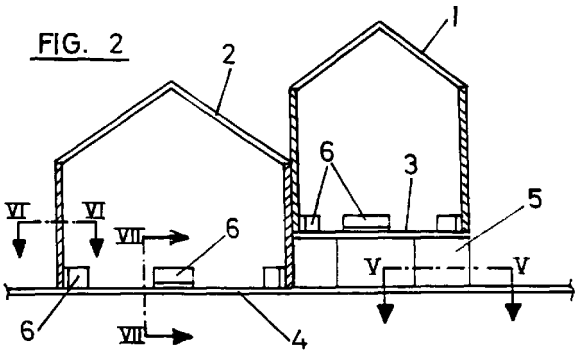

EP 0 974 384 A2

Description

OBJECT OF THE INVENTION

[0001] The invention refers to an assembly mock-up with the particularity that it is constructed based on Bristol board templates or the like, suitably independent and die-cut in accordance with the mock-up which is intended to be obtained, in such a way, that the assembly is carried out by means of auxiliary sheet strips, also of Bristol board, independent from the templates.

[0002] An object of the invention is to provide a new system for obtaining mock-ups based on previously die-cut templates which lack overlaps and any other additional attachment means, since the union or assembly is achieved by means of narrow independent strips and of the same material.

DESCRIPTION OF THE INVENTION

[0003] The proposed mock-up is based on the fact that the Bristol board which shall configure the structure of the same is supplied in suitably die-cut manner, saving the user from having to trim the same, as traditionally occurs.

[0004] Also, the template or templates by means of which, the mock-up is to be constructed or assembled, is not provided with the classical overlaps for their bonding and assembly, since this is carried out with the collaboration of auxiliary sheet parts, in the manner of strips, independent from the templates and which are fixed to the joining panels by their internal surface, with the particularity, that such strips, also of Bristol board, are supplied with the template and are equipped with a longitudinal recessed line, preferably with central arrangement, to facilitate their folding.

[0005] Once the mock-up structure is obtained by means of the assembly of the template or templates which are initially extended, and which are fixed by means of said strips so as to maintain the assembly of the mock-up in question, the elements which constitute the finish or external surface of the same shall be placed, said elements being parts which simulate the finish of the construction to be reproduced with the mock-up.

[0006] Since parts may exist in specific constructions which are placed at different level on the ground, simulating slopes of the terrain, it has been provided that in these cases, the mock-up shall be assembled on two base sheets or Bristol boards, placed at different levels, in such a way, that the highest Bristol board is placed on the lowest Bristol board by means of columns which are mounted and attached to the two base sheets by means of the same auxiliary sheet parts.

[0007] Evidently, this manner of obtaining and assembling of a mock-up results to be not only easier for the manufacturer to obtain, since attachment overlaps are not required, but also, they are much simpler and even more entertaining for the user, as final consignee, who has to assemble the mock-up, since it is sufficient to fold the template or templates along the corresponding previously marked recessed lines, so as to subsequently carry out the attachment for maintaining the assembly by means of strips of the same material provided with recessed lines which make possible and facilitate their folding.

DESCRIPTION OF THE DRAWINGS

[0008] In order to complement the description which is being carried out and with the object of better aiding the understanding of the characteristics of the invention according to a preferred practical embodiment example of the same, a set of drawings are enclosed forming integral part of said description, in which, with illustrative and non limitative character, the following has been represented:

Figure 1 shows a perspective general view of a mock-up embodied according to the object of the invention, and which corresponds to a two bodied construction placed at different heights or levels.

Figure 2 shows a cross sectional view on a vertical plane of the mock-up represented in the previous figure, leaving on view, the different heights or slopes between both construction bodies, the one with the greatest height joined to the base Bristol board by means of tubular columns of the same material.

Figure 3 shows the development corresponding to the template, parting from which one of the two mock-up bodies represented in the previous figures is obtained.

Figure 4 shows a section of the strip constituting the auxiliary piece which intervenes in the maintenance or attachment of the assembly corresponding to the mock-up body.

Figure 5 shows a cross sectional view corresponding to line V-V of figure 2, representing the tubular column and the folded strip through its longitudinal and middle line, which intervenes in the attachment and maintenance during the assembly of said tubular column.

Figure 6 and 7 show diverse cross sectional details corresponding to lines VI-VI and VII-VII represented in figure 2.

PREFERRED EMBODIMENT OF THE INVENTION

[0009] As may be observed in said figures, the mock-up, which may adopt any configuration and reproduce

specific constructions, buildings, etc., is determined by one or more suitably mounted bodies, and obtained parting from a template.

[0010] In the case represented in the figures, the mock-up is made up of two bodies (1) and (2) obtained parting from a template (P), as is represented in figure 3, observing in figures 1 and 2, how said mock-up bodies (1) are placed at different levels, and how each one of them are placed on a platform constituted in each case by a Bristol board, referenced with (3) for the body (1) and referenced with (4) for the body (2), with the particularity that the Bristol board (3) or assembly platform of the mock-up body (1) is in turn placed on the lower Bristol board (4) or platform, placed at a lower level, by means of columns (5), which are tubular, and which are mounted and attached to said base Bristol boards or platforms (3) and (4), attachment which is carried out by means of auxiliary sheet parts (6) constituted or obtained as from a strip, as is represented in figure 4, of scarce width and provided with a central and longitudinal recessed line (7) which facilitates its folding.

[0011] Thus, in figure 5, a tubular column (5) may be observed, which corresponds to line V-V of figure 2, where the mounting of said column is achieved by means of the angular forming of a strip section (6), said angular forming being carried out by folding along the central and longitudinal recessed line (7) represented in figure 4, in such a way that by bonding said strip section (6) which is suitably bonded on the internal surface of the joining dihedral of the edges corresponding to the tubular column (5), the same is kept perfectly mounted, the same occurring with the maintenance and attachment to each other of the free edges corresponding to the templates (P) by means of which bodies (1) and (2) are obtained, or of any other bodies which form or determine the structure of a mock-up.

[0012] Diverse sectional cuts of the mock-up body (2) may be equally observed in figure 6 and 7, with the strip sections (6) used in the maintenance of the mounting or attaching to each other, in one case, of the free edges of the template (P) which form said body (2), and in another case, the attachment of the body (2) to the lower base Bristol board or lower platform (4).

[0013] It is not considered necessary to make this description more extensive in order that any expert in the Art may understand the scope of the invention and the advantages derived from the same.

[0014] The materials, shape, size and arrangement of the elements shall be capable of variation provided this does not imply an alteration in the essentiality of the invention.

[0015] The terms in which this Specification has been expressed shall always be taken in the wide and non limitative sense.

Claims

1. Improved assembly mock-up, corresponding to the reproduction of any object, figure, construction, known or unknown, and which is obtained by means of the assembly of one or more Bristol board templates or the like, characterised in that the template or templates are suitably die-cut and independent, and which are complemented with narrow strips, also independent and of the same material, provided with a longitudinal recessed line, from which sections are obtained by means of which, the attachment and maintenance of the mounted body obtained as from the die-cut templates is carried out.

2. Improved assembly mock-up, according to claim 1, characterised in that the attachment of the strips to the template in order to maintain the assembly is carried out on the internal part of the same, in correspondence with the corresponding surfaces of the free edges to be joined of the actual template.

3. Improved assembly mock-up, according to the previous claims, characterised in that the body or bodies, once assembly and determinants of the mock-up structure, are capable of being attached to a lower platform made up of a Bristol board material, the attachment being performed by means of sections of the same and of narrow strips provided with the longitudinal recessed line.

4. Improved assembly mock-up, according to the previous claims, characterised in that the joining to each other of the Bristol boards which determine the platforms at different levels or heights in one same mock-up structure, is carried out by means of tubular sections the assembly of which is equally held by a section of the narrow strip equipped with the longitudinal recessed line.

5. Improved assembly mock-up, according to the previous claims, characterised in that the mock-up structure is externally provided with respective finishing parts which simulate the external surface of the construction or object which it reproduces or which is involved.

FIG. 1

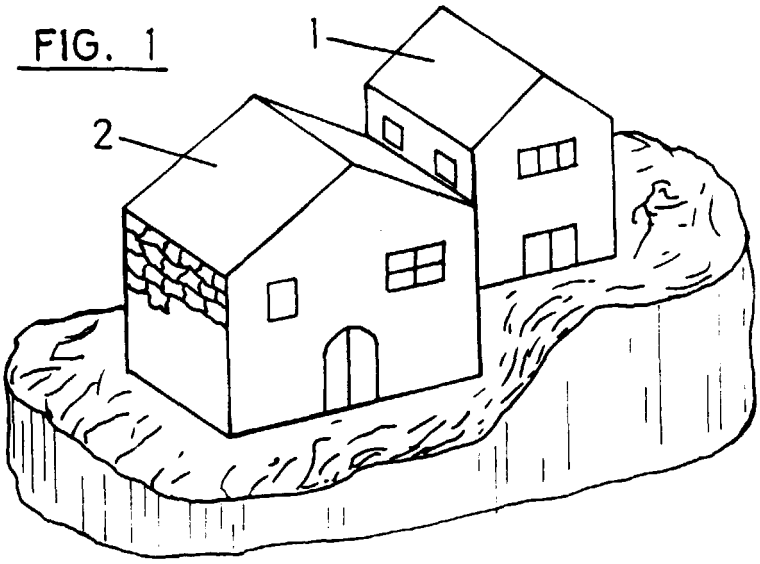

FIG. 2

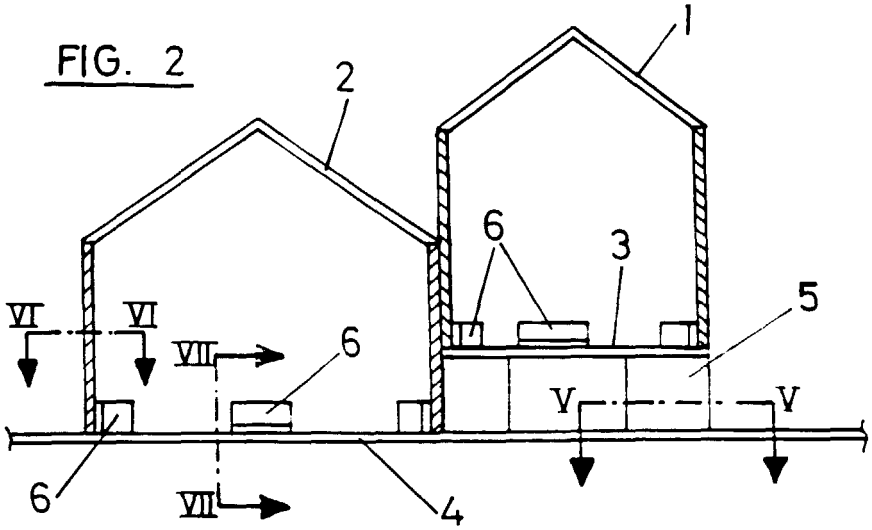

FIG. 3

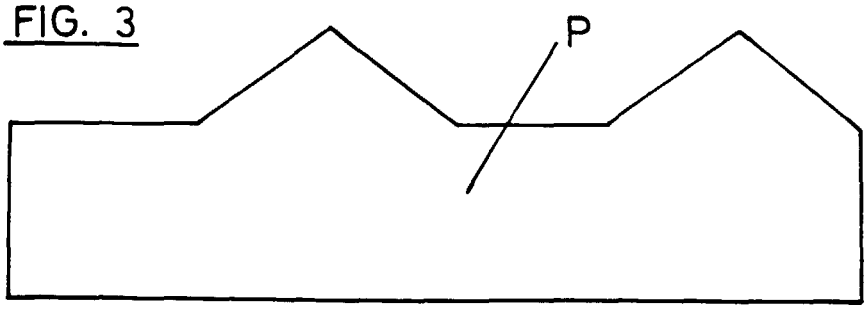

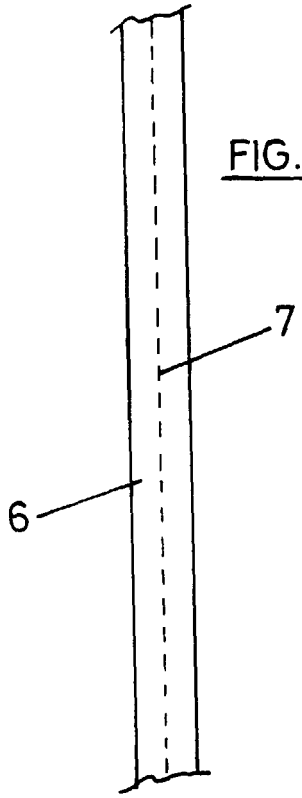

FIG. 4

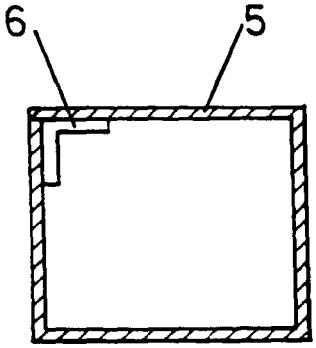

FIG. 5

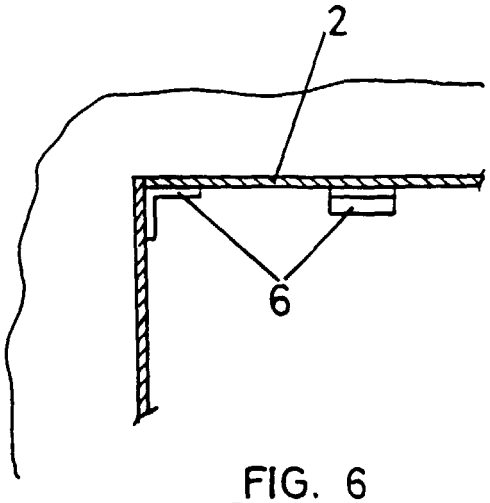

FIG. 6

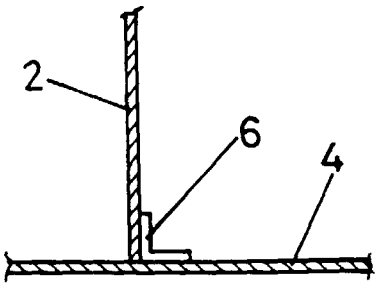

FIG. 7