(19) Europäisches Patentamt
European Patent Office
Office européen des brevets

(11) EP 1 101 430 A1

(12) EUROPEAN PATENT APPLICATION

(43) Date of publication:
23.05.2001 Bulletin 2001/21

(51) Int Cl.[7]: **A47J 31/06**, B65D 81/00

(21) Application number: **00310131.8**

(22) Date of filing: **15.11.2000**

(84) Designated Contracting States:
AT BE CH CY DE DK ES FI FR GB GR IE IT LI LU MC NL PT SE TR
Designated Extension States:
AL LT LV MK RO SI

(30) Priority: **16.11.1999 US 165663 P**
03.05.2000 US 201660 P

(71) Applicant: **Hale, Robert**
Scarborough, Ontario M1R 4G3 (CA)

(72) Inventor: **Hale, Robert**
Scarborough, Ontario M1R 4G3 (CA)

(74) Representative: **Harland, Linda Jane**
c/o Reddie & Grose
16 Theobalds Road
London WC1X 8PL (GB)

(54) **Beverage filter cartridge system**

(57) A disposable stepped beverage filter cartridge system for brewing different types of single serving beverages. The stepped beverage filter cartridge system comprises a sealed stepped container (12), a filter element (16) internally subdividing the container to form a brewing chamber, a beverage powder (20) contained in the brewing chamber, liquid inlet means piercing the container to provide hot pressurized water to the brewing chamber and a liquid outlet means to allow for extracted beverage product to be removed and collected.

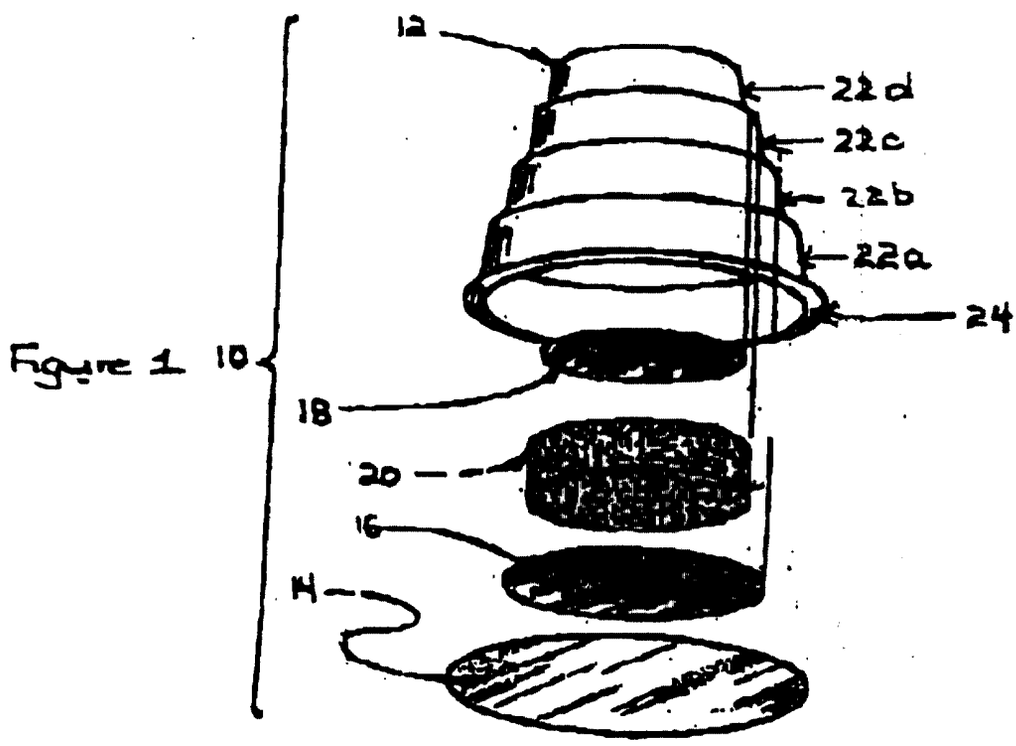

Figure 1

EP 1 101 430 A1

Description

Field of the Invention

[0001] This invention relates to a beverage filter cartridge, and more particularly to a disposable stepped beverage filter cartridge system for brewing different types of single serving beverages.

Background of the Invention

[0002] Single serving beverage coffee devices are very popular because they provide a single serving of fresh coffee quickly. Several different types of beverage server devices have been developed for making a single beverage server for both coffee and tea. One such device is a disposable container which fits on top of a cup and has a compartment for receiving a beverage extract with a large reservoir on top into which boiling water is provided. While devices are convenient to use due to the fact that the coffee is exposed to the air and the flow rate of the extracted beverage slow, the resultant extracted coffee is not as fresh and tasty as would be desired.

[0003] Another device comprises a sealed receptacle in which a sealed filter is provided and supported by a support member. When the filter is wetted it sags and conforms to the support member which has a small hole in it to release the filtered beverage. Again, this device is convenient to use but provides for low flow rates and consequently, a less than desired extracted coffee product.

[0004] U.S. Patent No. 5,325,765 discloses a beverage filter cartridge having a self supporting wettable filter that provides an enlarged filter outflow chamber. U. S. Patent No. 5,840,189 discloses an imperforate beverage filter cartridge adapted to hermetically contain a beverage extract which is pierceable to accommodate injection of liquid into the cartridge for combining with the extract and produce a beverage. In both of these patents, the filters are substantially cone shaped and the water is introduced at the top of cartridge. This results in an uneven mixing of the introduced water with the beverage powder or extract and consequently, the resultant beverage is not as tasty as desired.

[0005] There is therefore a need to develop a simple and cost efficient beverage filter cartridge which obviates at least one problem associated with the prior art cartridges.

Summary of the Invention

[0006] In accordance with the present invention there is provided a novel beverage filter cartridge system for brewing different types of single serving beverages. The beverage filter cartridge system provides for a single serving of a desired beverage in a rapid manner and is fully disposable after a single use. The unique shape and configuration of the cartridge is a stepped conical shape which provides for a maximal extraction of the desired beverage powder with an aqueous medium resulting in a superior and better flavoured product.

[0007] The beverage filter cartridge is preferably made containing coffee or tea however it may be manufactured to contain a variety of beverage powders including soups, hot chocolate, herbal teas and specialized drinks. Flavour enhancers may also be added to the filter cartridge.

[0008] The stepped beverage filter cartridge is provided as a hermetically sealed cartridge such that the selected beverage powder contained therein remains fresh for long periods of time. The beverage powder may be nitrogen flushed and/or be provided with an oxygen barrier to promote for additional freshness. In addition, the stepped beverage filter cartridge is easy to use, and provides a single serving of beverage in a fast and economical manner.

[0009] According to an aspect of the present invention, is a stepped beverage filter cartridge system which is small and compact and still provides a high flow rate.

[0010] According to a further aspect of the invention is the provision of a stepped beverage cartridge which is simple and economical to use and can be disposed after a single use. The cartridge is preferably made as a single part and thus is economical to manufacture, however, it is possible to may the cartridge from several different parts which are adhered together by suitable means.

[0011] According to yet a further aspect of the present invention there is provided a stepped beverage cartridge which is hermetically sealed for freshness and against contamination.

[0012] It is a further aspect of the present invention to provide a stepped beverage cartridge which can be pierced at various locations (sides, top or bottom) for input and output flow with or without puncturing the filter as desired.

[0013] It is a further aspect of the present invention to provide a beverage filter cartridge which maintains its integrity and that of the filter during use. The unique vertical stepped shape of the beverage filter cartridge of the invention helps to reinforce the cartridge against external and internal pressure. Thus the cartridge can withstand increased water pressures. The cartridge may optionally further comprise a recessed support in the top or bottom end of the cartridge.

[0014] It is a further aspect of the present invention to provide a beverage filter cartridge which allows for even flow through of an aqueous medium through the beverage powder to provide a tasty and fresh beverage product.

[0015] It is yet a further aspect of the invention to provide a beverage filter cartridge into which hot pressurized water is introduced most preferably through the side of the cartridge, causing a more even flow of water over the beverage powder contained therein resulting

in a better extraction of the beverage powder.

[0016] It is yet a further aspect of the invention to provide a stepped beverage filter cartridge that is adaptable to make different sized servings of extracted beverage product.

[0017] According to a further aspect of the present invention is a stepped beverage filter cartridge system comprising a sealed stepped container, a filter element internally subdividing the container to form a brewing chamber, a beverage powder contained in the brewing chamber, liquid inlet means piercing the container to provide hot pressurized water to the brewing chamber and a liquid outlet means to allow for extracted beverage product to be removed and collected.

[0018] According to yet a further aspect of the present invention is a beverage brewing apparatus comprising a conventional housing having a stepped beverage filter cartridge system introduced therein.

Brief Description of the Drawings

[0019] A detailed description of the preferred embodiments are provided herein below with reference to the following drawings in which:

Figure 1 is an exploded perspective view of the stepped beverage filter cartridge of the present invention;

Figure 2 is a portion of a top plan view of the stepped beverage filter cartridge of Figure 1;

Figure 3 is cross sectional view of the stepped beverage filter cartridge of Figure 1;

Figure 4 is cross sectional view of a further embodiment of the stepped beverage filter cartridge having a smaller brewing chamber;

Figure 5 is a cross sectional view of the stepped beverage filter cartridge of Figure 1 showing the water inlet and beverage outlet as installed in a brewing machine;

Figure 6 is cross sectional view of yet a further embodiment of the stepped beverage filter cartridge of Figure 1;

Figure 7 is a cross sectional view of still a further embodiment of the stepped beverage filter cartridge of Figure 1;

Figure 8 is a cross sectional view of an alternative embodiment of the stepped beverage filter cartridge of Figure 7;

Figure 9 is a portion of a top plan view of the stepped beverage filter cartridge of Figure 7;

Figure 10 is a cross sectional view of the stepped beverage filter cartridge of Figure 7 showing the water inlet and beverage outlet as installed in a brewing machine;

Figure 11 is a cross sectional view of yet a further embodiment of the stepped beverage filter cartridge of Figure 1;

Figure 12 is a cross sectional view of another embodiment of the stepped beverage filter cartridge of Figure 1;

Figure 13 is a cross sectional view of a further embodiment of the stepped beverage filter cartridge of Figure 1; and

Figure 14 is a cross sectional view of yet a further embodiment of the stepped beverage filter cartridge.

[0020] In the drawings, preferred embodiments of the invention are illustrated by way of example. It is to be expressly understood that the description and drawings are only for the purpose of illustration and as an aid to understanding, and are not intended as a definition of the limits of the invention.

Detailed Description of the Preferred Embodiments

[0021] As illustrated in Figure 1, the beverage filter cartridge 10 of the present invention includes a stepped conical container 12, an impermeable base member 14, a filter element 16, a porous membrane 18 and a cake of desired beverage powder 20. The container has four vertical steps 22a, 22b, 22c, 22d of decreasing circumference. As seen in Figure 2, the steps 22a, 22b, 22c, 22d of the container are seen as concentric circles from a top plan view. The top of the container 23 which is step 22d is seen as the smallest center circle. The bottom portion of the first step 22a of the container 12 has an outward flange 24. While the base member 14 and filter element 16 are shown to be essentially straight and flat, either or both may optionally be fabricated to be convex or concave.

[0022] The container 12 and the base member 14 can be fabricated from any type of suitable plastic material such as polystyrene, polypropylene or a suitable polymeric laminate. The base member 14 is permanently bonded to the bottom of the container. Specifically, the base member 14 is bonded to the bottom of the outward flange 24. The filter element 16 is permanently bonded within the container at the top of the bottom step of the container, which is seen in Figure 1 to be at the top of step 22a. The filter element 16 is preferably made of a polypropylene or polystyrene material. The beverage powder 20 is provided directly on top of the filter element 16. The desired beverage powder 20 is provided in a premeasured amount in order to fill one or two steps of the container. Methods for manufacturing the container and filter element are well known in the art. Furthermore, the container may be recyclable and further packaged as desired.

[0023] As better seen in Figure 3, the container 12 has four vertical steps 22a, 22b, 22c and 22d. The base member 14 is bonded to the bottom of the flange 24. The filter element 16 is provided sealingly engaged or bonded within the top of the first step 22a of the container 12. A porous membrane 18 is provided sealingly engaged at the bottom portion 23 of step 22d of the con-

tainer. A plenum inlet 26 is provided on the side of step 22d of the container for the entry of hot pressurized water. A plenum outlet 27 is provided on the side of step 22a in order to allow the outflow of the extracted coffee beverage and dispense it to a cup or a container. Steps 22b and 22d together form a brewing chamber 28 which contains the beverage powder.

[0024] Figure 4 shows a container similar to that shown in Figure 3 with the exception that the porous membrane 18 is provided sealingly engaged at the bottom portion of step 22c of the container. In this manner, the brewing chamber is defined by step 22c. Such a smaller brewing chamber is designed to provide for a smaller volume of single serving beverage product than that illustrated in Figure 3.

[0025] As shown in Figure 5, the stepped beverage filter cartridge 10 is adapted for use in an automatic machine such as a coffee brewing machine where it will be positioned and gripped within a housing 30. The upper part of the housing 32 includes a penetrating water inlet 34 which penetrates the top step of the container to provide pressurized hot water through the plenum inlet 26 and to the coffee present on top of the filter 16 in the brewing chamber 28. A second penetrating water outlet 36 penetrates the bottom step of the container through the plenum outlet 27 to receive the outflow of the coffee beverage and dispense it to a cup or a container. The bottom part of the housing 38 includes a lid support 40 which supports the beverage filter cartridge 10 of the invention within the housing.

[0026] A further embodiment of the invention is seen in Figure 6, which illustrates a stepped beverage filter cartridge fabricated without a porous membrane located over the beverage powder 20. The porous membrane is not required in the cartridge of the invention and the absence of such a membrane does not affect the quality of the resultant extracted beverage product.

[0027] Yet a further alternative embodiment is seen in Figure 7. In this embodiment the container 12 has a support 40 provided therein. The support 40 is defined as a cylindrical recess extending from the top of the container through to the porous membrane 18. The support 40 provides additional support to the beverage filter cartridge structure. In Figure 7 the support is incorporated into a beverage cartridge in which the brewing chamber is defined by two vertical steps. As seen in Figure 8, the support 40 can be incorporated into a beverage cartridge in which the brewing chamber is defined by only a single vertical step of the container. Figure 9 shows that the support 40 is provided within the top of the container as a recess therein.

[0028] In Figure 10, the stepped beverage filter cartridge having a support 40 therein is shown adapted for use in an automatic machine such as a coffee brewing machine similar to that shown in Figure 5. It is understood by those skilled in the art that the support can be of any suitable shape in addition to cylindrical, so long as it helps to provide added strength to the cartridge structure under high pressure conditions.

[0029] In Figure 11, it is shown that the stepped beverage filter cartridge can be fabricated to have an additional layer of paper fiber 42 provided within the brewing chamber 28. Such a layer of paper fiber 42 may be desired for particular beverage products. Such a layer of paper fiber may be incorporated into any of the embodiments of the stepped beverage filter cartridge of the present invention.

[0030] In a further embodiment of the present invention, the stepped beverage filter cartridge of the present invention is manufactured reversing the top and bottom for particular applications. In this embodiment, shown in Figures 12 and 14, the cartridge of Figure 1 is essentially turned and used in an upside down fashion in which the steps 22 of the stepped conical container 12 decrease in size from top 23 to base 14. Again, as fabricated with the vertical steps decreasing in size from top to bottom, the water inlet 26 may be provided as shown in the side of a selected step. The inlet may also be provided in the top or bottom of this embodiment of the cartridge with the corresponding outlet suitably provided. For example, in Figure 14, the water inlet 26 is shown to perforate the cartridge through the support 40 present at the bottom of the conical container and up through the filter 16. Also, a support 40 may be provided as is also shown in phantom in Figure 12. Overall, the various configurational aspects of the stepped beverage filter device as shown in the drawings may be mixed and matched as desired without affecting the quality of the resultant beverage product and all variations are within the scope of the present invention. Thus the beverage filter cartridge as shown in Figures 12 or 14 can be manufactured with or without a permeable membrane, with or without a support, with or without a further compartment for flavouring and having the water inlet and outlet varying at different locations such as the top, side or bottom of the container. Furthermore, all embodiments can be used in a conventional brewing apparatus.

[0031] In operation, pressurized hot water is provided through the water inlet which via the plenum inlet located on the side of the top step of the container fills the top first stepped cavity of the container. The pressurized hot water (approximately 20 to 25 psi) infuses the beverage powder and essentially squeezes the beverage powder into a cake. The introduction of pressurized hot water in such a manner permeates the beverage powder as to more efficiently and more completely extract the flavour from all of the beverage powder contained therein and provide a tasty and fresh hot beverage quickly. The shape of the novel stepped container helps to maintain the contact between the pressurized hot water and the beverage powder such that more flavour is extracted from the beverage powder. Furthermore, the provision of an essentially flat filter member allows for more consistent extraction of the beverage powder contained thereon. This is in contrast to known beverage filter cartridges where water is introduced into the top of the bev-

erage powder, typically held within a conical type filter. In such known cartridges, the pressurized water does not permeate all of the beverage powder resulting in a less than desired beverage product. Should a permeable membrane be provided in the cartridge, the pressurized hot water would penetrate the membrane and then the beverage powder. The membrane may help to deflect the pressurized hot water in such a manner as to help infuse all of the beverage powder contained in the brewing chamber.

[0032] While it is preferred to introduce pressurized hot water at the side of a selected step of the cartridge, due to the unique and novel shape of the beverage filter cartridge, pressurized hot water may be introduced through the top of the first step. In the case of the top step, pressurized hot water is simply directed to approximately the middle portion of the beverage product. It is also possible to introduce pressurized hot water through the bottom step and upwards into the beverage product as is shown for example in Figure 14. In this aspect, the hot pressurized water is introduced via an inlet that penetrates the filter portion and is deflected over the beverage product in an upper chamber and the resultant beverage product is flows through the filter into the lower step chamber and through an outlet.

[0033] It is understood by one skilled in the art that specific features of the beverage filter cartridge as shown in the drawings can be modified without affecting the manner in which the beverage filter cartridge functions. For example, the steps of the stepped conical shaped container can be all made to be the same height dimension or alternatively, one or more of the steps can be fabricated to different height dimensions relative to each other. Furthermore, while the beverage filter cartridge is shown in the drawings to comprise a four stepped container, the invention functions in the same manner when manufactured to comprise more than four steps or only three steps, with the middle step having a different height dimension compared to the other steps. Furthermore, the container may be fabricated having circular vertical steps as shown herein, however, these may be fabricated in other shapes as well so long as the container itself is stepped and the internal filter and other components are suitably designed. As previously mentioned, any alternative construction of the stepped beverage filter cartridge may be constructed to contain or omit the porous membrane.

[0034] It is also understood by one skilled in the art, that the stepped beverage filter cartridge can be fabricated to contain a variety of beverage powders. While ground coffee is the most preferred beverage powder, the cartridge may also be used with tea, herbal teas, hot chocolate, soups and specialty drinks.

[0035] The stepped beverage filter cartridge may also be fabricated to contain a liquid, crystal, flakes, powder, dissolvable capsule or pill type flavour enhancer product within at least one of the vertical steps of the container which does not define the brewing chamber. Such a flavour enhancer is readily dissolvable in water as well as within the extracted beverage product. Examples of flavour enhancers may include but are not limited to vanilla, amaretto, chocolate, cinnamon, irish crème, licorice as well as mixtures thereof and the like. It is conceivable to introduce flavourings into the brewing chamber itself. As shown in Figure 13, a further separate chamber 46 may be added to contain a flavouring. In this embodiment, the dissolved beverage product would mix with the flavouring prior to being dispensed through the outlet of the container.

[0036] The stepped beverage filter cartridge system of the present invention is easy and cost effective to manufacture. It contains no moving parts. As manufactured, the cartridge is provided hermetically sealed for freshness in a suitable type of easy to open plastic packaging film. During the manufacture of the cartridge, oxygen is removed from within the sealed container to ensure the freshness of the beverage powder contained therein. The stepped beverage filter cartridge system can be used with a conventional type brewing apparatus.

[0037] In summary, the present invention provides a novel stepped beverage filter cartridge system which is simple to use and rapidly provides a single serving of tasty and fresh beverage product. The stepped beverage filter cartridge system is constructed to provide near maximal extraction of flavor from the beverage powder. It provides a consistent beverage product with minimal waste, a long shelf life and may be manufactured to contain several different types of beverages and flavourings. Furthermore, the stepped beverage filter cartridge is easy and cost efficient to manufacture and is disposable after use. It may be fabricated to use in residential or commercial type brewing machines.

[0038] Although preferred embodiments have been described herein in detail, it is understood by those skilled in the art that variations may be made thereto without departing from the scope of the invention.

Claims

1. A stepped beverage filter cartridge system comprising:

- a sealed stepped container;
- a filter element internally subdividing the container to form a brewing chamber;
- a beverage powder contained in said brewing chamber;
- a liquid inlet piercing the container to provide liquid to the brewing chamber; and
- a liquid outlet to allow for extracted beverage product to be removed.

2. The system of claim 1, wherein said stepped container comprises a conical container having a plu-

rality of vertical steps of decreasing circumference.

3. The system of claim 1, wherein said stepped container comprises a conical container having a plurality of vertical steps of increasing circumference.

4. The system of claim 1, wherein said liquid inlet is provided to pierce the container at a location selected from the group consisting of the side, the top and the bottom of the container.

5. The system of claim 1, wherein said filter element is made from a material selected from the group consisting of polypropylene and polystyrene.

6. The system of claim 1, wherein said container is made from a material selected from the group consisting of polystyrene, polypropylene and polymeric laminate material.

7. The system of claim 1, wherein a porous membrane is provided upstream of said beverage powder.

8. The system of claim 1, wherein said beverage powder is selected from the group consisting of coffee, tea, soup, hot chocolate, and specialty drinks.

9. The system of claim 1, wherein the brewing chamber additionally comprises a flavour enhancer in a form selected from the group consisting of liquid, crystal, flakes, powder, dissolvable capsule and pill.

10. The system of claim 1, wherein said system additionally comprises a layer of paper fiber within the brewing chamber.

11. The system of claim 1, wherein said system additionally comprises a separate flavour chamber downstream of the brewing chamber.

12. The system of claims 9 or 11, wherein said flavour enhancer is selected from the group consisting of vanilla, amaretto, rum, chocolate, cinnamon, irish crème, licorice and mixtures thereof.

13. The system of claim 2 or 3, wherein said stepped container comprises three steps.

14. The system of claim 2 or 3, wherein said stepped container comprises four or more steps.

15. The system of claim 1, wherein said filter element is flat, conical or convex in shape.

16. The system of claim 1, wherein said stepped container additionally comprises a support extending from either the top or bottom of the container.

17. The system of claim 16, wherein said support is a cylindrical recess extending into said stepped container.

18. The system of claim 1, wherein said liquid is provided under pressure.

19. The system of claim 18, wherein said liquid is hot water.

20. A beverage brewing apparatus comprising a conventional brewing housing; and a stepped beverage filter cartridge system of claim 1.

Figure 1

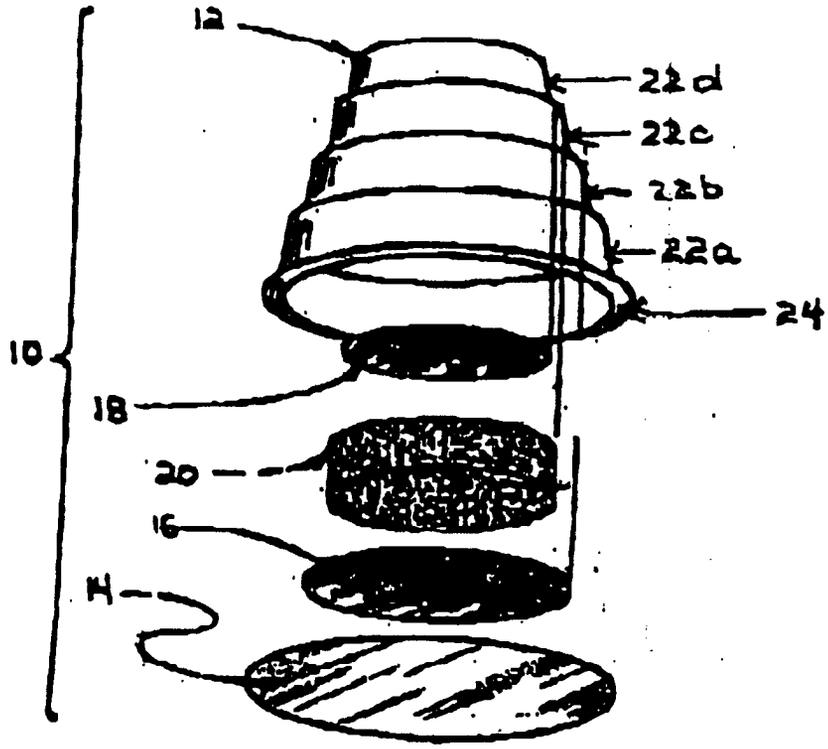

Figure 2

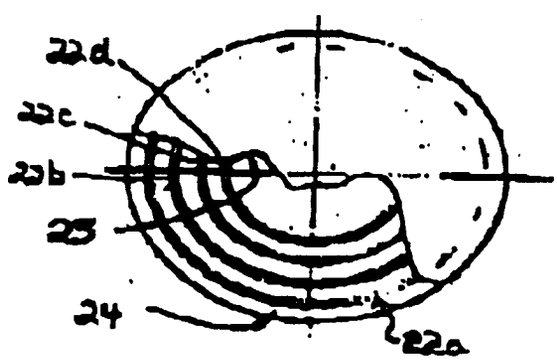

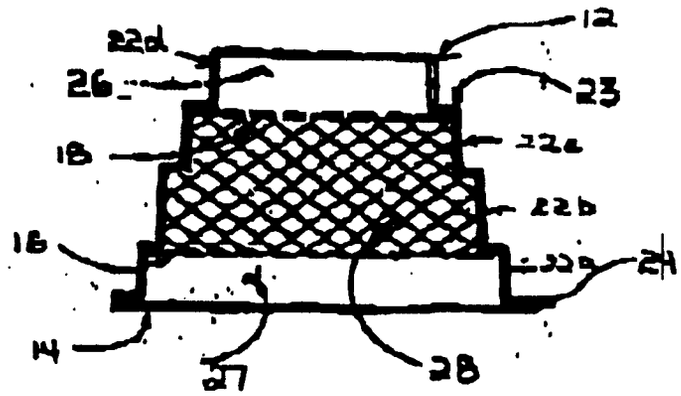

Figure 5

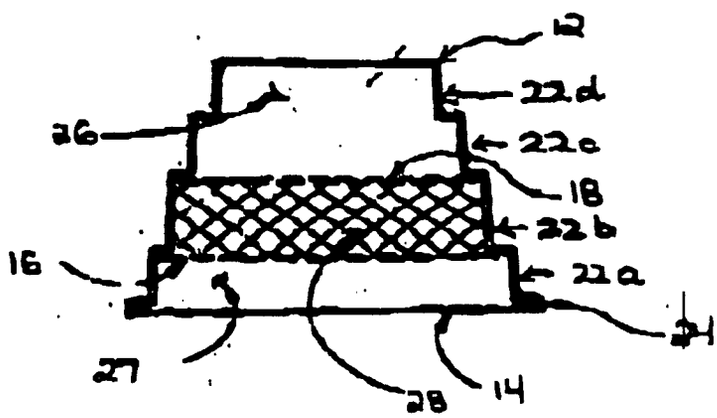

Figure 4

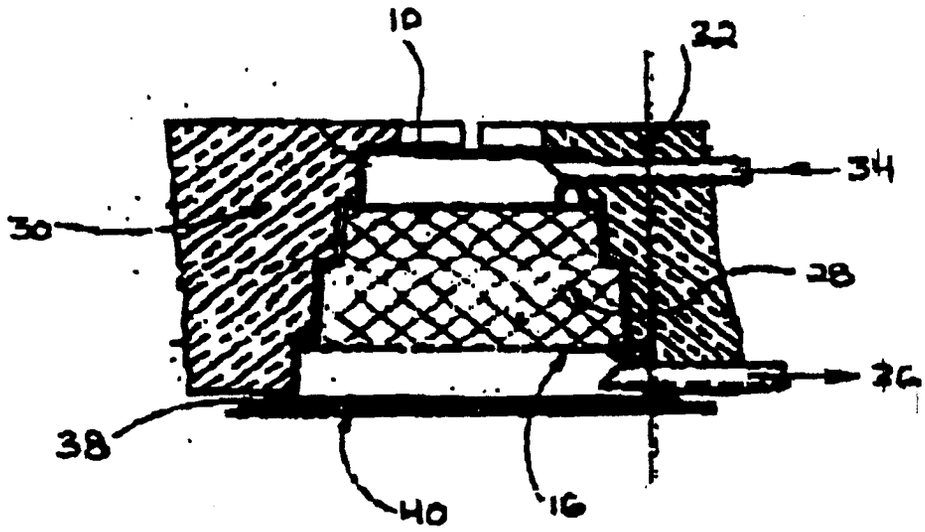

Figure 5

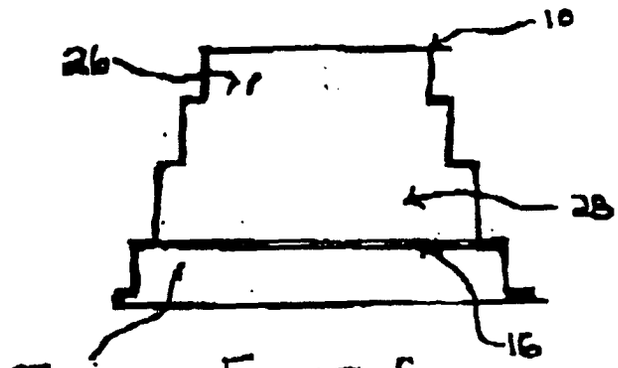

Figure 6

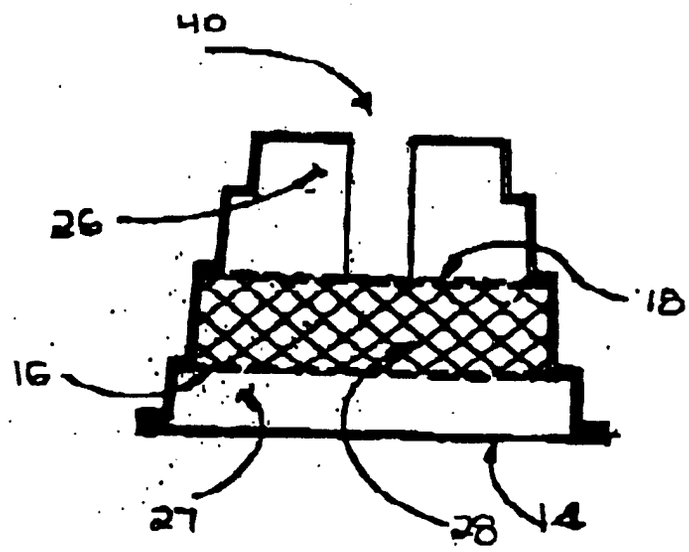

Figure 8

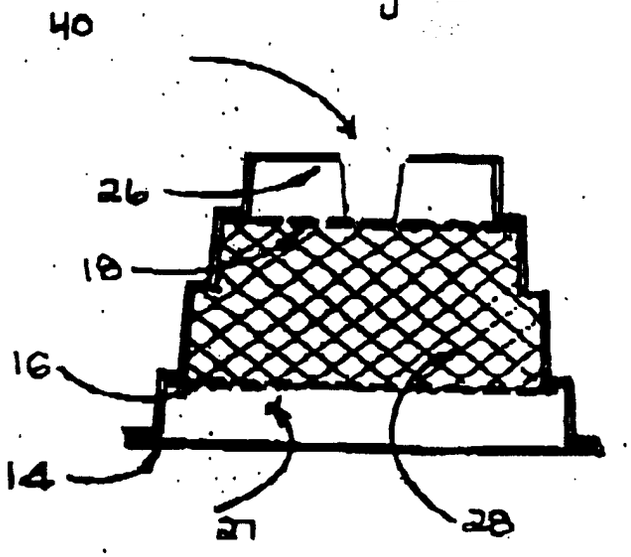

Figure 7

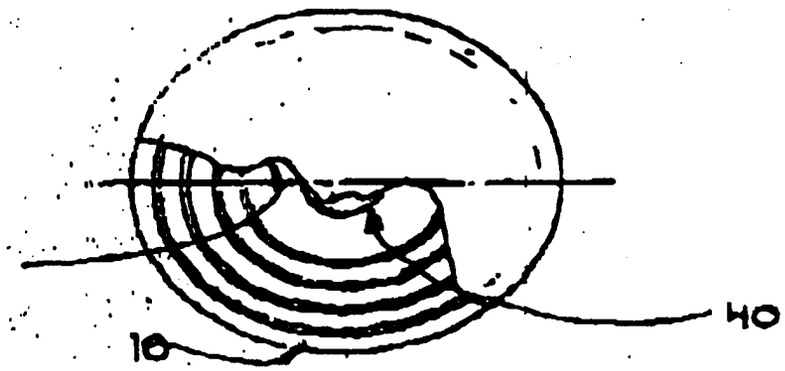

Figure 9

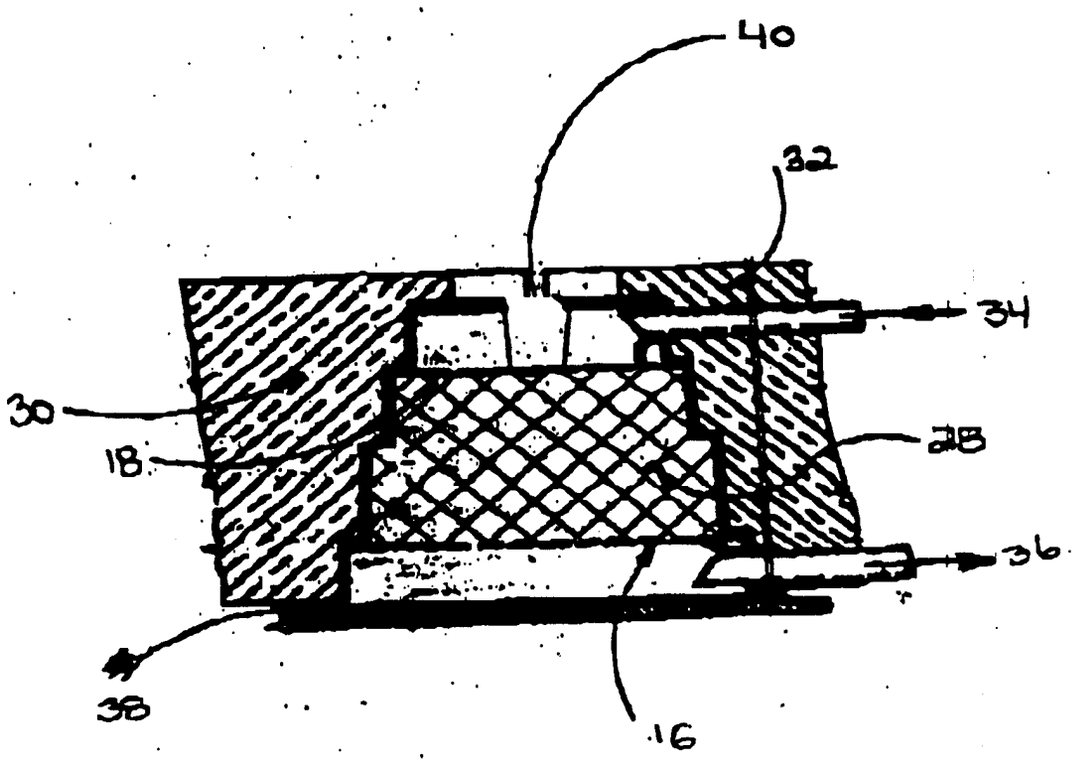

Figure 10

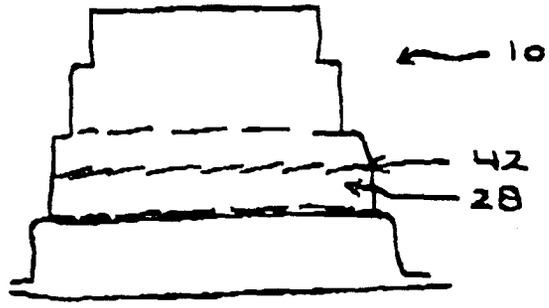

Figure 11

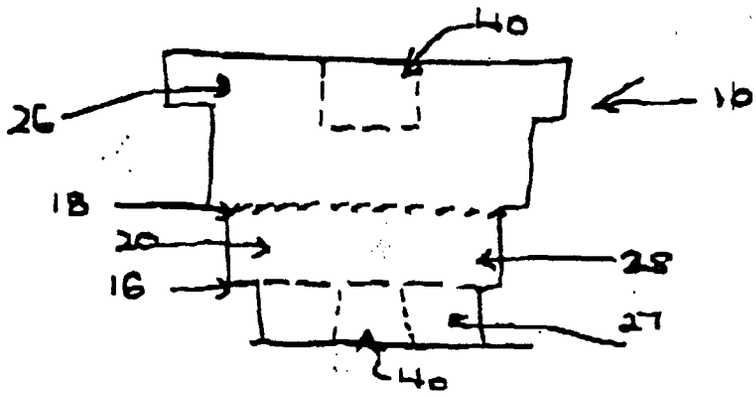

Figure 12

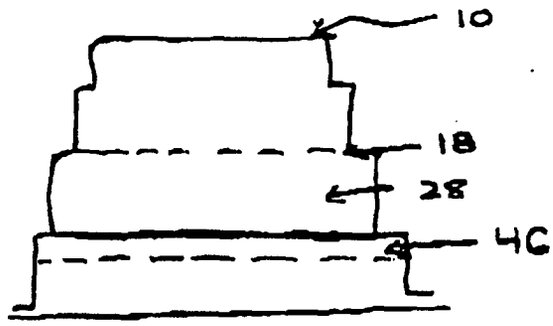

Figure 13

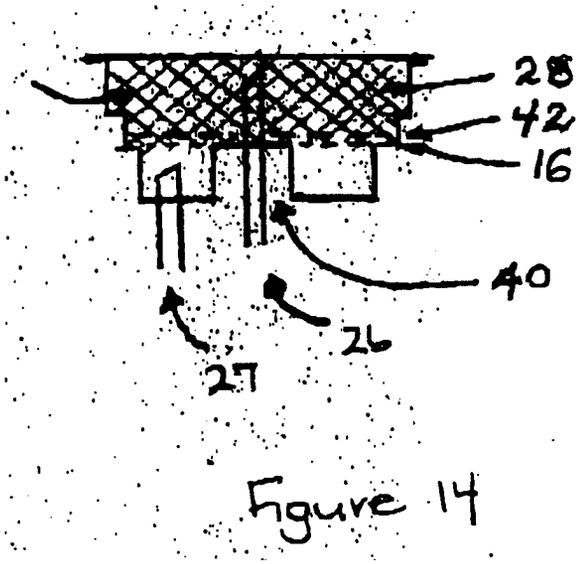

Figure 14

European Patent Office

EUROPEAN SEARCH REPORT

Application Number
EP 00 31 0131

DOCUMENTS CONSIDERED TO BE RELEVANT

Category	Citation of document with indication, where appropriate, of relevant passages	Relevant to claim	CLASSIFICATION OF THE APPLICATION (Int.Cl.7)
X	GB 1 427 375 A (MIKO NV) 10 March 1976 (1976-03-10) * page 2, line 6 - line 110; figure *	1,2,5-8, 10,13, 15,19	A47J31/06 B65D81/00
Y	---	9,11,12, 14	
Y	US 5 567 461 A (LEHRER) 22 October 1996 (1996-10-22) * column 3, line 26 - column 4, line 59; figures 1-3,14 * * column 8, line 51 - column 9, line 4 *	9,11,12	

X	FR 2 617 389 A (DESALTERA) 6 January 1989 (1989-01-06) * column 4, line 30 - column 8, line 31; figures *	1,3-8, 10,15-20	

Y	NL 8 701 627 A (DOUWE EGBERTS) 1 February 1989 (1989-02-01) * figures 5-7 *	14	

A	US 4 975 292 A (LOIZZI) 4 December 1990 (1990-12-04) * column 2, line 17 - column 4, line 3; figures 1,3 *	9,11,12	

TECHNICAL FIELDS SEARCHED (Int.Cl.7)

A47J
B65D

The present search report has been drawn up for all claims

Place of search	Date of completion of the search	Examiner
THE HAGUE	14 February 2001	Bodart, P

CATEGORY OF CITED DOCUMENTS

X : particularly relevant if taken alone
Y : particularly relevant if combined with another document of the same category
A : technological background
O : non-written disclosure
P : intermediate document

T : theory or principle underlying the invention
E : earlier patent document, but published on, or after the filing date
D : document cited in the application
L : document cited for other reasons

& : member of the same patent family, corresponding document

EPO FORM 1503 03.82 (P04C01)

ANNEX TO THE EUROPEAN SEARCH REPORT ON EUROPEAN PATENT APPLICATION NO. EP 00 31 0131

This annex lists the patent family members relating to the patent documents cited in the above-mentioned European search report.
The members are as contained in the European Patent Office EDP file on
The European Patent Office is in no way liable for these particulars which are merely given for the purpose of information.

14-02-2001

Patent document cited in search report	Publication date	Patent family member(s)	Publication date
GB 1427375 A	10-03-1976	BE 790706 A	15-02-1973
		FR 2205045 A	24-05-1974
US 5567461 A	22-10-1996	US RE36516 E	18-01-2000
FR 2617389 A	06-01-1989	NONE	
NL 8701627 A	01-02-1989	NONE	
US 4975292 A	04-12-1990	DE 4028492 A	12-03-1992
		US 5043172 A	27-08-1991

EPO FORM P0459

For more details about this annex : see Official Journal of the European Patent Office, No. 12/82