(19) Europäisches Patentamt
European Patent Office
Office européen des brevets

(11) EP 0 777 086 B1

(12) **EUROPEAN PATENT SPECIFICATION**

(45) Date of publication and mention of the grant of the patent:
17.10.2001 Bulletin 2001/42

(51) Int Cl.[7]: **F24D 19/02**

(21) Application number: **96308601.2**

(22) Date of filing: **28.11.1996**

(54) **Mounting assembly**

Montageeinrichtung

Ensemble de montage

(84) Designated Contracting States:
BE DE ES FR GB IT NL SE

(30) Priority: **01.12.1995 GB 9524656**

(43) Date of publication of application:
04.06.1997 Bulletin 1997/23

(73) Proprietor: **Keeling, Malcolm**
Stoke-on-Trent, Staffordshire ST10 1PF (GB)

(72) Inventor: **Keeling, Malcolm**
Stoke-on-Trent, Staffordshire ST10 1PF (GB)

(74) Representative: **Sales, Robert Reginald**
Swindell & Pearson,
48 Friar Gate
Derby DE1 1GY (GB)

(56) References cited:
DE-A- 2 446 450
GB-A- 2 150 685
GB-A- 2 202 040

Note: Within nine months from the publication of the mention of the grant of the European patent, any person may give notice to the European Patent Office of opposition to the European patent granted. Notice of opposition shall be filed in a written reasoned statement. It shall not be deemed to have been filed until the opposition fee has been paid. (Art. 99(1) European Patent Convention).

EP 0 777 086 B1

Printed by Jouve, 75001 PARIS (FR)

Description

[0001] This invention concerns a mounting assembly and particularly but not exclusively an assembly for mounting a central heating radiator or similar item on a wall.

[0002] With conventional wall mounted central heating radiators and similar items, it is generally not possible to fully decorate therebehind. Accordingly, during decoration the radiator or other item has to be taken off the wall. This usually comprises disconnecting the radiator and draining it, and lifting it off its mounting brackets. This is a relatively time consuming job. Furthermore, it is quite common for air locks to be introduced into the central heating system and/or other problems to occur following refitting of the radiator.

[0003] GB-A-2202040 and GB-A-2150685 describe assemblies for mounting central heating radiators on walls. Both assemblies having mounting arrangements selectively engageable with the rear of a radiator, thereby permitting pivoting of the radiator to selectively enable access to the wall therebehind.

[0004] According to the present invention there is provided a mounting assembly for mounting a central heating radiator on a wall, the assembly comprising first mounting means for detachably mounting an upper part of the item on a wall, and second mounting means for mounting a lower part of the item on a wall, the second mounting means being arranged such that the first mounting means is selectively engageable with the item, and when said upper part is detached from a wall the item can be pivoted about the second mounting means whereby to permit access to the wall previously behind the item, characterised in that the first mounting means comprises a bracket arrangement including a first member mountable on a wall and a second member engageable with the item, the first and second members being selectively engageable together, the second member comprising a formation engageable with the top or side of a central heating radiator, the second mounting means comprising a pair of spaced wall engaging brackets, shaped to support the radiator beneath inlet and outlet pipes thereof and to also permit the item to pivot thereover, the brackets including a recess in which the respective pipe can be cradled.

[0005] The first mounting means preferably comprises a plurality of bracket arrangements.

[0006] The or each bracket arrangement preferably comprises means selectively engageable between the first and second members. The first mounting means may be arranged such that the engageable means may be accessed from the side and/or above the item.

[0007] Embodiments of the present invention will now be described by way of example only with reference to the accompanying drawings, in which:-

Fig. 1 is a perspective view of a central heating radiator mounted to a wall by an assembly according to the present invention;

Fig. 2 is a similar view to Fig. 1 but with the radiator pivoted away from the wall;

Fig. 3 is a diagrammatic perspective view of part of the assembly of Fig. 1;

Fig. 4 is a diagrammatic perspective view of a further part of the assembly of Fig. 1;

Figs. 5 and 6 are diagrammatic side views respectively of the assembly of Fig. 1 and a further assembly; and

Fig. 7 is a similar view to Fig. 4, of the further assembly of Fig. 6.

[0008] Figs. 1-5 show a mounting assembly 10 for mounting a conventional single radiator 12 onto a wall 14. The assembly 10 comprises a pair of spaced bracket arrangements 16. Each arrangement 16 comprises an L-shaped bracket 18 mounted to the wall 14 by a hole 20 in its base 22. A hole 24 is also provided through the side limb of the L, and a threaded collar 26 is provided on the inner side thereof.

[0009] Each arrangement 16 also comprises a further bracket 28 in the form of a strip of material with a slot 30 towards one end thereof. The other end has a narrow U-shaped formation 32 in which the side edge of the radiator 12 is engageable. The brackets 18,28 can be interconnected by respective bolts 34 engageable through the holes 24 and slots 30.

[0010] The assembly 10 also comprises a pair of lower brackets 36. Each of the brackets 36 comprises a plate 38 mountable on the wall from which extends a strip 40. Towards the free end of the strip 40 an upwardly facing recess 42 is provided with a substantially semicircular dosed end. The brackets 36 are mounted on the wall 14 so as to cradle and support respectively the inlet and outlet pipes 44,46 of the radiator 12.

[0011] In use, with the brackets 18 and 36 mounted on the wall 14 in required positions, the radiator 12 can be mounted such that the inlet and outlet pipes 44,46 rest in the respective recesses 42 and the brackets 28 engage with the brackets 18 and are held together by the bolts 34.

[0012] Fig. 3 illustrates the arrangement 16 being used in a slightly different manner as indicated by A. In this instance the brackets 18,28 are arranged such that the formation 32 is engageable with the top edge of the radiator 12. Whether the arrangements 16 are positioned to engage with the top and/or side edge of a radiator depends on particular conditions such as for instance whether the side edge of the radiator is against the wall and/or a shelf is provided above the radiator.

[0013] If access is required to the wall 14 behind the radiator 12, the inlet and outlet pipes 44,46 can be loos-

ened a small degree by turning the lock nut 45 (see Fig. 4). The brackets 18,28 can then be disengaged and the radiator pivoted downwardly to the position shown in Fig. 2. Receptacles such as dishes can be provided below the pipes 44 and 46 in case any leakage occurs, though in practice any leakage has been found to be quite slight. With the radiator in the position shown in Fig. 2, unfettered access is provided to the wall 14 to permit decorating or any other activity to be carried out. The radiator 12 can be returned to the upright position as shown in Fig. 1 by reversing the above steps.

[0014] Figs. 6 and 7 show a similar assembly 48 with lower brackets 50 and upper bracket arrangements 52. The assembly 48 mounts a double radiator 54. The lower brackets 50 are similar to the brackets 36 except that the strips are longer to accommodate the extra width of radiator. The arrangements 52 have identical brackets 18 but the further brackets 56 are longer, and rather than a U-shaped formation, comprise two projecting strips 60 engageable respectively against the inside side of the inner side edge, and the outer side of the outer side edge of the radiator 54. It is to be realised that the respective brackets can be provided in any required size or shape to accommodate different sizes and shapes of radiators.

[0015] There is thus described a range of mounting assemblies which can be used to mount a wide range of central heating radiators or other items onto a wall with advantageous features. The assemblies permit the radiator to be readily moved away from the wall without disconnection. This movement can be carried out in a few minutes by an unskilled person. The arrangements are very flexible for use with different radiators and in difficult positions such as under shelves and/or in corners of the room. The assemblies are of relatively simple construction and can thus be inexpensively and robustly manufactured. The assemblies can be used on existing radiators without the requirement for any alteration of the radiator.

[0016] Various other modifications may be made. For instance the upper wall mounting brackets may be differently shaped. Slots could be provided in either or both of the upper brackets to accommodate different wall to radiator spacings.

Claims

1. A mounting assembly (10,48) for mounting a central heating radiator (12,54) on a wall, the assembly (10,48) comprising first mounting means (16,56) for detachably mounting an upper part of the item on a wall, and second mounting means (36,50) for mounting a lower part of the item on a wall, the second mounting means (36,50) being arranged such that the first mounting means (16,56) is selectively engageable with the item, and when said upper part is detached from a wall the item can be pivotted about the second mounting means (36,50) whereby to permit access to the wall previously behind the item, **characterised in that** the first mounting means (16,56) comprises a bracket arrangement including a first member (18) mountable on a wall and a second member (28,58) engageable with the item, the first and second members (18,28,58) being selectively engageable together, the second member (28,58) comprising a formation (32,60) engageable with the top or side of a central heating radiator (12,54), the second mounting means (36,50) comprising a pair of spaced wall engaging brackets (36,50), shaped to support the radiator beneath inlet and outlet pipes (44,46) thereof and to also permit the item to pivot thereover, the brackets (36,50) including a recess (42) in which the respective pipe (44,46) can be cradled.

2. An assembly according to claim 1, **characterised in that** the first mounting means (16,56) comprises a plurality of bracket arrangements.

3. An assembly according to claims 1 or 2, **characterised in that** the or each bracket arrangement (16,56) comprises means (34) selectively engageable between the first and second members (18,28,58).

4. An assembly according to claim 3, **characterised in that** the first mounting means (16,56) is arranged such that the engageable means (34) may be accessed from the side and/or above the radiator.

Patentansprüche

1. Montageanordnung (10, 48) zum Montieren eines Zentralheizungsradiators (12, 54) an einer Wand, wobei die Anordnung (10, 48) aufweist: ein erstes Montiermittel (16, 56) zum abnehmbaren Montieren eines oberen Teils des Gegenstands an einer Wand; und ein zweites Montiermittel (36, 50) zum Montieren eines unteren Teils des Gegenstands an einer Wand, wobei das zweite Montiermittel (36, 50) derart angeordnet ist, dass das erste Montiermittel (16, 56) mit dem Gegenstand selektiv in Eingriff gebracht werden kann, und wenn der obere Teil von einer Wand abgenommen wird, der Gegenstand um das zweite Montiermittel (36, 50) geschwenkt werden kann, wodurch der Zugang zu der Wand ermöglicht wird, die zuvor hinter dem Gegenstand war, **dadurch gekennzeichnet, dass** das erste Montiermittel (16, 56) eine Klammeranordnung aufweist mit einem an einer Wand montierbaren ersten Glied (18) und einem mit dem Gegenstand in Eingriff bringbaren zweiten Glied (28, 58), wobei das erste und das zweite Glied (18, 28, 58) selektiv miteinander in Eingriff bringbar sind und wobei das zweite Glied (28, 58) eine Formation (32, 60) auf-

weist, die mit dem Oberteil oder dem Seitenteil eines Zentralheizungsradiators (12, 54) in Eingriff bringbar ist, und wobei das zweite Montiermittel (36, 50) ein Paar beabstandeter Wandeingriffsklammern (36, 50) aufweist, die so geformt sind, dass sie den Radiator unterhalb von dessen Einlass- und Auslassrohren (44, 46) tragen und auch ein Schwenken des Gegenstands darüber gestatten, wobei die Klammern (36, 50) eine Vertiefung (42) enthalten, in der das entsprechende Rohr (44, 46) aufgenommen werden kann.

2. Montageanordnung nach Anspruch 1, **dadurch gekennzeichnet, dass** das erste Montiermittel (16, 56) eine Vielzahl von Klammeranordnungen aufweist.

3. Montageanordnung nach Anspruch 1 oder 2, **dadurch gekennzeichnet, dass** die oder jede Klammeranordnung (16, 56) ein Mittel (34) aufweist, das zwischen dem ersten und dem zweiten Glied (18, 28, 58) selektiv in Eingriff bringbar ist.

4. Montageanordnung nach Anspruch 3, **dadurch gekennzeichnet, dass** das erste Montiermittel (16, 56) derart angeordnet ist, dass das in Eingriff bringbare Mittel (34) von der Seite und/oder oberhalb des Radiators zugänglich ist.

Revendications

1. Ensemble de montage (10, 48) destiné à monter un radiateur de chauffage central (12, 54) sur une paroi, l'ensemble (10, 48) comprenant des premiers moyens de montage (16, 56) pour monter de manière amovible une partie supérieure de l'article sur une paroi, et des seconds moyens de montage (36, 50) pour monter une partie inférieure de l'article sur une paroi, les seconds moyens de montage (36, 50) étant disposés de telle sorte que les premiers moyens de montage (16, 56) puissent venir en prise de manière sélective avec l'article, et que lorsque ladite partie supérieure est détachée d'une paroi, l'article puisse être tourné autour des seconds moyens de montage (36, 50) de telle manière qu'il permette l'accès à la paroi située précédemment derrière l'article, **caractérisé en ce que** les premiers moyens de montage (16, 56) comprennent une disposition de support comprenant un premier élément (18) pouvant être monté sur une paroi et un second élément (28, 58) pouvant venir en prise avec l'article, les premier et second éléments (18, 28, 58) pouvant venir en prise les uns avec les autres de manière sélective, le second élément (28, 58) comprenant une formation (32, 60) susceptible de venir en prise avec la partie supérieure ou latérale du radiateur de chauffage central (12, 54), les seconds moyens de montage (36, 50) comprenant une paire de supports espacés de mise en prise de paroi (36, 50), façonnés de manière à supporter le canalisations en dessous des canalisations d'entrée et de sortie (44, 46) de ce dernier et également pour permettre à l'article de pivoter dessus, les supports (36, 50) comprenant un creux (42) pouvant servir de berceau à la canalisation respective (44, 46).

2. Ensemble selon la revendication 1, **caractérisé en ce que** les premiers moyens de montage (16, 56) comprennent une pluralité de dispositions de support.

3. Ensemble selon la revendication 1 ou 2, **caractérisé en ce que** la ou chaque disposition de support (16, 56) comprend des moyens (34) susceptibles de venir en prise de manière sélective entre les premier et second éléments (18, 28, 58).

4. Ensemble selon la revendication 3, **caractérisé en ce que** les premiers moyens de montage (16, 56) sont disposés de telle sorte que les moyens susceptibles de venir en prise (34) puissent être accessibles à partir du côté et/ou du dessus du radiateur.

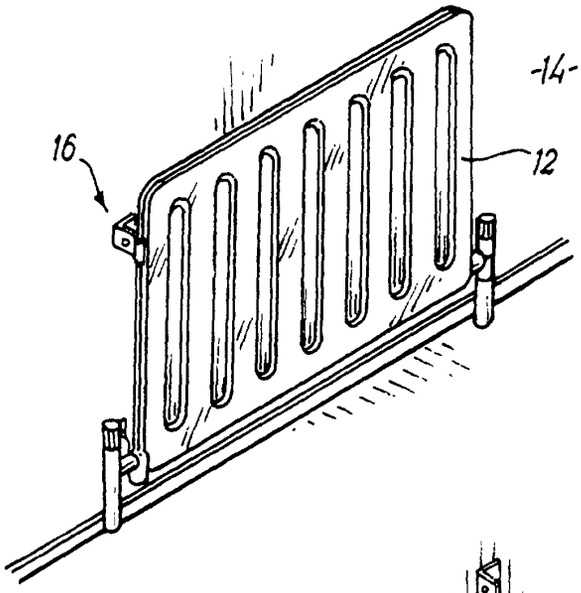

FIG.1

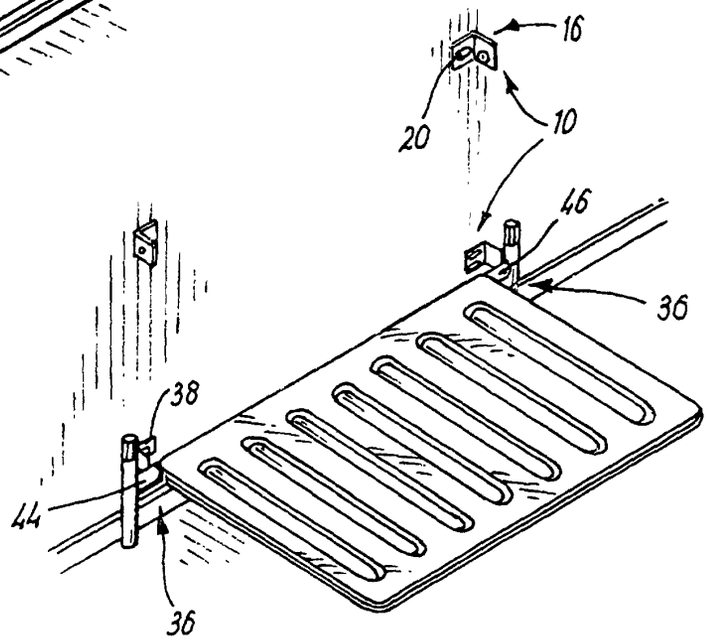

FIG.2

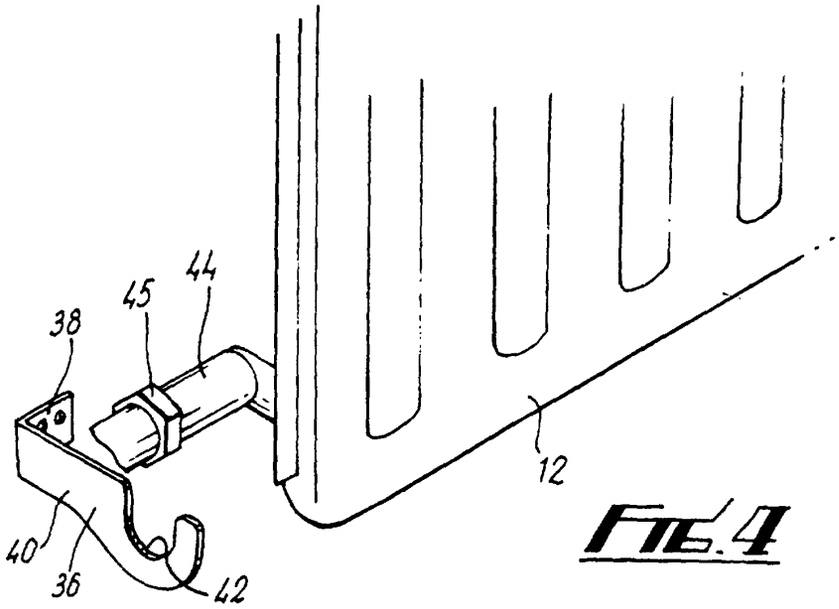

FIG.4

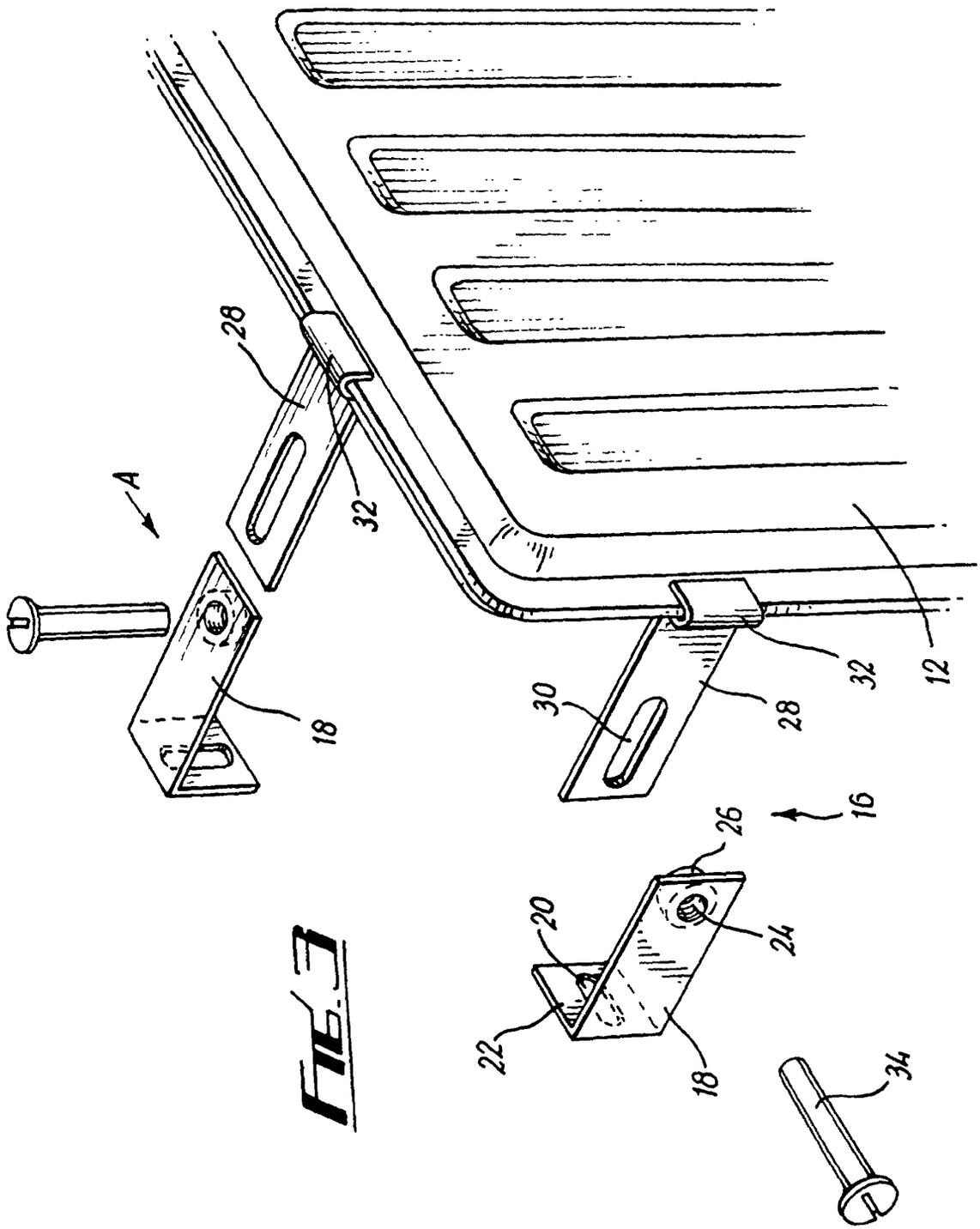

FIG. 3

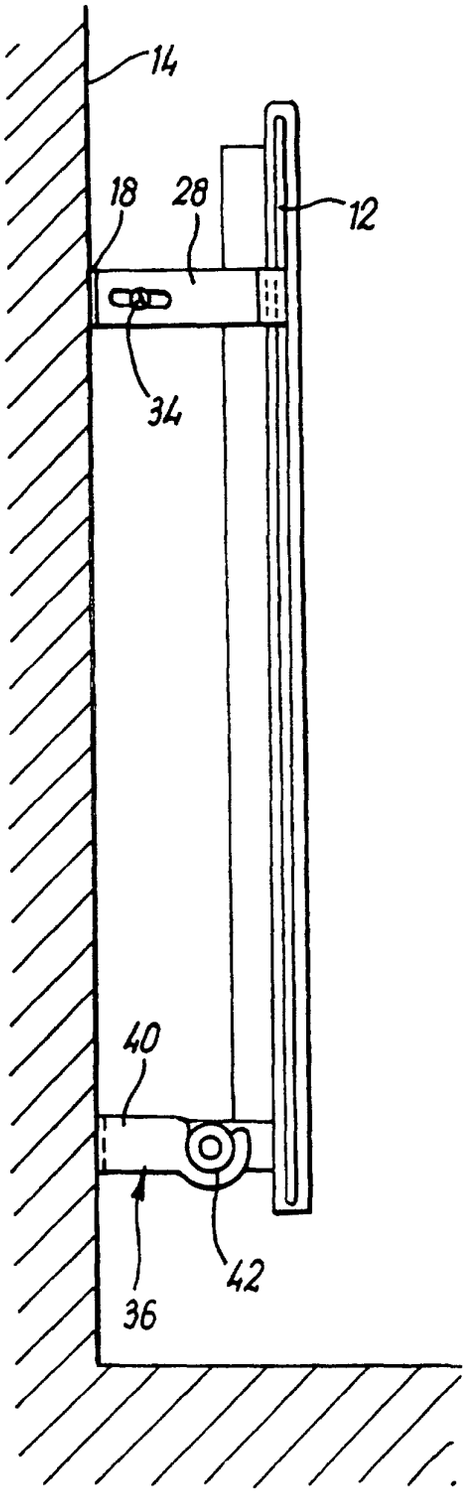

FIG. 5

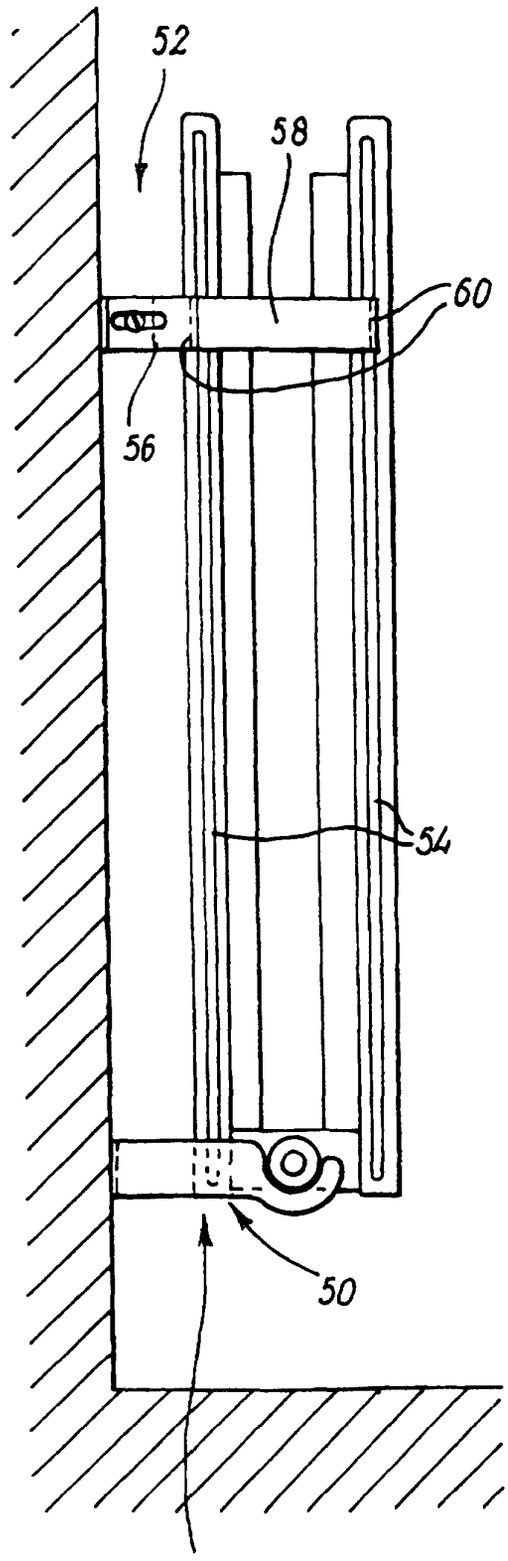

FIG. 6

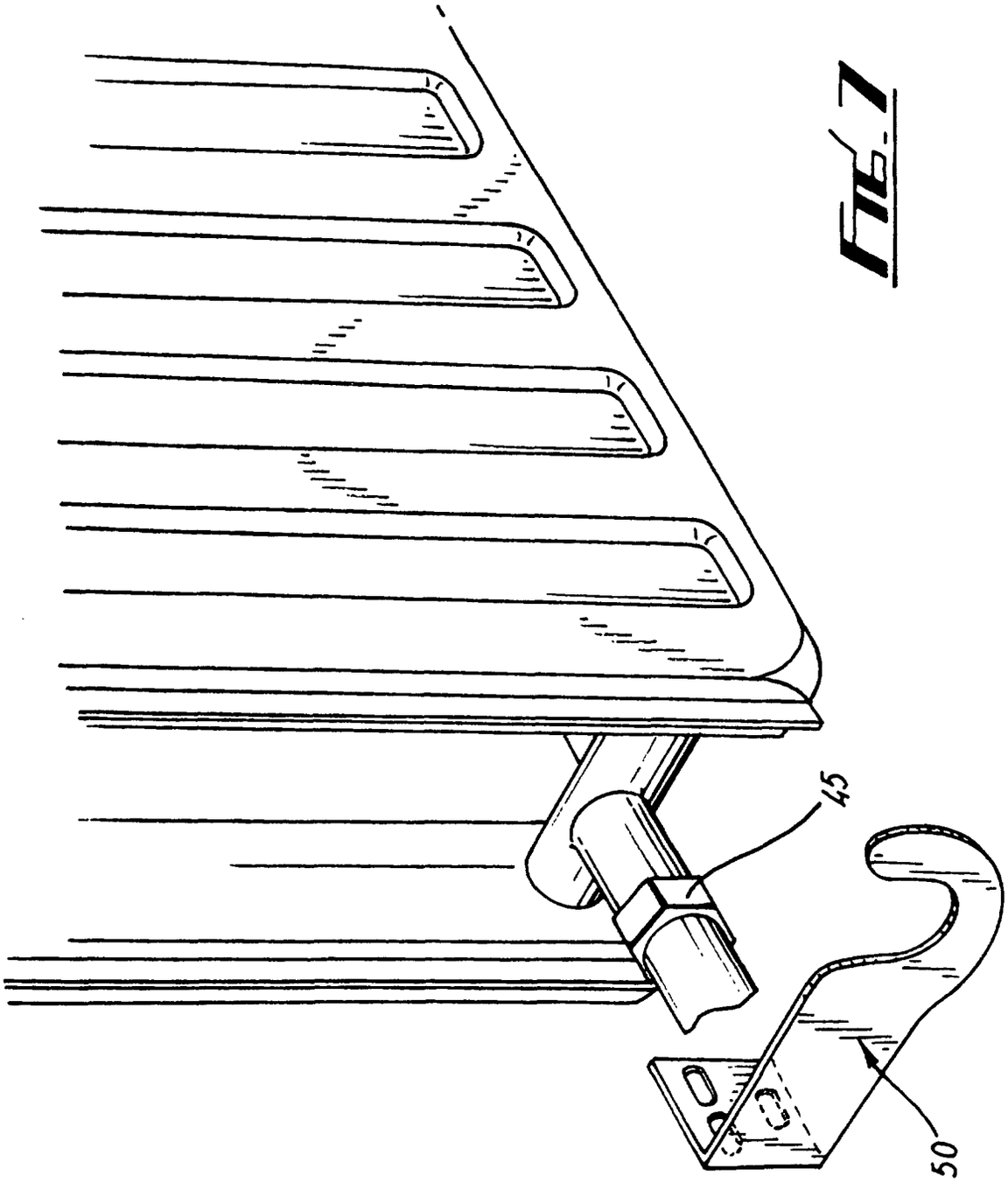

FIG. 7