(19) Europäisches Patentamt
European Patent Office
Office européen des brevets

(11) EP 0 695 383 B1

(12) **EUROPEAN PATENT SPECIFICATION**

(45) Date of publication and mention of the grant of the patent:
31.10.2001 Bulletin 2001/44

(21) Application number: **93910564.9**

(22) Date of filing: **26.03.1993**

(51) Int Cl.[7]: **D06C 3/00**, B01D 24/00, B01D 27/02, D04H 1/04, B01D 39/08, D04H 13/00

(86) International application number:
PCT/US93/03090

(87) International publication number:
WO 94/23109 (13.10.1994 Gazette 1994/23)

(54) **POST-TREATMENT OF NONWOVEN WEBS**

NACHBEHANDLUNG VON VLIESSTOFFE.

POST-TRAITEMENT D'UNE BANDE DE NON-TISSE

(84) Designated Contracting States:
BE DE DK FR GB IT NL SE

(43) Date of publication of application:
07.02.1996 Bulletin 1996/06

(73) Proprietor: **THE UNIVERSITY OF TENNESSEE RESEARCH CORPORATION**
Knoxville, Tennessee 37966-0344 (US)

(72) Inventors:
- **HASSENBOEHLER, Charles, B., Jr.**
  Knoxville, TN 37996-4900 (US)
- **WADSWORTH, Larry, C.**
  Knoxville, TN 37922 (US)

(74) Representative:
Weiss, Wolfgang, Dipl.-Chem. Dr. et al
Weickmann & Weickmann
Patentanwälte
Kopernikusstrasse 9
81679 München (DE)

(56) References cited:
US-A- 4 025 679
US-A- 4 048 364
US-A- 4 088 731
US-A- 4 295 251
US-A- 4 340 479
US-A- 4 536 439
US-A- 4 877 433
US-A- 4 965 122
US-A- 5 053 066
US-A- 5 169 712
US-A- 5 180 630

Note: Within nine months from the publication of the mention of the grant of the European patent, any person may give notice to the European Patent Office of opposition to the European patent granted. Notice of opposition shall be filed in a written reasoned statement. It shall not be deemed to have been filed until the opposition fee has been paid. (Art. 99(1) European Patent Convention).

EP 0 695 383 B1

Printed by Jouve, 75001 PARIS (FR)

Description

SPECIFICATION

FIELD OF THE INVENTION

[0001] The invention refers to a method for lateral consolidation of and reducinq pore size of a web.

BACKGROUND OF THE INVENTION

[0002] Meltblowing is a process for manufacturing nonwoven products by extruding molten thermoplastic resins through fine capillary holes (orifices) and blowing hot air on each side of the extruded filaments to attenuate and draw down the filaments. The filaments are collected on a screen or other suitable collection device as a random entangled nonwoven web. The web may be withdrawn and further processed into consumer goods such as mats, fabrics, webbing, filters, battery separators, and the like. Also, the consumer goods may be produced in line with the meltblowing line.

[0003] As indicated above, the present invention relates to the post-treatment of nonwoven webs to alter the filament spacing and structure of the webs. It should be observed that the terms "filaments" or "fibers" are used interchangeably herein, although "fibers" in nonwovens generally refers to discontinuous strands and "filaments" as continuous strands. The present invention contemplate webs with continuous filaments and/or discontinuous fibers.

[0004] Since the development of the meltblowing process by the Naval Research Laboratory in 1951 (published in 1954 by the U.S. Department of Commerce in an article entitled MANUFACTURE OF SUPERFINE ORGANIC FIBERS"), there has been a considerable effort by several companies operating in the industry to find new uses for the nonwoven product having microsized fibers. Because of the random, geometric assembly or structure of the fibers, and relatively small fiber size, the fibers have received extensive use as filters.

[0005] In the formation process for most random laid or unordered fibrous webs, the pore size that develops is inversely related to the square of the fiber diameter. The spunbonded process is distinguished from meltblowing by self-bonding and non uniform draw down (plastic deformation) of filaments forming the web. Thus meltblown webs have a relatively broad distribution of fiber diameters. Typical nonwoven webs produced by meltblowing have fiber diameters of 0.5 to 20 microns, preferably 0.5 to 8 microns, making them suitable for filtering out 5 micron particles at 80 percent efficiency or greater. It is known that filtration can be improved by practicing the web formation process to produce smaller and smaller diameter fibers while controlling other formation parameters such as porosity and thickness. As noted above, this results in smaller pore size thereby improving the efficiency of particle removal in filtration. By operating the meltblowing process under extreme conditions, the fiber size can be produced in the order of 0.1 to 5 microns. The process, however, has the following disadvantages: low production rates, high energy usage. In order to improve the properties of the nonwoven web, efforts have been made to post-treat the webs by a variety of processes. Such efforts have included post calendering the web to improve, the tensile strength of the web, post electrification as disclosed in U.S. Patent 4,592,815 to improve filtration performance of the web, to name but two of such efforts. It is significant to note that none of these prior art techniques have been directed specifically at planar consolidation to reduce the size of the pores in the web.

[0006] Calendering of nonwovens flattens fibers and consolidates the web in a direction normal to the plane of the web and reduces the thickness. This, however, leads to reduction in permeability which is an important property to conserve for many filtration purposes. U.S. Patent 4,048,364 discloses a process for drawing the meltblown web in the machine direction (MD) to produce a ten-fold increase in the tensile strength of the post-drawn web. It is significant to note, however, that the precursor web required in this invention contains relatively course fibers (10 to about 40 microns average fiber diameter) and polymer of low crystallinity. Low crystallinity generally means about 22% or less. The extensive drawing of the web reduces the diameter of the fibers in the machine direction to an average diameter of 1 to 8 microns at draw ratios ranging from 2:1 to 10:1 and preferably 5:1 to 7:1. The main purpose of the process is to increase the molecular orientation to enhance the strength of the greatly drawn fibers. Precursor webs of very high post processing draw ratio capability are required in order to prevent rupture of fibers in the web drawing process.

[0007] U.S. 4,048,364 discloses a nonwoven web made from a precursor nonwoven web, said precursor web comprising randomly collected nonelastomeric fibers having and being uniaxially drawn and heat set, wherein the uniaxial heating and drawing are carried out continuously by passing the precursor web into an oven at a first linear velocity and withdrawing the precursor web from the oven at a second linear velocity and wherein the ratio of the second velocity to the first velocity includes the ranges from about 1.1:1 to 2:1, whereby a majority of the fibers are consolidated and aligned generally in the direction of draw and a minority of segments of fibers are disposed crosswise or transversely to the direction of draw and a method for forming such a web. US 5,053,066 shows the use of a meltblown web for subjecting it to drawing under heat and to form randomly bundled pleats for a cigarette filter. US 4,965,122 shows a reversably necked multilayer web material which has been necked by drawing at ambient temperature before being

transported by heated rollers.

SUMMARY OF THE INVENTION

[0008] The invention provides a method for lateral consolidation of and reducing pore size of a web according to claim 1 and a nonwoven web made from a precursor nonwoven web according to claim 15. By selecting a nonwoven web with certain properties and post-drawing the web under certain conditions, the fibers making up the web are restructured to provide the web with reduced pore sizes, and a narrower pore size distribution. Such post-treated webs have unique measures of pore size, directional absorption and elastic recovery properties which make them ideally suited for a variety of end use applications such as filters, vacuum cleaner bags, protective apparel, face masks, diapers or sanitary napkin parts, wound dressings, respirators, wipes, chemical reservoirs, wicks, and surgical drapes.

[0009] The method of the present invention involves subjecting a bonded thermoplastic nonwoven web having a relatively low tensile extensibility during post processing (as reflected by a low draw ratio at break) to primary drawing under an elevated temperature. This uni-directional drawing in the MD laterally consolidates the web to a great extent thereby reducing both the average pore size of the web and narrowing the pore size distribution. The resultant web exhibits improved uniformity in pore size and high lateral elasticity characteristic of "stretch fabric" having approximately 120% elongation to break.

[0010] The nonwoven webs are firstly drawn under thermal conditions and secondly mechanically compacted to efficiently alter the geometric arrangement of the fibers making up the web resulting in web having reduced measures of pore size.

[0011] In an alternate embodiment, the web being drawn may be passed into supplemental mechanical compacting means to induce and/or refine the primary web consolidation.

[0012] Although the present invention is described and exemplified in connection with meltblown and spunbond webs, it is to be understood that it has application with other nonwovens such as hydro-entangled, needled webs, and laminated combinations of these and with other web forms such as air laid, etc.

BRIEF DESCRIPTION OF THE DRAWINGS

[0013]

Figure 1 is a perspective view of apparatus for producing meltblown webs.

Figure 2 is a perspective view of apparatus for the practice of the present invention.

Figure 3 is a perspective view of an alternate embodiment of an apparatus for the practice of the invention illustrating the drawn web passing over a torus surface for variably imparting compaction forces to the consolidating web.

Figure 4 is an enlarged plan view of a tiny planar segment of a meltblown web illustrating the random nature of a precursor web useable in the present invention.

Figure 5 is an idealized plan view representation of the fibers of a precursor web facilitating the analysis of the mechanisms involved in the present invention.

Figure 6 is a view similar to Figure 5 after the web had been drawn.

Figure 7 presents two curves illustrating the pore size distribution of a web before and after drawing.

Figure 8 is a plot illustrating that precursor meltblown webs (circles) having average fiber diameter less than eight microns (sample data from Table I and II) are increasingly densified by the post-drawing (squares).

Figure 9 is a plot illustrating that precursor meltblown webs (circles) having fiber diameter greater than about eight microns show negligible improvement in particle filtration efficiency after post drawing (squares).

DESCRIPTION OF THE PREFERRED EMBODIMENTS

[0014] As indicated above, the present invention relates to the post-treatment of a precursor nonwoven web to re-constitute or restructure the fibers of the web and reduce the measures of pore size. The term "nonwoven" as used herein means randomly laid fibers or filaments to form a web wherein some of the fibers are bonded by fiber-to-fiber fusion or fiber entanglement, or thermal bonds as by point bonding. The term "pore size" means a quantification of the physical dimensions of channels oriented in a generally normal direction to the plane of the web. The pore size values recited herein are based on standard test method ASTM F 316-86. Embodiments and values not falling into the scope of the claims are comparative.

[0015] The present invention described with specific reference to the preferred webs will be meltblown webs; it is to be emphasized, however, that the method and product produced thereby includes other nonwoven webs, specifically spunbond, hydro-entangled, needled webs and laminated combinations of these. Also the web produced according to the present invention used in combination with other webs or substrates such as webs from elastomeric polymers,

microporous films or stretch limiting materials post laminated to limit the CD extensibility to less than 100% provide additional performance properties for added utility.

[0016] Meltblowing is a well known process which generally utilizes equipment depicted in the schematic of Figure 1. The process is carried out by introducing a thermoplastic resin into a extruder 10 where the polymer it is heated, melted, and extruded through a die 11 to form a plurality of side-by-side filaments 12 while converging layers of hot air (discharging from slots 13 on each side of the row of filaments) contact the filaments and through drag forces stretch and attenuate the filaments 12 to a micron-size. The fibers 12 are collected onto a collector such as a rotating screen 15 forming a nonwoven web 17 which may be withdrawn on a take-up roller for later processing. The collector 15 may include a vacuum screen wherein a vacuum, through line 18, is drawn by a vacuum pump 19.

[0017] The hot air (primary jet air) is introduced into opposite sides of the die through line 14. Although not indicated on the drawing, secondary air which is aspirated into the primary air/fibrous stream serves to cool the filaments discharging from the die 11.

[0018] The process and apparatus described above forms no part of the present invention; however, variables used in the process, (including the type of resin employed, the amount and temperature of primary air and polymer melt, and the spacing of the collector 15 from the die discharge) will have a significant effect on the precursor web properties.

[0019] Briefly, the process in one embodiment of the present invention comprises the steps of (a) selecting a thermoplastic nonwoven precursor web with substantial fiber bonding and having relatively low processing extensibility and (b) passing the nonwoven web through a heated zone to increase the temperature of the web to its softening temperature while drawing the web in the machine direction (MD) thereby greatly plastically bending the cross direction (CD) fibers in the web which consolidates the web in the CD reducing the maximum pore size of the precursor web by at least 20 percent, and, more significantly, reducing the pore size distribution by at least 20%. As described in detail below, the precursor web must have certain properties to enhance consolidation.

[0020] Apparatus for carrying out a preferred process is illustrated schematically in Figure 2 wherein the precursor web 17 is unwound from roll 20 and fed through the nip of counter-rotating feed rollers 22, through oven 23, and finally through the nip of counter-rotating rollers 24. The oven 23 is maintained at a temperature to heat the precursor web 17 to a temperature between its softening point and the melting point of the polymers in the web. Preferably the web is heated to a temperature within 8,3°C (15°F) of its melting point. The rotating rollers 24 are driven at a speed in excess of the rotating feed rollers 22 so that the output velocity (V2) of the web is in excess of the feed velocity (V1) for the draw ratio which is a function of the velocity ratio V2/V1. The initial drawing of the web 17 under thermal conditions causes web to contract within the oven 23 from its feed width 17a as illustrated by web section 17b in Figure 2. This contraction is due primarily to the plastic bending deformation by planar compression of generally CD fibers of the web thereby reducing the measures of pore size of the web. It is important to note that the high MD tensile forces developed at low MD strain during drawing, together with the network nature of the fiber-fiber bonds in the web augments the generation of enough compressive stress to easily bend most CD fiber segments 27 and compact the web in the CD as shown in Figure 6. Since fiber bending rigidity is related to the fourth power of the fiber diameter, only webs having small average fiber diameters can be consolidated by the available stresses with the associated reduction in pore size measures. Average fiber diameter for meltblown webs are preferably less than about 9 microns, and less than about 50 microns for spunbonded webs.

[0021] The lateral contraction which results in pore size reduction is not accompanied by significant average fiber diameter reduction of MD fibers. Continued web stretching beyond that necessary for web pore size reduction may cause fiber diameter reductions. The web is contracted to a minimum width 17c as the web 17 exits the oven 23 or as the web 17 passes the nip of rollers 24. It is preferred but not essential to cool or permit the web to cool between the exit of the oven 23 and the nip of the rollers 24 thereby controlling the heat set or annealing in the restructured fibers under stress.

[0022] As the web 17 cools to between 130 and 90°C (for PP), the web can be electrostatically charged to impart durable enhanced filtration efficiency to the web products. (The nip of the rollers 24 and that of rollers 22 preferably are parallel so that the tensile force applied by rollers 24 and the resistance applied by rollers 22 are uni-directional [e.g., uniaxial]).

[0023] To further control or narrow the distribution of pore sizes, supplementary or alternative web-width compaction means can be added between 17a and 17c as schematically illustrated in Figure 3. Figure 3 shows one alternate web processing embodiment in which the web passes into a supplementary or alternative web compacting device consisting of a (tilted) section of a torus 25. The consolidation interval of the web 17 and the torus bar 25 are heated in an oven or heated to provide the proper temperatures for drawing and consolidating the web. The web enters the outboard surface (of diameter D) of the torus at width dimension 17d and exits near the inboard surface of the torus which has a lesser width dimension 17e. The converging surface of the path around the torus applies transverse compressive forces in the plane of the web of entry width 17d. The added compressive forces overcome the bending resistance of inefficiently deformed large CD fiber segments or shot imperfections remaining in the web 17 following primary consolidation (if used). This improves the uniformity in pore sizes. The heating and stretching of the apparatus in Figure

2 (gross drawing) and Figure 3 (secondary drawing) can be carried out in series. The primary heating-drawing step imparts gross consolidation while the secondary torus consolidator refines the processing. The maximum compressive strain imparted to the web by traversing about 180° around the torus surface is given by (D-d)/D, where D is the outboard or entry perimeter related to the entry width 17d and d is the inboard or web exit perimeter of the torus 25. The magnitude of the supplementary consolidation can be adjusted by adjusting the two diameters of the torus 25 compacting device or "c-roll" shown in Figure 3. If the c-roll is made straight (VIZ. radii = ∞), then no lateral compaction occurs and the roll solely increases the anneal time and maintains the thickness of the web. The torus surface can be fixed or can be a rotatable curved flexible bar. A fixed torus 25 with an air bearing between the surface and the web allows high lateral compressive strain and low friction for additional MD draw. It should be noted that revolving "Bowed rolls" are only used in textile applications to remove wrinkles from a moving textile fabric by laterally stretching the fabric as the textile proceeds around a surface of diverging width.

[0024] The important parameters of the precursor web 17 and the process condition, along with the unique properties of the web produced by the process are described in detail below.

[0025] Precursor Web: A nonelastomeric nonwoven precursor web is selected based on its dimensions, and its hot processing tensile properties (VIZ., elongation-at-break). In general, the breaking draw ratio of the web during hot processing should be less than about 4.0 and greater than about 1.4 evaluated while hot drawing at a strain rate greater than 2500 %/min and temperature greater than the softening point but at least 5,6°C (10 °F) less than the polymer melting temperature. This is an important indicator of precursor molecular orientation state for achieving sufficient stresses for CD fiber buckling and bending to cause reduction of the measures of pore size distribution of the web by the process of the present invention. The room temperature elongation (strain) at break should be between 2 and 40 percent, preferably between 5 and 20 percent, based on test method ASTM D 1117-77 using the Instron tensile testing machine. Note that the precursor webs disclosed in U.S. Patent 4,048,364 are totally unsatisfactory for use in the present invention because such precursor webs are characterized as having at least 50%, preferably at least 70%, standardized elongation before break, preferable max processing draw ratio greater than 5. Webs made up of low modulus, low crystalline (less than 22%), exhibit too much elongation at low tension in the heating and drawing step to permit development of the necessary stresses. The webs useful in the process of U.S. Patent 4,048,364 have far greater maximum draw ratio than 4 under the hot draw condition described above. It is estimated that these draw ratios are greater than 5.

[0026] Compressive stresses which buckle and bend CD fibers in the present invention are given by a sine function of the fiber tensile stress and the angles (see Figures 4 & 5) involved become smaller as MD processing draw ratio increases, so compressive forces diminish with draw ratio. In addition, the distribution of filament diameters in the above precursor web is an order of magnitude larger than those of the present invention and thus the bending rigidity of CD fibers is very much higher while compression stresses are relatively small during processing. Elastomeric polymer webs (e.g., elastomers having rubber-like properties of an elastomer or rubber; that is, having the ability to stretch at least twice their original length and retract at room temperature) cannot be used in the present invention.

[0027] The precursor nonwoven web may be made from many of the thermoplastics capable of being melt blown, provided the polymer selected develops filaments of sufficiently high tensile processing modulus to permit the development of high lateral compression forces on the web. The thermoplastic resins useable in the production of nonwovens includes the nonelastomeric polyolefins such as polyethylene, polypropylene including high density polyethylene, ethylene copolymers (including EVA and EMA copolymers with high tensile moduli), nylon, polyamides, polyesters, polystyrene, poly-4-methylpentene-1, polymethylmethacrylate, polytrifluorochlorethylene, polyurethanes, polycarbonates, silicones, polyphenelene sulfide.

[0028] The crystallinity of the precursor web preferably should be sufficiently high to provide a room temperature breaking elongation less than 40%. Meltblown webs useable in the present invention should break at a strain of less than 40 percent in accordance with ASTM test method D 5035-90. The crystallinity in the range of 30 to 70 percent is preferred. In general, the proper high modulus and state of molecular orientation of the precursor is best reflected by a maximum or breaking draw ratio of the web during post treating of less than about 4.0.

[0029] In the post-treatment process, the thickness of the web should preferably be at least 50,8 μm (2 mils) and up to about 5,08 mm (200 mils). The width of the web, of course, can vary within wide limits, with 127mm (5) to 3,81 m 150 inches being preferred. The average fiber diameter of the precursor meltblown web will preferably range from .5 to 8 microns, with 2 to 6 microns being preferred in order to provide the proper range of processing tensile stiffness for PP web. The porosity of the precursor web will normally be in the range of 50 to 95 percent. Calendered precursor webs approach 50%.

[0030] Other properties of the web, which while not critical, are important include a low occurrence of large shot or excessive ropiness.

[0031] Another important feature of the precursor web is that it includes at least some fiber-to-fiber bonding which is typical in meltblown webs. The bonding can be achieved by inherent fiber-to-fiber fusion, or by point bonding, calendering, or by fiber entanglement. The properties of the selected polymer can be controlled to a degree by operation

of the meltblowing process. Some of these control variables are disclosed under the experiments below.

[0032] Process Conditions: As indicated above, the primary purpose of the process of the present invention is to consolidate the web in the cross direction to reduce the average pore size and the pore size distribution in the web. Consolidation of the web in the cross-direction is to be distinguished from consolidation resulting from calendering since consolidation to reduce thickness as in calendering flattens the fibers and closes flow channels, thus decreasing the permeability of the web to a greater extent compared to web draw consolidation.

[0033] The random nature of low stretch meltblown webs with the attendant thermal bonding and/or filament entanglement enable the development of MD stresses to reorient fibers and create sufficient compressive stresses to laterally consolidate or squeeze them together thus reducing the size of voids there between during uniaxial drawing. This results in narrowing of the web width without disrupting the planar integrity of the web and produces a product of unique properties. During the post-drawing process, the modulus that is in effect while the filament segments are being drawn depends on processing time-temperature effects. Maximum consolidation in the CD is achieved at a trial and error modulus at which the compressive stresses overcome to the largest extent the critical buckling stresses for the population of CD segments in the web. This is illustrated in the post-drawing process preferably carried out at a temperature where the polymer is in the rubbery state. This is best illustrated with reference to Figures 4, 5 and 6 which depict, respectively, the random disposition of nonwoven fiber, an idealized representation of unconsolidated nonwoven fibers, and an idealized representation of consolidated nonwoven fibers. The random disposition of the filaments forming a thin planar layer of the meltblown web is represented in Figure 4 wherein longitudinal fibers 26 extend generally in the MD, transverse fibers 27 extended in the CD, and intermediate segments of fibers 28 extend at an angle with respect to the MD and CD.

[0034] For purposes of analysis, this planar disposition may be represented by representative cells illustrated in Figure 5. In the idealized representation or model in Figure 5, the fibers 26, 27, and 28 are shown interconnected or bonded as a loose network at junctions 29 of the fibers. Again, it is to be emphasized that the bonds are fuse bonded during the meltblown process, or by fiber entanglement, or by thermal point calendering techniques. When the web structure shown in Figure 5 is subjected to tension in the MD, the intermediate fibers 28 are easily aligned in the MD thus reducing pore dimensions whereas the CD fibers 27 tend to resist compression of the cell in which it is associated and may buckle and bend as illustrated in Figure 6. The result is that the lateral consolidation of the precursor web in accordance with the present invention leaves pore space throughout the web layer which depends on the extent to which CD fibers are buckled. Fiber having a high slenderness ratio of length by diameter buckle easier. Ideally, the compressive force on element 27 in Figure 6 is 2Tsin(theta) where T is the tensile force in elements 28 and θ is the angle between element 28 and the MD. Without the bonding at junctions 29, the webs would easily rupture without generating lateral (CD) compression as in a carded web. Although actual webs do not include only the idealized structure as depicted in Figures 4 and 5, there is sufficient bonding and stresses developed in the select precursor web to provide the reduced porosity following the thermal drawing process as in Figure 6 and 7. Note that the buckled CD fibers 27 act as spacers limiting the residual porosity and pore dimensions developed by the resultant compression forces due to the MD tensile drawing force. To supplement the compression of large diameter fibers and shot, external mechanical means can be incorporated to further compress the hot drawn web near 17c in order to augment the CD fiber bending and buckling beyond that obtained by hot drawing alone. One such apparatus embodiment is illustrated in Figure 3 described above in which the mostly drawn web is subjected to transverse compression forces because the web is tracking the converging surface of the torus.

[0035] The post-drawn web withdrawn from the oven and preferably heat set exhibits two surprising and highly useful properties: (1) the pore space and all measures of pore size distribution have been reduced, and (2) the web exhibits remarkable elasticity in the CD. These two properties will be discussed in detail later.

[0036] The post-drawing process conditions and precursor properties for achieving the web with the improved properties described above are as follows:

	BROAD RANGE	PREFERRED RANGE	BEST MODE
Draw ratio, V2/V1	1.05 - 3.00	1.10 - 2.00	1.2 -1.80
Temperature, °F (PP) °C	165 - 425 73.9 - 218.3	250 - 350 121.1 - 176.7	275 - 300 135 - 148.9
V1, Feed Speed, F/M	10 - 400	25 - 200	35 - 60
MAX pore size, μM	5 - 250	10 -150	20 - 50

(continued)

	BROAD RANGE	PREFERRED RANGE	BEST MODE
Crystallinity, %	30 - 95	30 - 80	35 - 60
Thickness, mils μm	2 - 200 50.8 - 5080	2 - 100 50.8 - 2540	6 - 20 152.4 - 508
Avg. Fiber Dia. μM	0.5 - 50	0.5 - 8	1.7 - 6
Strain rate, per min	10 - 500	20 - 200	30 - 60
Hot processing breaking draw ratio, V2/V1	1.3 - 4	1.7 - 3.5	2 - 3
Reduction in pore size (MAX, MFP, and range), %	20 - 85	25 - 75	35 - 70
Elastic recovery from 50% strain, %	50 - 99	70 - 99	80 - 95
Liquid absorption aspect ratio	1.2 - 6	1.76 - 5	2 - 4

[0037] It should be observed that the geometric minimum MD strain for complete lateral consolidation of an idealized web in Figure 5 is 42 percent or DR = 1.42. However, in the most preferred embodiment the invention contemplates draw ratios in excess of about 1.42 since higher draw ratios will enhance the reduction in porosity, which is limited by the spacer effects of partially buckled CD fibers.

OPERATION

[0038] The selection of the resin and meltblowing operating conditions, precursor webs having the necessary properties may be obtained based upon the above description.

[0039] Although the precursor webs made up of any of the thermoplastic polymers used in meltblowing (provided they possess the necessary properties) may be used, the following polypropylene precursor meltblown web has produced excellent results in experiments carried out at the University of Tennessee.

PP Grade (Exxon Grade)	PD-3495 G
MFR	800
Thickness	13 mil (330 μm)
Width	14 inches (355.6 mm)
Basis Weight	1.5 oz/yd^2 (50.8 g/m^2)
Porosity	87%
Crystallinity	50%
Web elongation at break	10%

[0040] As illustrated in Figure 2, the precursor web 17 in a generally flat disposition is processed according to the present invention by passing the flat web 17 in an oven 23 at a temperature between the softening and melting temperature of the polymer (e.g., for PP, about 154°C (130 degrees F.)). The line speed and draw ratio are selected to impart the desired lateral consolidation of the web expressed as a ratio of the web width entering to web 17 width exiting the oven (c/a in Figure 2). The c/a values should be from 1.3 to 4, preferably from 1.5 to 3, and most preferably 2 to 2.5. Web thickness entering the oven may range from 50,8 μm (2 mils) to 2,54 mm (100 mils) and those exiting may range from between 50,8 μm and 3,81 mm (2 and 150 mils), indicating that the thickness may under certain conditions increase. Draw ratios of 1.05 to 3.00, preferably from 1.10 to 2.00, and most preferably 1.2 to 1.8 may be used to achieve satisfactory consolidation. Line speeds (V2) can range from 3,048 to 121,92 m/min (10 to 400 fpm). As mentioned above, webs capable of hot processing breaking draw ratios greater than about 4 are unsuitable.

[0041] It is preferred that the consolidated and annealed web leaving the oven be cooled, either by ambient temperature or supplemental air to impart a set to the fibers in the deformed condition. The consolidated heat set web can be rolled up for later conversion to end use. products.

[0042] The web consolidation restructures the fibers of the web by aligning more of the fibers in the MD. The fiber bonding transforms tensile stress into CD consolidation in the manner described above, thereby reducing all of the web's measures of pore size distribution. These measures of pore size distribution of the web are the maximum pore size (MAX), the mean flow pore size (MFP), and the minimum pore size (MIN) as measured by a Coulter Porometer, described below in connection with Experiments. The Coulter Porometer produces a characteristic distribution - size plot for each web where pore size plotted against percent differential flow through the web. Figure 7 compares the characteristic curve for a precursor web (Plot 31), and the characteristic plot for the consolidated web (Plot 32). A comparison of Plot 31 (precursor web) and Plot 32 (consolidated web) illustrates the dramatic effect of consolidation. As can be seen in Figure 7, the pore size distribution ranged from about 13 to about 40 microns (a range or spread of 27 microns), and the mean flow pore size was about 20 microns.

[0043] In the consolidated web (Plot 32), pore size distribution ranged from 6 to 17.5 microns (a spread of only 11.5 microns), with the mean flow pore size of 9.4 microns. The web consolidation according to the present invention thus reduced the spread of the pore size distribution from 25 to 11.5 microns and the average pore size from about 20 (Plot 31) to about 9 (Plot 32). The maximum pore size (BP) was reduced from 38.7 to 17.5 microns. The consolidated web exhibited excellent "stretch fabric" elasticity in the CD and tested extremely well as a filter.

EXPERIMENTS

[0044] Definitions: In order to better understand the terms used herein, particularly in the Experiments described below, the following definitions consistent with the accepted technical definitions in the industry, are submitted.

[0045] Web Pore Space (porosity) - the ratio of the volume of air or void contained within the boundary of a material to the total volume expressed as a percentage. Packing density equals 1 minus porosity.

[0046] Coulter Porometer - a semiautomated instrument using a liquid displacement technique to measure the pore size measures and distributions of a sample according to ASTM F 316-86

[0047] Web Pore Size Distribution - the distribution of pore sizes between the maximum and the minimum pore size as determined by ASTM F 316-86 on the Coulter II Porometer. (The maximum pore size [or bubble point] measure is distinguished in that it strongly relates to permeability, pressure drop, and filtration efficiency performance properties for the entire family of meltblown webs we studied.)

[0048] ASTM 316 - 86 Measures of Pore Size Distribution - MAX is the standardized measure of the diameter of the largest pore channels in the distribution of pore sizes supporting flow through the web. MFP is the measure of the median (or mean) pore channel diameter for the pores supporting the total flow. MIN is the minimum pore size measured for the web.

[0049] Polymer Crystallinity - the relative fraction of highly ordered molecular structure regions compared to the poorly ordered amorphous regions. Crystallinity is determined by X-ray or DSC analysis.

[0050] Polymer Birefringence - is a property which is usually observed in optical microscopes when a material is anisotropic, that is when its refractive index is directional. Fibers having molecular chains of higher axial directionality have higher birefringence and relatively low tensile elongation at break.

[0051] Softening Temperature - is a thermal property of a polymer characterized by a temperature at which the material becomes sticky, viscus, or elastic (soft) prior to melting and looses its room temperature modulus (and can undergo plastic elongation) leading to maximum molecular orientation and breakage.

[0052] Average Fiber Diameter - a measure of the mean fiber diameter of the fibers in the web obtained from individual measures of the fibers diameters in focus on a scanning electron micrograph of the subject fibrous web--about 100 fibers are measured. Finer fibers generally arise from greater draw-down in meltblowing and have higher birefringence.

[0053] Web Elongation at Break - for a crystalline polymer is strain rate and temperature dependent. The elongation at break primarily measures the extent of a plastic deformation process beginning at the initial state and terminating at the final well ordered state of molecular orientation (MO) of the polymer. Precursor webs having fibers of high crystallinity and order have low elongation to break (from R.J. Samuels, Structured Polymer Properties, John Whiley & Sons, 1973). For the meltblown webs, evaluating the precursor MO state by breaking elongation is best accomplished at high temperatures instead of at standardized ASTM D 5035-90 room temperature test because of the wide range in fiber diameters, MO state and bonding in meltblown webs. The meltblown precursor webs were characterized by the magnitude of the breaking draw ratio attained while hot drawing at a strain rate at least 25 min-1 (or 2500 %/min) and temperature at least 10 F below the melting temperature of the precursor thermoplastic polymer (Hot breaking draw ratio).

[0054] Web Tensile Modulus - is the measure of the force required to produce a small extension (or compression). A highly inextensible material will usually have a large modulus.

[0055] Web Elasticity - that property of a body by virtue of which it tends to recover its original size and shape after deformation. Elastic recovery from elongation is given by (stretched length - recovered length)/(stretched length - original length). The recovery from an initial elongation is stated, such as, from a 100% CD strain.

[0056] Materials and Equipment: All the samples used in the experiments were prepared using a meltblowing line at The University of Tennessee. The process conditions to produce a desired sample for evaluation were controlled as follows:

(a) the level of hot-drawability, as related to birefringence and tensile modulus during processing is a function of fiber-diameter and was controlled by varying the primary air levels in the line from 70 to 95%,
(b) the level of bonding in the web was controlled by adjusting the air to polymer ratio, the die to collector distance, the air temperature, the melt temperature and collector vacuum. Tenacity and the elongation-at-break was used to qualify the bonding strength for the samples.

[0057] The slenderness ratio of fiber segments subjected to compression as well as the magnitude the bending forces developed by drawing are ultimately related to the above.

[0058] The post-drawing on the precursor web was done in experimental apparatus similar to that illustrated in Figure 2 and 3. The rollers were provided with speed controls.

[0059] The polymer used in all of the tests was polypropylene (PP). The PP precursor web samples used in the tests are described in TABLE I.

TABLE I

					Pore Sz. Measures,μm			
Sample	% Air	Packing Density	Ave. Fiber Diam. μm	Break Elong.	Max	MFP	Min	Break D.R.
A	90	0.095	3.2	7.4	19.3	15.4	11.1	2.2
B	90	0.110	3.9	6.3	17.9	14.3	10.5	2.5
C	85	0.085	4.0	17.4	28.3	16.6	10.7	2.5
D	80	0.129	5.5	6.6	38.8	20.1	13.8	3.0
E	70	0.145	8.5	3.0	20.8	14.4	10.9	3.5
F	70	0.163	9.9	4.1	40.5	24.2	16.5	3.7
G	70	0.172	8.8	5.7	33.0	20.6	13.7	3.8
H	60	0.168	18.5	2.7	117.0	68.0	25.0	6.0

[0060] Filtration Measurement: The filtration efficiency was based on dry particulate capture efficiency test using nominal 1.0 micrometer mono dispersed latex particles at an aerosol flow rate of 10 centimeters per second (ASTM 1215).

[0061] The filtration experiments were carried out as described above. Each webs "filtration" performance is expressed as particle capture efficiency (filtration efficiency) based on the following formula:

$$\text{F.E.} = \frac{\text{Number of particle counted without filter - Number with filter) x 100,\%}}{\text{Number without filter}}$$

[0062] Web Measurements: Fiber diameters were measured by SEM photographs of the specimens.

[0063] Maximum, mean flow pore size, minimum, and pore size distribution spread in terms of the maximum and minimum, was based on a Coulter Porometer according to ASTM F 316-86.

[0064] Pore Space: Measurements were based on weights of dry specimens and the weight of the specimen wetted out with a liquid of known density. Planar densification is evidenced by the increase in packing density (PD) measure of the web given by the ratio of dry web weight to the weight of the void-free web. Porosity of the web or pore space is given by one minus the packing density.

[0065] The tests for measuring elasticity of the consolidated web were as follows: Measured the percentage to which specimen recovered its original (CD) length immediately following a given % (CD) elongation, for example, sample A recovered 92 % of its original length following a 100% CD elongation. Another test on the consolidated webs included directional absorption of liquids. Surfactants for improving the water wettability of the fibers were applied to PP webs prior to aqueous absorption tests. The surfactants were nonionic and other types such as nonionic polyoxyethylenated tert-octylphenol, anionic ammonium lauryl sulfate, and cationic sulfobetaines. Directional absorption was characterized by the aspects ratio of the absorption pattern produced when a ML of liquid was applied to a point on the specimen supported on a horizontal surface. For a variety of meltblown and spunbonded specimens, absorption aspect ratios ranged from 1.7 to about 5. The test results carried out on the webs consolidated at a DR of 2 are presented in TABLES II. Table III gives the filtration efficiency values for meltblown webs variously consolidated at draw ratios of 1.0 (undrawn

precursor web), 1.5 (precursor drawn 50 %), 2.0 (these data also plotted in Figure 9), and 2.5.

TABLE II

				Properties of DR = 2.0, % of precursor web			
		Elastic recovery from strain of			Pore Size Measures, μm		
Sample	Oven Temp. °	50%	100%	Packing Density	Max.	MFP	Min.
A	150	95	92	214	50	46	42
B	155	93	Break	250	44	39	39
C	150	95	90	302	49	60	65
D	150	95	90	163	38	48	51
E	150	87	Break	124	155	124	118
F	150	Break	Break	101	73	76	78
G	150	85	Break	95	113	103	108
H	150	Break	Break	99	128	115	-

[0066] The Table II data and properties of webs consolidated at DR = 2 reveal that the pore sizes of sample A through D were reduced by 38 to 65% and the packing density for the same samples were increased from 163 to 302%.

TABLE III

Filtration Efficiency, %				
Sample	DR=1	DR=1.5	DR=2.0	DR=2.5
A	43	74	77	Break
B	45	86	89	80
C	32	64	66	81
D	21	35	54	60
E	14	13	22	18
F	16	20	19	29
G	14	13	18	18
H	6	4	4	3

[0067] In Table I, the maximum hot draw ratio is the magnitude of the breaking draw ratio during hot processing and solely defines the molecular orientation present in the filaments of the precursor melt blown webs. Web of PP having a maximum DR greater than about 3.5 are not consolidated according to the present invention. Compare pore measures in Table I and the changes produced at a DR of 2.0 in Table II. The data on Figure 9 indicates that filtration efficiencies improve significantly for fiber diameters less than 8 microns, particularly less than 6 microns, the preferred and most preferred fiber sizes.

[0068] Figure 8 is a plot of packing density (PD) versus average fiber diameter for the precursor and processed webs. Figure 8 indicates that web densification or consolidation initiates in meltblown precursor webs having average fiber diameters less than about 8 μm for meltblown polypropylene webs. MB webs from precursors having fiber diameters greater than about 8 microns experience little to no alteration in packing density (or other performance properties) according to the method of the present invention. Other measures of web performance such as filtration efficiency, air permeability, and maximum pore size (see Table I, II and Table III) show similar response to web average fiber diameter as shown in Figure 9 for filtration efficiency. In the experiments, these properties were generally maximized by post treating at draw ratio between about 1.5 and 2.0 for the precursors.

ALTERNATIVE EMBODIMENTS

[0069] Spunbond Webs: As indicated above, the principles embodied in the present invention have application with nonwoven webs others than meltblown webs. For example, for spunbond webs which are characterized as having an average filament diameters of 7 to 50 microns and elongation to break less than about 200% according to ASTM Test D 5035-90. The spunbond webs are prepared by melt spinning a multiplicity of filaments molecularly oriented by plastic deformation draw-down and depositing the same on a moving collector to form a random collection of uniform filaments arranged similar to that depicted in Figure 4. The deposited filaments are then bonded by mechanical entangling,

needling, hot calendering or otherwise thermal bonding at a plurality of points to impart integrity and strength to the spunbond material. It should be noted that bonding such as thermal or mechanical bonding is normally necessary since the filaments are not typically fused or sufficiently entangled upon being laid or deposited on the collector. For spunbonded precursors, the bonding must be strong (such as high temperature point bonding) in order to locally elongate, buckle, and bend the filament segments without spoiling the web integrity (see Figure 5 and 6) because the drawn filaments have relatively high tenacity and modulus. In point bonding, the bond points and bonding pattern generally are as follows: The area of heated bonding points are 5 to 25% of the roll area and the shape of the raised points can be diamond shaped or a number of other shapes and point distribution.

[0070] The consolidation of the spunbond (SB) web in accordance with the present invention occurs as follows: Hot drawing the SB web creates reduction in the measures of pore size and creates CD elasticity because the tensile forces generate sufficient compressive forces to plastically buckle and bend CD segments of the filaments for inve itive reduction of pore measures. The elasticity in the CD direction is a result of elastic recovery from bending of the well bonded network of strong filaments arranged similar to that idealized in Figure 6.

[0071] An example of the spunbond process was as follows: Spunbonded web was 1 meter wide, 33,9 g/m^2 (1 oz/sq. yd.) produced from 35 MFR PP on a Reicofil machine bonded between 90 and 140°C at the University of Tennessee. Oven temperature 157,2 °C (315°F), draw ratio 1.20 output velocity (V2) 50 FPM (15,24 m/min).

[0072] Electrostatic Charged Webs: Another variation contemplated by the present invention is to apply an electrostatic charge to the consolidated web to improve its filtration performance. The charging in the production of electrets can be applied by a variety of techniques described in the patent literature. See for example U.S. Patent 4,592,815. It is anticipated that the higher packing density of fiber in the hot consolidated webs results in an unusually high effectiveness of electron implantation in the web. As an example of the effect of charging consolidated samples on web Filtration Efficiency (FE), a 33,9 g/m^2 (1.0 oz/sq.yd) precursor meltblown sample had an FE of 30%, the FE after only consolidating this web at a DR of 1.5 was 79%, and finally the FE after charging this consolidated web was 99.8%.

[0073] Since meltblown webs and spunbonded webs are relatively isotropic, the invention process can also be carried out by hot drawing in the CD as a continuous process (such as on a tenter frame at negative or minimal MD tension) or on a "by piece" process.

[0074] Laminate and Composite Webs: As mentioned above, the precursor web comprises a composite of the following combinations: meltblown web/meltblown web (different webs), meltblown web/other nonwoven web (e.g., spunbond, hydroentangled, etc.) also, webs of thermoplastic/ nonthermoplastics combinations make useful precursors. These composite precursors can be made by techniques well known in the art. The composite may also include more than two layers. The meltblown web of the composite will have the properties described above.

[0075] One particularly useful composite precursor is the spunbond/meltblown/spunbond (SMS) structure.

[0076] The meltblown web should have the properties described above for meltblown webs. The spunbond webs may be the same or different but should have the properties described above for spunbond webs. The SMS composite precursor may be made by conventional methods, well known in the art.

[0077] The spunbond webs add strength and abrasion resistance to the structure thus increasing the application of the webs consolidated by the process of the present invention, particularly in the areas of surgical gowns, drapes, health care packaging, etc. The consolidated composite is characterized by:

(a) good elasticity in the CD;
(b) good strength; and
(c) improved filtration efficiency.

[0078] It has also been observed that hot or cold CD stretching following consolidation by MD stretching (as described above) produces an open reticulated fabric having exceptional web uniformity and high porosity for an open structure. Hot stretching in the CD at large draw ratios (e.g., about 1.4) produces a netting structure that has applications such as high porosity HVAC filters and containers.

[0079] The following experiments demonstrate the effect of drawing an SMS precursor web in accordance with the process of the present invention. The SMS web was thermally point bonded and had the following composition:

	Web Composition	Thickness, Mils /µm	Basis Wt, oz/yd^2 / g/m^2
S	Spunbond PP	3 / 76,2	0.3 / 10,17
M	Meltblown PP	9 / 228,6	1.7 / 57,63
S	Spunbond PP	3 / 76,2	0.3 / 10,17

[0080] The precursor web was processed at a draw ratio of 1.9 through a 157 °C (315 degree Fahrenheit) oven at 6,4 m/min (21 fpm). The drawn web was permitted to cool to room temperature while under the applied MD tension.

[0081] Cyclic load-extension tests in the CD were carried out. TABLE IV presents the results.

TABLE IV

Peak Load (Grams)					
				CD Extension Recovery, %	
Sample	Stretch	1st Cycle	5th Cycle	1st Cycle	5th Cycle
SMS	50%	95	90	82	73
	100%	410	380	60	46
	200%	1540	1440	237	32

[0082] The elasticity of the drawn SMS fabric makes the fabric particularly useful in surgical gowns requiring relatively high strength, stretchability and barrier properties.

[0083] The same consolidated SMS fabric was tested for filtration efficiency. The filtration tests were carried out on the SMS fabric without consolidation and the SMS fabric after consolidation. The drawn or consolidated SMS web exhibited a filtration efficiency of 80.8% whereas the precursor SMS web exhibited a filtration efficiency of only 67.7%.

SUMMARY

[0084] As demonstrated by the experimental data herein, the method of the present invention produces a nonwoven fabric that posses unique and useful properties that lends the fabric to application in a variety of fields. The properties of reduced pore size and pore size distribution makes the web ideally suited for filtration and absorption. The property of CD elasticity increases the web utility in filtration (e.g., surgical masks where conformance to the face contours is important) and other uses such as flexible gowns or diapers and hygiene products.

Claims

1. A method for lateral consolidation of and reduced pore size of a web which comprises

(a) heating a precursor nonwoven web (17) of randomly collected nonelastomeric thermoplastic fibers, wherein the fibers of the precursor web have a crystallinity of at least 30% and wherein the precursor web (17) is made of a laminate of at least two distinct nonwoven web layers, each web layer has distributed throughout fiber-fiber bonding (29), wherein the web layers are thermally bonded together at spaced apart locations, said heating being at a temperature between the softening temperature and melting temperature of the thermoplastic fibers,

(b)' drawing the heated web (17) under tension in a substantial longitudinal direction (MD) to cause the web to consolidate laterally without disrupting the planar integrity of the web and thereby reduce the maximum pore size measure of the web by at least 20%, said consolidated web (17) forming a loose network of interconnected fibers (26-28) and having a maximum processing draw ratio at break of less than 4 at a temperature of at least 5.6°C (10°F) less than the melting point of the precursor thermoplastic and at a strain rate of at least 2500 %/min, and a maximum pore size measure of from 4 to 250 microns based on ASTM F 316-86,

wherein the heating and drawing steps are carried out continuously by passing the precursor web (17) into an oven (23) at a first linear velocity (V_1) and withdrawing the precursor web from the oven at a second linear velocity (V_2), the ratio of the second velocity to the first velocity ranges from about 1.1:1 to 2:1.

(c) cooling the web or permitting the web to cool,

wherein the web is drawn and cooled to a maximum pore size of less than 80% that of the precursor web and to an elasticity in the cross direction defined by at least 70 % recovery from a 50% elongation in the cross direction and to an elongation at break in length direction of less than 30% based on ASTM D 5035-90.

2. The method of claim 1 wherein the drawing step is sufficient to provide the web with a mean flow pore size measure at least 20% smaller than the mean flow pore size of the precursor web.

3. The method of claim 1 wherein the drawing step is sufficient to provide the web a packing density at least 20% greater than that of the precursor web.

4. The method of claim 1 wherein the cooling step is carried out prior to release of the drawing tension and cools the

web (17) to a temperature below the softening temperature of the thermoplastic.

5. The method of claim 1 wherein the nonwoven precursor web (17) is a meltblown web having an average fiber diameter of 0.5 to 8 microns.

6. The method of claim 1 wherein the thermoplastic is a polyolefin selected from the group consisting of polypropylene, polyethylene, and copolymers thereof, and the heating step is carried out at a temperature of between 87.8 to 176.7°C (190 to 350°F).

7. The method of claim 1 wherein the thermoplastic is selected from polyesters, polyamides, cellulose triacetate, cellulose diacetate, poly-4-methylpenetene-1, polyphenelene sulfide, liquid crystal polymers and fluoropolymers.

8. The method of claim 6 wherein the meltblown precursor web has randomly distributed throughout fiber-fiber bonding (29).

9. The method of claim 1 wherein the precursor nonwoven web (17) is a spunbond web having the fibers (26-28) of from 7 to 50 micron average diameter and having spaced apart bonds (29) distributed through the web.

10. The method of claim 1 and further comprising the step of passing the drawn web (17a) over a bar (25) or roller having a surface to impart transverse compression forces inwardly of the width of the web.

11. The method of claim 5 wherein the precursor nonwoven web has a breaking elongation less than 40% based on ASTM D 5035-90.

12. The method of claim 1 wherein the first velocity (V_1) is controlled by passing the precursor web (17) through the nip of first counter rotating rollers (22) prior to the heating step, and the second velocity (V_2) is controlled by passing the consolidated web through the nip of second counter rotating rollers (24) after the heating step, and wherein the consolidated web is permitted to cool to a temperature below the softening point of the thermoplastic prior to passing through the nip of the second counter rotating roller (24).

13. The method of claim 1 wherein the precursor web (17) is a composite compressing a spunbond layer, a meltblown layer and a spunbond layer.

14. The method of claim 1 wherein the precursor web has a width of 152 to 4064 mm (6 to 160 inches) and a thickness of 50.8 μm to 2.54 mm (2 to 100 mils) and wherein the drawn web has a width of less than 80% of the precursor web and a thickness of 50.8 μm to 3.81 mm (2 to 150 mils) and wherein the thickness ratio of the drawn web and precursor web ranges from 1:1 to 1.5:1.

15. A nonwoven web made from a precursor nonwoven web, said precursor web comprising randomly collected nonelastomeric thermoplastic fibers (26-28) having a cystallinity of at least 30% and being uniaxially drawn and heat set, the precursor web (17) is made of a laminate of at least two distinct nonwoven layers, each layer made of randomly collected nonelastomeric thermoplastic fibers (26-28) and each web layer has distributed throughout fiber-fiber bonding (29) wherein the web layers are thermally bonded together at spaced apart locations, wherein the uniaxial heating and drawing are carried out continuously by passing the precursor web (17) into an oven (23) at a first linear velocity (V_1) and withdrawing the precursor web from the oven at a second linear velocity (V_2) and wherein the ratio of the second velocity to the first velocity ranges from about 1.1:1 to 2:1, whereby a majority (26,28) of the fibers are consolidated and aligned generally in the direction of draw (MD) and a minority (27) of segments of fibers are disposed crosswise or transversely to the direction of draw,

wherein said consolidated web forms a loose network of interconnected fibers and has a maximum processing draw ratio at break of less than 4 at a temperature at least 5.6°C (10°F) less then the melting point of the precursor thermoplastic and at a strain rate of at least 2500 %/min, and a maximum pore size measure of from 4 to 250 microns based on ASTM F 316-86,
wherein the consolidated web has a maximum pore size of less than 80% that of the precursor web and has an elasticity in the cross direction defined by at least 70% recovery from a 50% elongation in the cross direction and has an elongation at break in length direction of less than 30% based on ASTM D 5035-90.

16. The nonwoven web of claim 15 wherein the fibers (26-28) are nonelastometric thermoplastic meltblown fibers

randomly bonded and having an average diameter of 0.5 to 8 microns.

17. The nonwoven web of claim 16 wherein the fibers (26-28) are at least partially coated with a surfactant for increasing the water wettability of the fabric.

18. The nonwoven web of claim 17 wherein the web (17) has a mean flow pore size of between 3 to 40 microns.

19. A laminate comprising:

(a) the web of claim 16; and
(b) a polymeric substrate bonded to said web.

20. The laminate of claim 19 wherein the substrate is an elastomeric web.

21. The laminate of claim 19 wherein the substrate is a film.

22. The laminate of claim 19 wherein the substrate is a textile that limits the cross direction extensibility of the laminate to less than 100% strain.

23. A nonwoven web according to claim 15, wherein a portion of said fibers (27) extending traverse the longitudinal direction are bonded to the longitudinal fibers (26, 28) without disrupting the planar integrity of the web.

24. A filter of nonwoven web consolidated laterally and having reduced pore size constructed from a nonwoven web of claim 15.

25. The filter of claim 24 wherein the filter having a basis weight of less than 50,85 g/m^2 (1.5 oz/sq. yd) is capable of capturing at least 50 % of particles larger than or equal to 1 micron measured at an aerosol velocity of 10 centimeters/sec.

26. A face mask comprising the filter of claim 25.

27. The filter as defined in claim 25 wherein the fibers contain an electrostatic charge.

28. The filter as defined in claim 25 wherein the web has an electrostatic charge applied thereto.

Patentansprüche

1. Verfahren zur seitlichen Kondolidierung und Verkleinerung der Porengröße eines Stoffs, welches umfasst:

(a) Erhitzen eines Vorläufervliesstoffes (17) aus zufällig vereinigten nicht-elastomeren thermoplastischen Fasern, worin die Fasern des Vorläuferstoffs eine Kristallinität von zumindest 30 % aufweisen und worin der Vorläuferstoff (17) aus einem Laminat aus zumindest zwei unterschiedlichen Vliesstofflagen hergestellt ist, worin jede Stofflage durchgehend verteilte Faser-Faser-Bindungen (29) aufweist, worin die Stofflagen an voneinander beabstandeten Stellen thermisch miteinander verbunden werden, wobei das Erhitzen bei einer Temperatur zwischen der Weichtemperatur und der Schmelztemperatur der thermoplastischen Fasern erfolgt,
(b) Strecken des erhitzten Stoffs (17) unter Spannung im Wesentlichen in der Längsrichtung (MD), um den Stoff seitlich zu konsolidieren, ohne die planare Integrität des Stoffs zu unterbrechen und hierdurch das maximale Porengrößenmaß des Stoffs um zumindest 20 % zu reduzieren, wobei der konsolidierte Stoff (17) ein loses Netzwerk aus miteinander verbundenen Fasern (26 - 28) bildet und ein maximales Prozess-Bruchstreckverhältnis von weniger als 4 bei einer Temperatur von zumindest 5,6 °C (10 °F) unter dem Schmelzpunkt des Vorläuferthermoplasts und bei einer Reckrate von zumindest 2500 %/min sowie ein maximales Porengrößenmaß von 4 bis 250 Mikron auf der Basis von ASTM F 316-86 aufweist,
worin die Erhitzungs- und Streckschritte kontinuierlich durchgeführt werden, indem der Vorläuferstoff (17) in einen Ofen (23) mit einer ersten linearen Geschwindigkeit (V_1) eintritt und der Vorläuferstoff aus dem Ofen mit einer zweiten linearen Geschwindigkeit (V_2) abgezogen wird, wobei das Verhältnis der zweiten Geschwindigkeit zur ersten Geschwindigkeit von etwa 1,1 : 1 bis 2 : 1 reicht,
(c) Kühlen des Stoffs oder Abkühlenlassen des Stoffs,

worin der Stoff auf ein maximales Porengrößenmaß von weniger als 80 % das des Vorläuferstoffs und auf eine Elastizität in Querrichtung, definiert durch zumindest 70 %ige Erholung aus einer 50 %igen Dehnung in der Querrichtung, und auf eine Bruchdehnung in der Längsrichtung von weniger als 30 % auf der Basis von ASTM D 5035-90 gestreckt und gekühlt wird.

2. Verfahren nach Anspruch 1, worin der Streckschritt ausreicht, um dem Stoff ein mittleres Durchflussporengrößenmaß von zumindest 20 % kleiner als der mittleren Durchflussporengröße des Vorläuferstoffs zu geben.

3. Verfahren nach Anspruch 1, worin der Streckschritt ausreicht, um dem Stoff eine Packungsdichte von zumindest 20 % größer als jener des Vorläuferstoffs zu geben.

4. Verfahren nach Anspruch 1, worin der Kühlschritt vor dem Lösen der Streckspannung durchgeführt wird und den Stoff (17) auf eine Temperatur unter der Weichtemperatur des Thermoplasts abkühlt.

5. Verfahren nach Anspruch 1, worin der Vorläufervliesstoff (17) ein schmelzgeblasener Stoff mit einem durchschnittlichen Faserdurchmesser von 0,5 bis 8 Mikron ist.

6. Verfahren nach Anspruch 1, worin das Thermoplast ein Polyolefin ist, ausgewählt aus der Gruppe, die aus Polypropylen, Polyethylen und Copolymeren davon besteht, und der Heizschritt bei einer Temperatur von zwischen 87,8 bis 176,7 °C (190 bis 350 °F) durchgeführt wird.

7. Verfahren nach Anspruch 1, worin das Thermoplast aus Polyestern, Polyamiden, Cellulosetriacetat, Cellulosediacetat, Poly-4-methylpenten-1, Polyphenelensulfid, Flüssigkristallpolymeren und Fluorpolymeren ausgewählt ist.

8. Verfahren nach Anspruch 6, worin der schmelzgeblasene Vorläuferstoff durchgehende, zufällig verteilte Faser-Faser-Bindungen (29) aufweist.

9. Verfahren nach Anspruch 1, worin der Vorläufervliesstoff (17) ein spinngebundener Stoff mit Fasern (26 - 28) mit einem durchschnittlichen Durchmesser von 7 bis 50 Mikron und mit voneinander beabstandeten über den Stoff verteilten Bindungen (29) ist.

10. Verfahren nach Anspruch 1, das ferner den Schritt aufweist, den gestreckten Stoff (17a) über eine Stange (25) oder Rolle zu leiten, die eine Oberfläche aufweist, um innerhalb der Breite des Stoffs Querkompressionskräfte auszuüben.

11. Verfahren nach Anspruch 5, worin der Vorläufervliesstoff eine Bruchdehnung von weniger als 40 % auf der Basis von ASTM D 5035-90 aufweist.

12. Verfahren nach Anspruch 1, worin die erste Geschwindigkeit (V_1) gesteuert/geregelt wird, indem der Vorläuferstoff (17) vor dem Heizschritt durch den Klemmspalt erster gegenläufiger Walzen (22) geleitet wird, und die zweite Geschwindigkeit (V_2) gesteuert/geregelt wird, indem der konsolidierte Stoff nach dem Heizschritt durch den Klemmspalt zweiter gegenläufiger Walzen (24) geleitet wird, und worin der konsolidierte Stoff auf eine Temperatur unter dem Weichpunkt des Thermoplasts abkühlen gelassen wird, bevor er durch den Klemmspalt der zweiten gegenläufigen Walze (24) hindurchtritt.

13. Verfahren nach Anspruch 1, worin der Vorläuferstoff (17) ein Komposit ist, in dem eine spinngebundene Lage, eine schmelzgeblasene Lage und eine spinngebundene Lage komprimiert sind.

14. Verfahren nach Anspruch 1, worin der Vorläuferstoff eine Breite von 152 bis 4064 mm (6 bis 160 Zoll) sowie eine Dicke von 50,8 µm bis 2,54 mm (2 bis 100 mil) aufweist und worin der gestreckte Stoff eine Breite von weniger als 80 % des Vorläuferstoffs und eine Dicke von 50,8 µm bis 3,81 mm (2 bis 150 mil) aufweist, und worin das Dickenverhältnis des gestreckten Stoffs und des Vorläuferstoffs von 1 : 1 bis 1,5 : 1 reicht.

15. Aus einem Vorläufervliesstoff hergestellter Vliesstoff, wobei der Vorläuferstoff zufällig vereinigte nicht-elastomere thermoplastische Fasern (26 - 28) aufweist, die eine Kristallinität von zumindest 30 % aufweisen und uniaxial gestreckt und heißfixiert sind, wobei der Vorläuferstoff (17) aus einem Laminat aus zumindest zwei unterschiedlichen Vlieslagen hergestellt ist, wobei jede Lage aus zufällig vereinigten nicht-elastomeren thermoplastischen Fasern (26 - 28) hergestellt ist und jede Stofflage durchgehend verteilte Faser-Faser-Bindungen (29) aufweist,

worin die Stofflagen an voneinander beabstandeten Stellen thermisch miteinander verbunden sind, worin das uniaxiale Heizen und Strecken kontinuierlich durchgeführt wird, in dem der Vorläuferstoff (17) mit einer ersten linearen Geschwindigkeit (V_1) in einen Ofen (23) geleitet wird und der Vorläuferstoff aus dem Ofen mit einer zweiten linearen Geschwindigkeit (V_2) abgezogen wird, und worin das Verhältnis der zweiten Geschwindigkeit zur ersten Geschwindigkeit von etwa 1,1 : 1 bis 2 : 1 reicht, wodurch ein Großteil (26, 28) der Fasern allgemein in der Streckrichtung (MD) konsolidiert und ausgerichtet wird und ein kleinerer Anteil (27) von Faserabschnitten kreuzweise oder quer zur Streckrichtung angeordnet ist,

worin der konsolidierte Stoff ein loses Netzwerk aus miteinander verbundenen Fasern bildet und ein maximales Prozess-Bruchstreckverhältnis von weniger als 4 bei einer Temperatur von zumindest 5,6 °C (10 °F) unter dem Schmelzpunkt des Vorläuferthermoplasts und bei einer Reckrate von zumindest 2500 %/min sowie ein maximales Porengrößenmaß von 4 bis 250 Mikron auf der Basis von ASTM F 316-86 aufweist,
worin der konsolidierte Stoff eine maximale Porengröße von weniger als 80 % jener des Vorläuferstoffs aufweist und eine Elastizität in der Querrichtung, definiert durch zumindest 70 %ige Erholung aus einer 50 %igen Dehnung in der Querrichtung, aufweist und eine Bruchdehnung in der Längsrichtung von weniger als 30 % auf der Basis von ASTM D 5035-90 aufweist.

16. Vliesstoff nach Anspruch 15, worin die Fasern (26 - 28) nicht-elastomere thermoplastische schmelzgeblasene Fasern sind, die zufällig gebunden sind und einen durchschnittlichen Durchmesser von 0,5 bis 8 Mikron aufweisen.

17. Vliesstoff nach Anspruch 16, worin die Fasern (26 - 28) zumindest teilweise mit einem Tensid beschichtet sind, um die Wasserbenetzbarkeit des Stoffs zu erhöhen.

18. Vliesstoff nach Anspruch 17, worin der Stoff (17) eine mittlere Durchflussporengröße von zwischen 3 bis 40 Mikron aufweist.

19. Laminat, umfassend:

(a) den Stoff von Anspruch 16; und
(b) ein mit dem Stoff verbundenes polymeres Substrat.

20. Laminat nach Anspruch 19, worin das Substrat ein elastomerer Stoff ist.

21. Laminat nach Anspruch 19, worin das Substrat eine Folie ist.

22. Laminat nach Anspruch 19, worin das Substrat ein Textil ist, das die Dehnbarkeit des Laminats in Querrichtung auf weniger als 100 Reckung begrenzt.

23. Vliesstoff nach Anspruch 15, worin ein Teil der Fasern (27), der sich quer zur Längsrichtung erstreckt, mit den Längsfasern (26, 28) verbunden ist, ohne die planare Integrität des Stoffs zu unterbrechen.

24. Filter aus einem Vliesstoff, der seitlich konsolidiert ist und eine reduzierte Porengröße aufweist, aufgebaut aus einem Vliesstoff nach Anspruch 15.

25. Filter nach Anspruch 24, worin der Filter, der ein Basisgewicht von weniger als 50,85 g/m^2 (1,5 Unzen/yd^2) aufweist, in der Lage ist, zumindest 50 % von Partikeln, die größer oder gleich 1 Mikron sind, abzufangen, gemessen bei einer Aerosolgeschwindigkeit von 10 cm/Sekunde.

26. Gesichtsmaske mit dem Filter von Anspruch 25.

27. Filter nach Anspruch 25, worin die Fasern eine elektrostatische Ladung enthalten.

28. Filter nach Anspruch 25, worin der Stoff eine ihm hinzugefügte elektrostatische Ladung aufweist.

Revendications

1. Procédé de consolidation latérale et de diminution de grosseur de pores d'une bande, consistant à

(a) chauffer une bande initiale non tissée (17) en des fibres thermoplastiques non élastomères rassemblées aléatoirement, les fibres de la bande initiale présentant une cristallinité d'au moins 30 %, et la bande initiale (17) étant constituée d'un laminat d'au moins deux couches de bande distinctes non tissées, chaque couche de bande présentant une liaison répartie (29) entre fibres, les couches de bande étant solidarisées thermiquement en des emplacements mutuellement espacés, ledit chauffage s'opérant à une température comprise entre la température de ramollissement et la température de fusion des fibres thermoplastiques,
(b) étirer la bande (17) chauffée, en lui imposant une tension dans une direction sensiblement longitudinale (MD), pour obliger la bande à se consolider latéralement sans perturber l'intégrité planaire de ladite bande, et pour réduire ainsi, d'au moins 20 %, la taille maximale des pores de ladite bande, ladite bande (17) consolidée formant un réseau lâche de fibres (26-28) mutuellement solidarisées, et présentant un coefficient maximal d'étirage à la rupture inférieur à 4 à une température d'au moins 5,6°C (10°F), en deçà du point de fusion de la matière thermoplastique de la bande initiale, et à un taux de contrainte d'au moins 2 500 %/min, et une taille maximale de pores comprise entre 4 et 250 microns, en se fondant sur ASTM F 316-86,
sachant que les étapes de chauffage et d'étirage sont effectuées continûment, en introduisant la bande initiale (17) dans un four (23) à une première vitesse linéaire (V_1), et en extrayant la bande initiale hors du four à une seconde vitesse linéaire (V_2), le rapport entre la seconde vitesse et la première vitesse étant compris entre environ 1,1:1 et 2:1,
(c) refroidir la bande, ou permettre le refroidissement de la bande,
la bande étant étirée et refroidie jusqu'à une taille maximale de pores représentant moins de 80 % de celle de la bande initiale, et jusqu'à une élasticité transversale définie par un rétablissement d'au moins 70 % partant d'un allongement de 50 % dans le sens transversal, et jusqu'à un allongement à la rupture longitudinale inférieur à 30 %, en se fondant sur ASTM D 5035-90.

2. Procédé selon la revendication 1, dans lequel l'étape d'étirage est suffisante pour conférer, à la bande, une grosseur de pores moyenne inférieure d'au moins 20 % à la grosseur de pores moyenne de la bande initiale.

3. Procédé selon la revendication 1, dans lequel l'étape d'étirage est suffisante pour conférer, à la bande, une densité de tassement supérieure d'au moins 20 % à celle de la bande initiale.

4. Procédé selon la revendication 1, dans lequel l'étape de refroidissement est effectuée avant le relâchement de la tension d'étirage, et refroidit la bande (17) jusqu'à une température en deçà de la température de ramollissement de la matière thermoplastique.

5. Procédé selon la revendication 1, dans lequel la bande initiale non tissée (17) est une bande soufflée par fusion, présentant un diamètre de fibres moyen de 0,5 à 8 microns.

6. Procédé selon la revendication 1, dans lequel la matière thermoplastique est une polyoléfine choisie dans le groupe comprenant le polypropylène, le polyéthylène, et des copolymères de ces derniers, et l'étape de chauffage est effectuée à une température comprise entre 87,8 et 176,7°C (190 à 350°F).

7. Procédé selon la revendication 1, dans lequel la matière thermoplastique est choisie au sein des polyesters, des polyamides, du triacétate de cellulose, du diacétate de cellulose, du poly-4-méthylpénétène-1, du sulfure de polyphénélène, de polymères cristallins liquides, et de polymères fluorés.

8. Procédé selon la revendication 6, dans lequel la bande initiale soufflée par fusion présente une liaison (29) entre fibres répartie aléatoirement.

9. Procédé selon la revendication 1, dans lequel la bande initiale non tissée (17) est une bande continue désorientée comportant les fibres (26-28) d'un diamètre moyen compris entre 7 et 50 microns, et présentant des liaisons espacées (29) réparties dans la bande.

10. Procédé selon la revendication 1, comprenant en outre l'étape consistant à faire défiler la bande étirée (17a) sur une barre (25) ou un rouleau présentant une surface propre à appliquer des forces de compression transversale à l'intérieur de la largeur de la bande.

11. Procédé selon la revendication 5, dans lequel la bande initiale non tissée présente un allongement à la rupture inférieur à 40 %, en se fondant sur ASTM D 5035-90.

12. Procédé selon la revendication 1, dans lequel la première vitesse (V_1) est commandée en faisant défiler la bande initiale (17) à travers l'interstice de premiers rouleaux rotatifs de comptage (22), préalablement à l'étape de chauffage, et la seconde vitesse (V_2) est commandée en faisant défiler la bande consolidée à travers l'interstice de seconds rouleaux rotatifs de comptage (24), postérieurement à l'étape de chauffage ; et dans lequel la bande consolidée est autorisée à se refroidir jusqu'à une température en deçà du point de ramollissement de la matière thermoplastique, préalablement au défilement à travers l'interstice des seconds rouleaux rotatifs de comptage (24).

13. Procédé selon la revendication 1, dans lequel la bande initiale (17) est un composite obtenu par compression d'une couche continue désorientée, d'une couche soufflée par fusion et d'une couche continue désorientée.

14. Procédé selon la revendication 1, dans lequel la bande initiale présente une largeur de 152 à 4 064 mm (6 à 160 inches) et une épaisseur de 50,8 µm à 2,54 mm (2 à 100 mils) ; dans lequel la bande étirée possède une largeur représentant moins de 80 % de celle de la bande initiale, et une épaisseur de 50,8 µm à 3,81 mm (2 à 150 mils) ; et dans lequel le rapport, entre les épaisseurs de la bande étirée et de la bande initiale, est compris entre 1:1 et 1,5:1.

15. Bande non tissée produite à partir d'une bande initiale non tissée, ladite bande initiale comprenant des fibres thermoplastiques (26-28) non élastomères, rassemblées aléatoirement, ayant une cristallinité d'au moins 30 %, et étant soumise à étirage et thermofixage monoaxiaux, la bande initiale (17) étant constituée d'un laminat d'au moins deux couches distinctes non tissées, chaque couche consistant en des fibres thermoplastiques (26-28) non élastomères, rassemblées aléatoirement, et chaque couche de bande présentant une liaison répartie (29) entre fibres, les couches de bande étant solidarisées thermiquement en des emplacements mutuellement espacés, le chauffage et l'étirage monoaxiaux étant effectués continûment, en introduisant la bande initiale (17) dans un four (23) à une première vitesse linéaire (V_1), et en extrayant la bande initiale hors du four à une seconde vitesse linéaire (V_2), et le rapport entre la seconde vitesse et la première vitesse étant compris entre environ 1,1:1 et 2:1, de sorte qu'une majorité (26, 28) des fibres est consolidée et alignée pour l'essentiel dans la direction d'étirage (MD), et qu'une minorité (27) de segments de fibres est disposée en travers ou transversalement par rapport à la direction d'étirage,

ladite bande consolidée formant un réseau lâche de fibres mutuellement solidarisées, et présentant un coefficient maximal d'étirage à la rupture inférieur à 4 à une température d'au moins 5,6°C (10°F), en deçà du point de fusion de la matière thermoplastique de la bande initiale, et à un taux de contrainte d'au moins 2 500 %/min, et une taille maximale de pores de 4 à 250 microns, en se fondant sur ASTM F 316-86,
la bande consolidée possédant une taille maximale de pores représentant moins de 80 % de celle de la bande initiale, et possédant une élasticité transversale définie par un rétablissement d'au moins 70 % partant d'un allongement de 50 % dans le sens transversal, ainsi qu'un allongement à la rupture longitudinale inférieur à 30 %, en se fondant sur ASTM D 5035-90.

16. Bande non tissée selon la revendication 15, dans laquelle les fibres (26-28) sont des fibres thermoplastiques non élastomères soufflées par fusion, solidarisées aléatoirement et présentant un diamètre moyen de 0,5 à 8 microns.

17. Bande non tissée selon la revendication 16, dans laquelle les fibres (26-28) sont au moins partiellement revêtues d'un agent de surface, afin d'accroître la mouillabilité de la structure par de l'eau.

18. Bande non tissée selon la revendication 17, dans laquelle ladite bande (17) présente une grosseur de pores moyenne comprise entre 3 et 40 microns.

19. Laminat comprenant :

(a) la bande de la revendication 16 ; et
(b) un substrat polymère relié à ladite bande.

20. Laminat selon la revendication 19, dans lequel le substrat est une bande élastomère.

21. Laminat selon la revendication 19, dans lequel le substrat est un film.

22. Laminat selon la revendication 19, dans lequel le substrat est un textile limitant l'extensibilité transversale dudit laminat à moins de 100 % de la contrainte.

23. Bande non tissée selon la revendication 15, dans laquelle une partie desdites fibres (27), s'étendant transversalement à la direction longitudinale, est reliée aux fibres longitudinales (26, 28) sans perturber l'intégrité planaire de ladite bande.

24. Filtre en une bande non tissée consolidée latéralement et présentant une grosseur de pores réduite, fabriquée à partir d'une bande non tissée selon la revendication 15.

25. Filtre selon la revendication 24, ledit filtre, présentant un poids de base inférieur à 50,85 g/m^2 (1,5 oz/sq. yd), étant en mesure de piéger au moins 50 % de particules supérieures ou égales à 1 micron, mesurées à une vitesse d'aérosol de 10 centimètres/s.

26. Masque facial comprenant le filtre de la revendication 25.

27. Filtre selon la revendication 25, dans lequel les fibres renferment une charge électrostatique.

28. Filtre selon la revendication 25, dans lequel une charge électrostatique est appliquée à la bande.

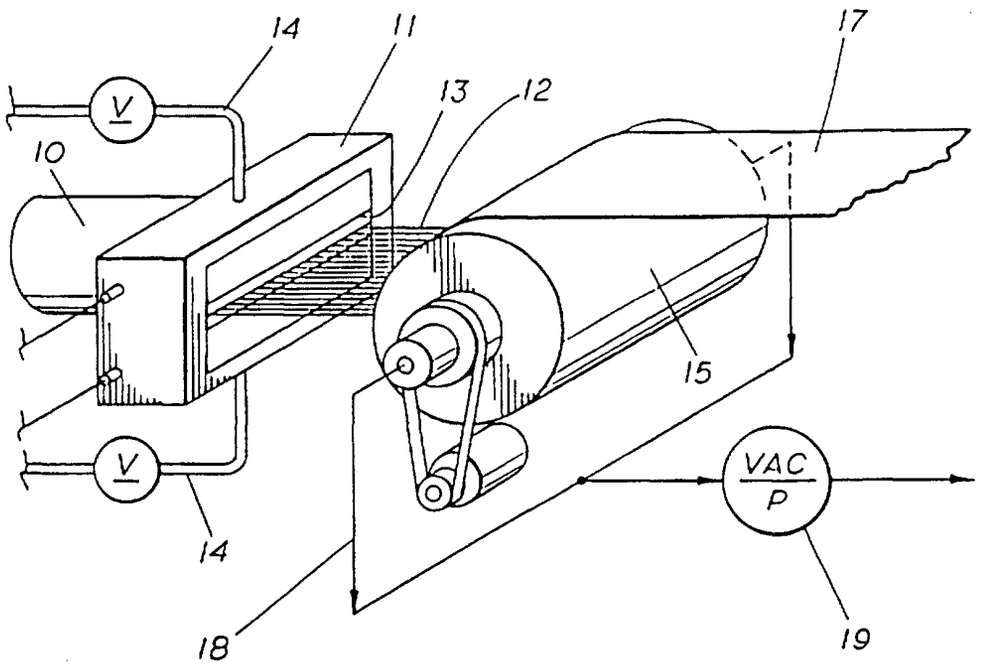
14
11
17
13
12
10
V
15
VAC
P
14
18
19

FIG.1

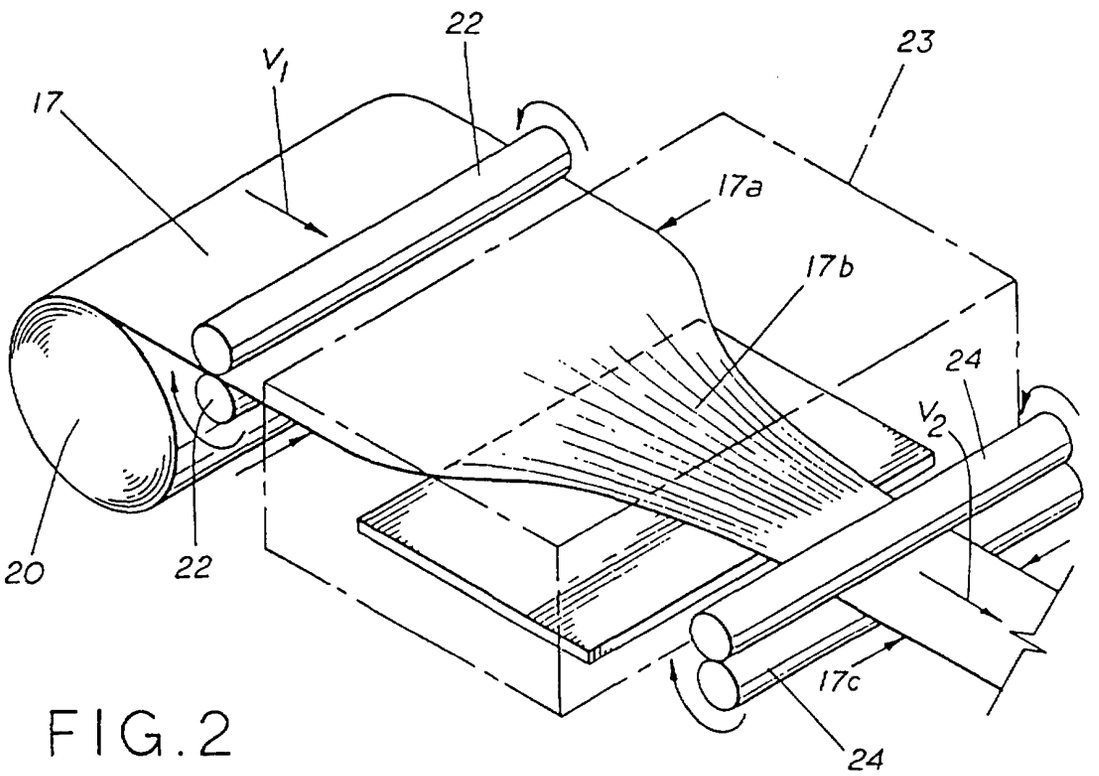
22
23
V_1
17
17a
17b
24
V_2
20
22
17c
24

FIG.2

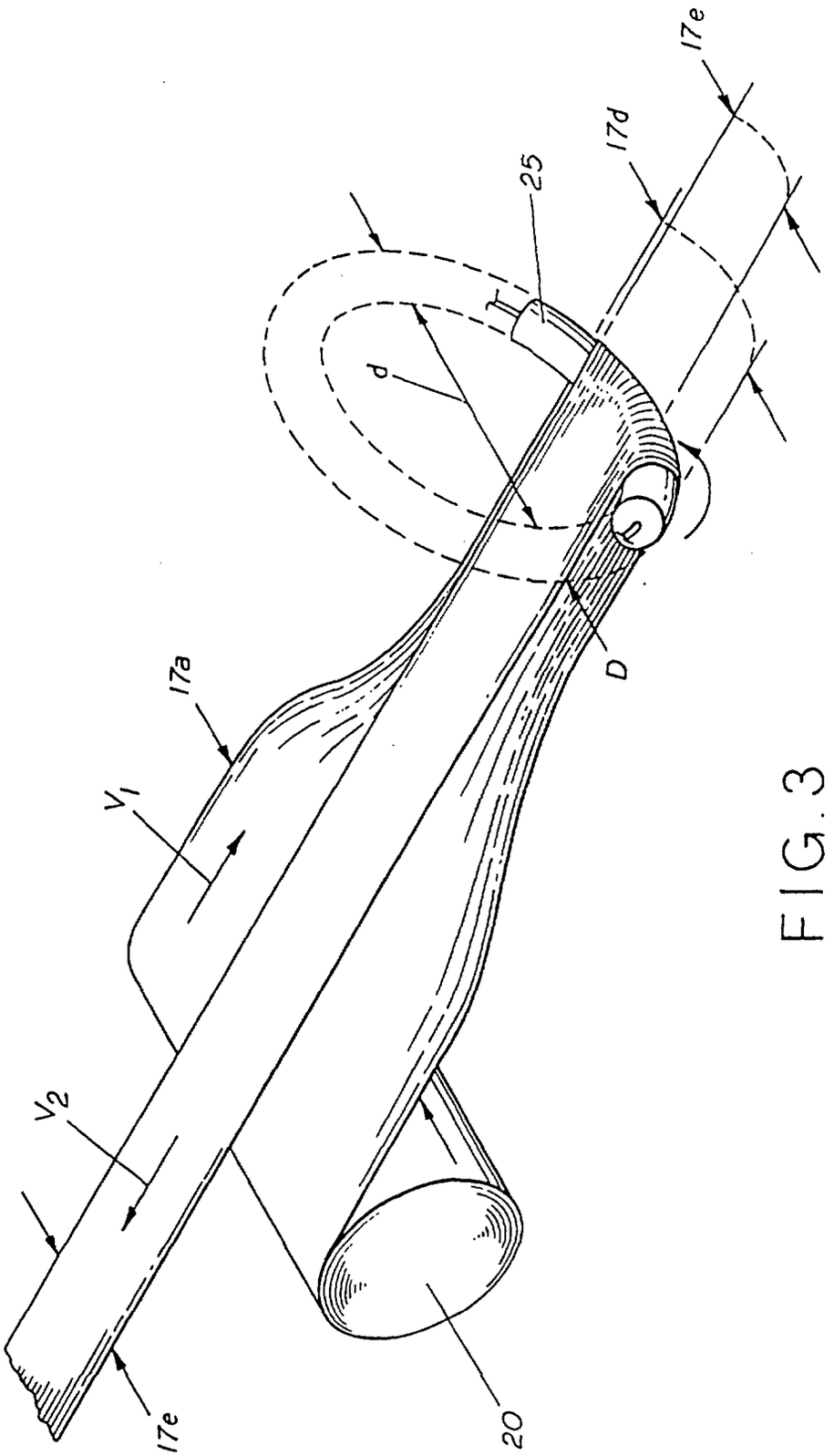

FIG. 3

FIG. 4

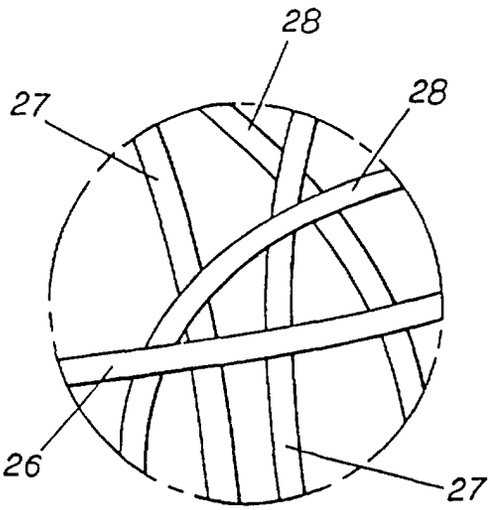

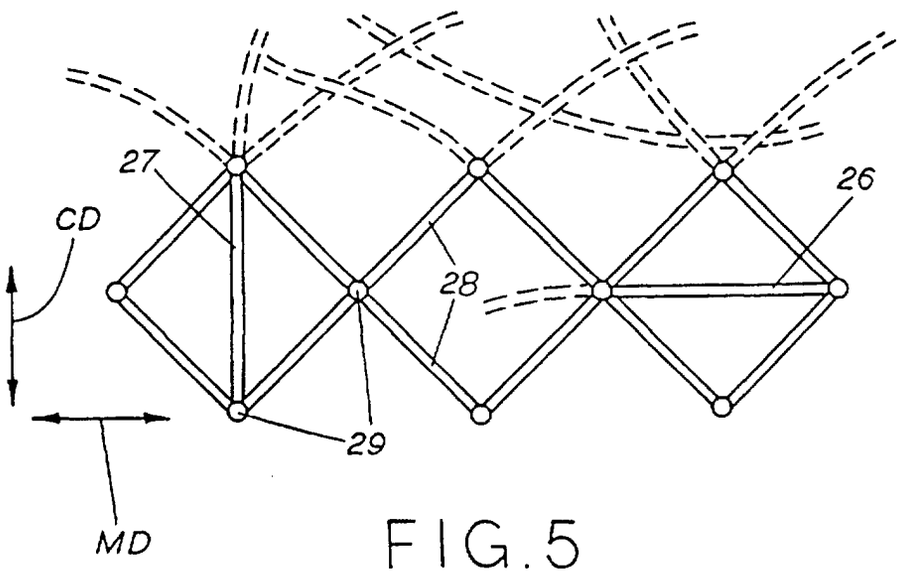

FIG. 5

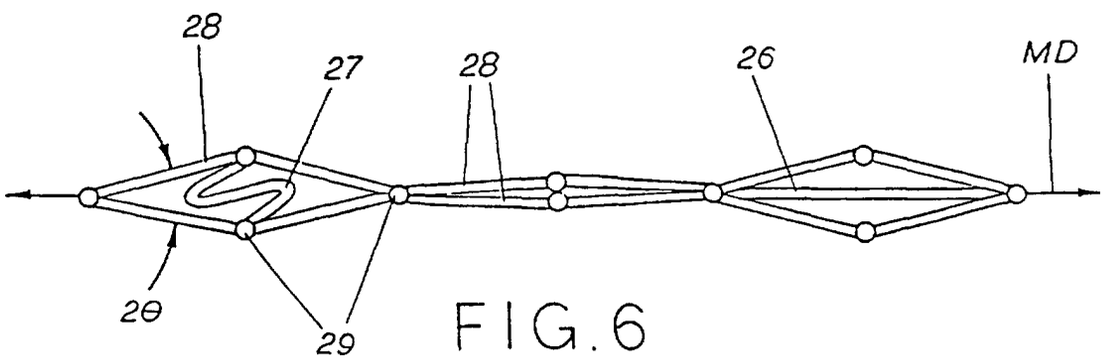

FIG. 6

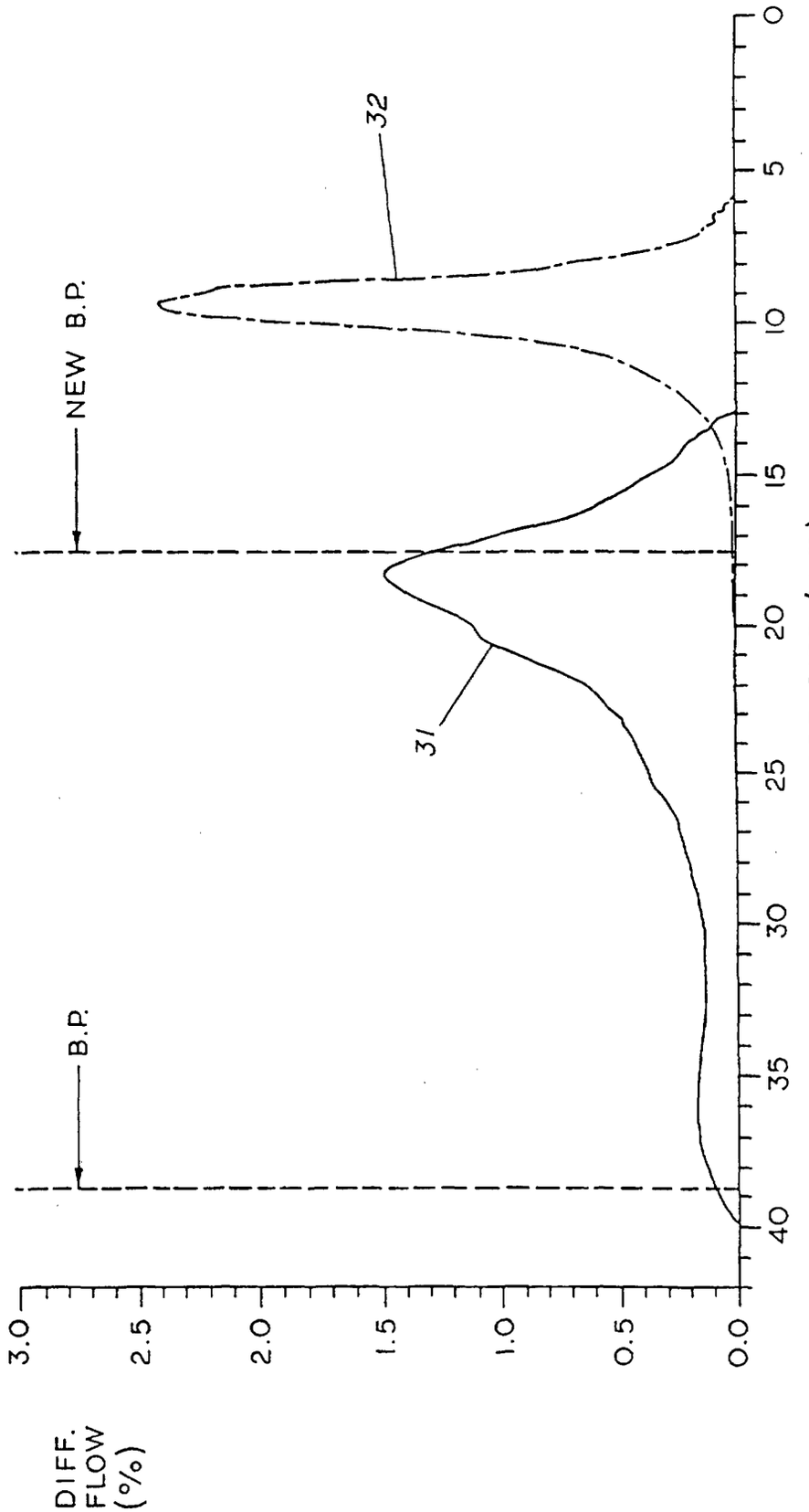
DIFF. FLOW (%)
3.0
2.5
2.0
1.5
1.0
0.5
0.0
B.P.
NEW B.P.
31
32
0
5
10
15
20
25
30
35
40
PORE SIZE (μm)

FIG. 7

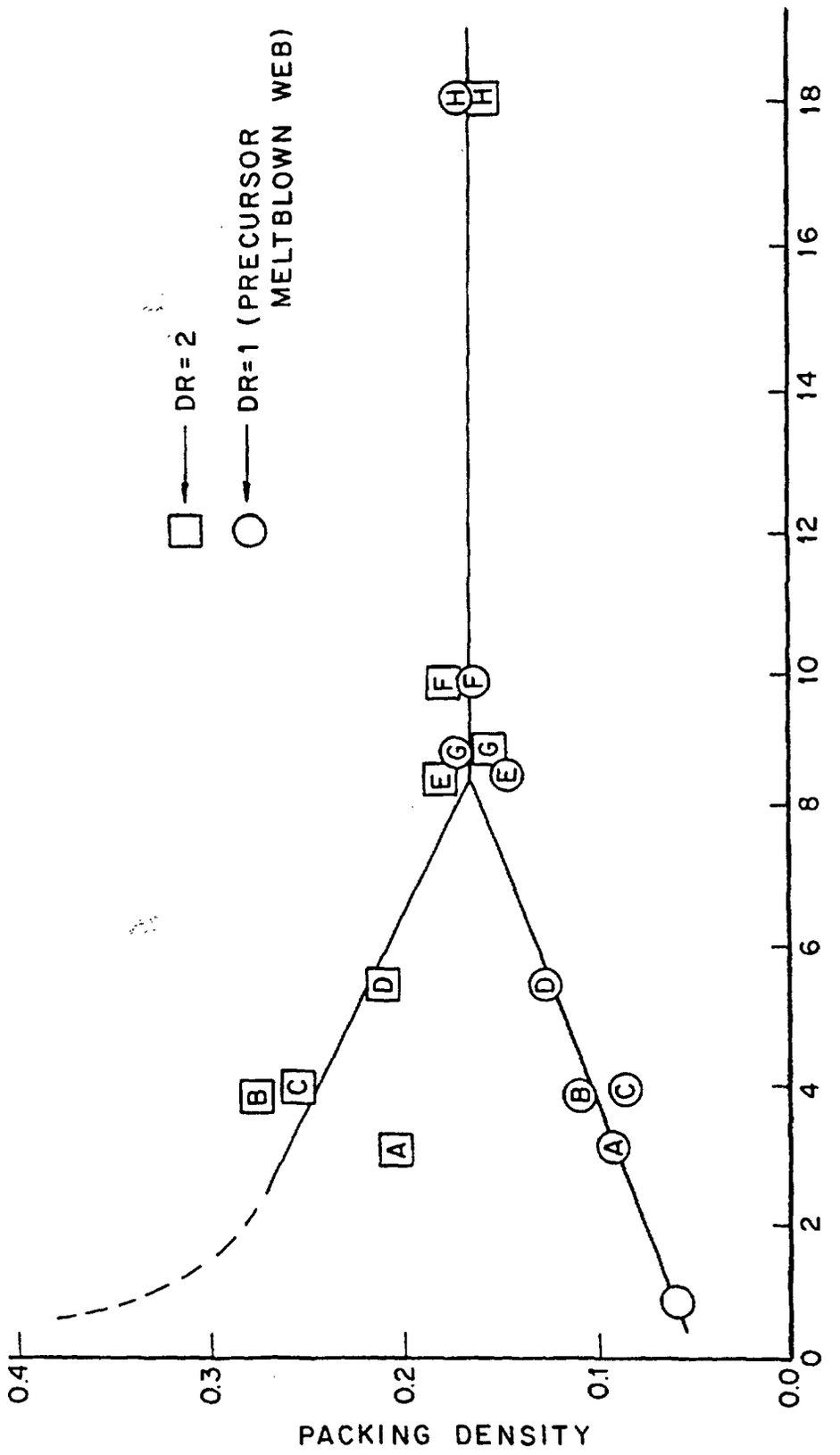
DR=2
DR=1 (PRECURSOR MELTBLOWN WEB)
PACKING DENSITY
0.4
0.3
0.2
0.1
0.0
WEB AVERAGE FIBER DIAMETER, MICRONS
0
2
4
6
8
10
12
14
16
18
A
B
C
D
E
F
G
H

Fig. 8

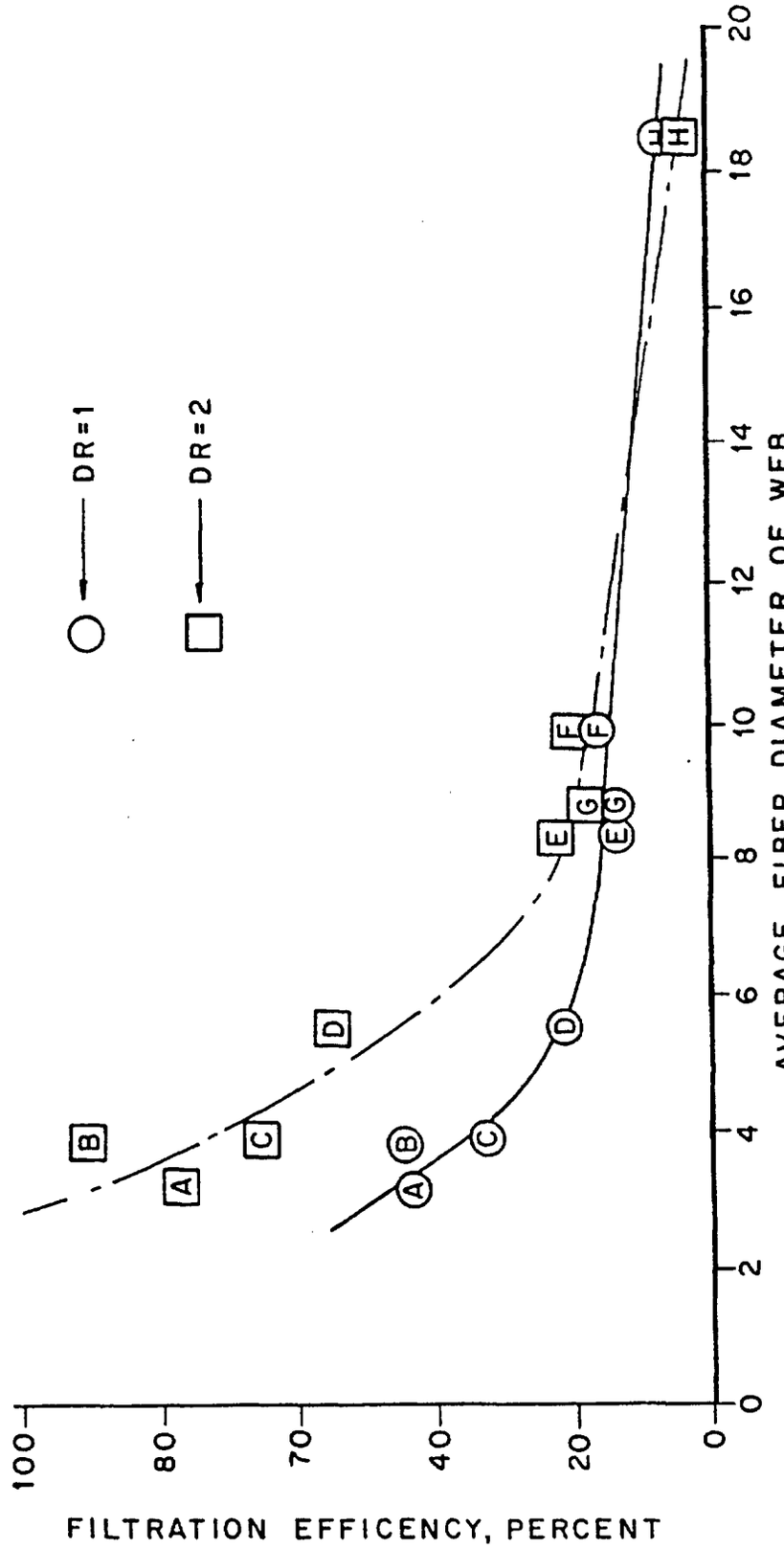
DR=1
DR=2
FILTRATION EFFICENCY, PERCENT
100
80
70
40
20
0
AVERAGE FIBER DIAMETER OF WEB
0
2
4
6
8
10
12
14
16
18
20
A
B
C
D
E
F
G
H

Fig. 9