(19) Europäisches Patentamt
European Patent Office
Office européen des brevets

(11) EP 1 055 297 B1

(12) **EUROPEAN PATENT SPECIFICATION**

(45) Date of publication and mention of the grant of the patent:
02.07.2003 Bulletin 2003/27

(21) Application number: **99959998.8**

(22) Date of filing: **17.12.1999**

(51) Int Cl.[7]: **H04Q 7/38**, H04B 1/707

(86) International application number:
PCT/KR99/00786

(87) International publication number:
WO 00/036767 (22.06.2000 Gazette 2000/25)

(54) **DEVICE AND METHOD FOR LOCATING A MOBILE STATION IN A MOBILE COMMUNICATION SYSTEM**

GERÄT UND VERFAHREN ZUR ORTSBESTIMMUNG EINER MOBILEN STATION IN EINER MOBILEN KOMMUNIKATIONSANORDNUNG

DISPOSITIF ET PROCEDE DE LOCALISATION D'UNE STATION MOBILE DANS UN SYSTEME DE COMMUNICATION MOBILE

(84) Designated Contracting States:
DE FI FR GB IT SE

(30) Priority: **17.12.1998 KR 9855907**

(43) Date of publication of application:
29.11.2000 Bulletin 2000/48

(73) Proprietor: **Samsung Electronics Co., Ltd.**
Suwon City, Kyungki-do 442-370 (KR)

(72) Inventor: **KONG, Seung-Hyun**
c/o SAMSUNG ELECTRONICS CO., LTD.
Sungnam-shi, Kyunggi-do (KR)

(74) Representative: **Grünecker, Kinkeldey, Stockmair & Schwanhäusser Anwaltssozietät**
Maximilianstrasse 58
80538 München (DE)

(56) References cited:
WO-A-98/32297 **US-A- 5 592 180**

Note: Within nine months from the publication of the mention of the grant of the European patent, any person may give notice to the European Patent Office of opposition to the European patent granted. Notice of opposition shall be filed in a written reasoned statement. It shall not be deemed to have been filed until the opposition fee has been paid. (Art. 99(1) European Patent Convention).

EP 1 055 297 B1

Printed by Jouve, 75001 PARIS (FR)

Description

BACKGROUND OF THE INVENTION

1. Field of the Invention

[0001] The present invention relates generally to the field of wireless communications, and in particular, to a receiving device and method in a base station (BS), for locating a mobile station (MS).

2. Description of the Related Art

[0002] The FCC (Federal Communication Committee) of the U.S. provides that an MS locating service should be implemented for emergency 911 (E911) public safety services. The FCC requires that wireless carriers be able to locate an E-911 caller with an accuracy of 125 meters in 67% of the cases by October, 2001. Therefore, the CDMA (Code Division Multiple Access) standard (TIA/EIA/IS-95) as well as the IMT-2000 (International Mobile Telecommunication-2000) system makes efforts to provide the MS locating service with use of a reverse link function called "PUF (Power Up Function)". The PUF is an MS locating scheme in which an MS in an emergency situation transmits probes with gradually increased power to a plurality of adjacent BSs on a reverse channel to inform them of its position so that each of the BSs can calculate the distance between the BS and the MS by estimating the time taken for the signal to reach the BS. The PUF is provided in IS-95B. However, the PUF of IS-958 may decrease system performance since an MS increases its transmit power on its own decision. That is, the increased transmit power of the specific MS creates interference with other MSs. Then, a BS continuously performs power control to reduce the transmit power of the specific MS, thereby increasing system load. Therefore, there exists the need for a continuous positioning service which does not degrade system performance by increasing interference.

SUMMARY OF THE INVENTION

[0003] It is, therefore, an object of the present invention to provide an efficient BS receiving device and method for locating an MS.

[0004] It is another object to provide a device and method for locating an MS, which method does not degrade system performance by increasing interference.

[0005] It is another object of the present invention to provide a device and method for locating an MS from a reverse channel received from an MS in a BS using a CDMA communication system.

[0006] It is a further object of the present invention to provide a device and method for estimating the direction of an MS based on the incident angle of a reverse channel received from the MS in a BS of a mobile communication system.

[0007] It is still another object of the present invention to provide a device and method for locating an MS by estimating the direction of the MS based on the incident angle of a reverse channel received from the MS and measuring the distance between a BS and the MS based on a round trip delay in a BS of a mobile communication system.

[0008] The present invention provides an MS locating method which makes a continuous positioning service viable without causing the degraded system performance due to increased interference as observed in the PUF of IS-95B. The MS locating method according to the present invention is based on the principle that a BS measures the incident angle of a received MS signal via a reverse link channel and determines the relative direction of the MS with respect to the BS based on the measured incident angle.

BRIEF DESCRIPTION OF THE DRAWINGS

[0009] The above and other objects, features and advantages of the present invention will become more apparent from the following detailed description when taken in conjunction with the accompanying drawings in which:

FIG. 1 illustrates the incidence of a reverse channel from an MS in a BS;
FIG. 2 is a block diagram of a BS receiver which obtains the incidence angle of a reverse signal received from an MS for MS positioning according to a first embodiment of the present invention;
FIG. 3 is a block diagram of a BS receiver which obtains the incidence angle of a reverse signal received from an MS for MS positioning according to a second embodiment of the present invention;
FIG. 4 is a block diagram of a BS receiver which is similar to the BS receiver shown in FIG. 2, except that the controller does not provide information about the orthogonal code of the MS signal to the Fast Hadamard Transformers (FHTs), according to a third embodiment of the present invention; and
FIG. 5 is a block diagram of a BS receiver which is similar to the BS receiver shown in FIG. 3, except that the controller does not provide information about the orthogonal code of the MS signal to the Fast Hadamard Transformers (FHTs), according to a fourth embodiment of the present invention.

DETAILED DESCRIPTION OF THE PREFERRED EMBODIMENTS

[0010] Preferred embodiments of the present invention will be described hereinbelow with reference to the accompanying drawings. In the following description, well-known functions or constructions are not described in detail since they would obscure the invention in unnecessary detail.

[0011] The following description is conducted with the appreciation that the channel used to measure the direction of the MS relative to the BS is a reverse channel. The reverse channels include the reverse pilot channel, the reverse fundamental channel, the reverse supplemental channel, and the reverse control channel.

[0012] While two antennas configured based on the concept of an array antenna are used to receive the reverse channel signal in order to track the MS location in a BS according to the preferred embodiments of the present invention, they receive an incident signal without compensating for its phase, which incident signal is used to estimate the incident angle of the received signal based on the phase difference of a signal received through each antenna, as compared to the array antenna which increases the reception rate by compensating for the phase difference of an incident signal. Accordingly, the demodulator is simplified as compared to the conventional array antenna.

[0013] FIG. 1 illustrates the incident angles of a reverse channel signal received in a BS.

[0014] As an MS gets nearer to a BS, the MS is located more accurately in the preferred embodiments of the present invention, as shown in FIG. 1. When a reverse channel signal is transmitted from an MS located a specific distance away from a BS, the signal is scattered within a specific range around the MS because of reflecting and transmitting from and into objects near to the MS. In most cases, the scattering radius r(d) increases in direct proportion to the distance between the BS and MS. Assuming that the BS can accurately measure the incident angle of a reverse signal received from the MS, angles between BS measured directions and an actual MS direction are $\Delta\theta_1$, $\Delta\theta_2$, $\Delta\theta_3$, and the like. Hence, the measured direction error increases with the scattering radius r(d). If the specific direction error is kept lower than a certain value, then an actual locating error for the nearby MS is reduced. A maximum MS locating error is r(d) only if the RTD between an MS and a BS is accurately measured. Here, the reverse channel signal can be interpreted to mean all signals received from the MS to the BS.

[0015] FIG. 2 is a block diagram of a BS receiver which measures the incident angle of a reverse channel signal received from an MS in order to locate the MS in a mobile communication system according to a first embodiment of the present invention. As shown in FIG. 2, the BS has two antennas spaced from each other by less than a half of its receiving carrier signal wavelength to determine the direction of a reverse channel signal received from the MS. However, if the BS is sectorized and the beam width of a sector antenna is 180° or below, the distance between antennas does not need to be kept less the half wavelength. As the distance between antennas increases, the multipath fadings of received signals are increasingly different. Due to the resulting individual phase change, it is preferable to set two antennas apart from each other by a half wavelength.

[0016] Referring to FIG. 2, frequency downconverters 211 and 212 downconvert radio signals received from corresponding antennas to intermediate frequency (IF) signals, convert the IF signals to baseband signals, and convert the baseband signals to digital signals as chip sample data through sampling and quantization. This process should be performed on signals received through the two antennas in the same manner. Therefore, the frequency downconverters 211 and 212 should have the same performance. A snapshot device 216 snapshots the chip sample data output from the frequency downconverters 211 and 212 in data symbol units (data transmitted by the MS and not spread) and stores the snapshot signals under the control of a controller 215. The size of the stored chip sample data ranges from one symbol to a plurality of symbols. Channel demodulators 213 and 214 despread the outputs of the frequency downconverters 211 and 212 to thereby recover signals, and feed information about the symbol start, the Walsh code for the starting symbol, and the PN code of the specific reverse channel signal to the controller 215. Here, the channel demodulators 213 and 214 are typical rake receivers and function to combine signals despread in each finger, as used in a conventional BS. The controller 215 provides overall control to the BS. In the chip sample data obtained from the snapshotting, all MS signals directed to the BS are mixed. To detect the signal of a specific MS, the controller 215 transmits the short and long PN codes used in the channel demodulators 213 and 214 at the time of the snapshot, and the accurate phase (finger position) of the path component incident with the greatest reception strength or the earliest received path component obtained by a searcher to despreaders 217 and 218 for despreading chip sample data received from the snapshot device 216. The despreaders 217 and 218 are assigned to the same finger position for despreading at the same time. That is, the despreaders 217 and 218 despread the snapshot signals based on the PN code (long code/short code) and the finger position received from the controller 215. The signal of the MS, the direction of which is to be detected, is extracted in the above procedure. Fast Hadamard Transformers (FHTs) 220 and 221 perform the correlation of the outputs of the despreaders 217 and 218 by all Walsh codes which can be obtained by the Hardamard Transformation. Performing the correlation with the Walsh Code means that each orthogonal code and the output data from the despreaders 217 and 218 are multiplied and outputted. In another embodiment, the controller 215 transmits the length of orthogonal codes corresponding to the specific MS to the FHTs 220 and 221 since detecting out which code is used will carry the whole process by 20ms (frame size) at most. In this case, the FHTs 220 and 221 Hadamard-transform all orthogonal codes of the transmitted length. Otherwise, the controller 215 can provide the orthogonal code corresponding to the specfic MS with the HFTs 220 and 221, but in this case, the process-

ing rate of the controller 215 is deteriorated to thereby increase the time taken for tracing the position of the MS. A combiner 222 sums up the Hadamard-transformed data received from the FHTs 220 and 221. A symbol decider 223 estimates actual MS symbol data from the output of the combiner 222. Selectors 224 and 225 selectively output data received from the FHTs 220 and 221 at the symbol estimating time of the symbol decider 223. The snapshot device 216, , the despreaders 217 and 218, the FHTs 220 and 221, the combiner 222, the symbol decider 223 and the selectors 224 and 225 can be defined as a construction of the symbol data extractors for extracting the symbol from the chip sample data. That is, the symbol data extractor can extract the symbol data from respective chip sample data by finger position information and the PN code determined by two chip sample data. At this time, the PN code and the finger position information is determined corresponding to the specific MS by the channel demodulators 213 and 214, and the controller 215.

[0017] Phase extractors 226 and 227 extract phase information of the symbol data from the outputs of the selectors 224 and 225. A subtracter 228 calculates the difference between the phase information received from the phase extractors 226 and 227. A filter 229 filters the output of the subtracter 228 to thereby estimate the final reception incident angle of a specific MS. Since $\phi 1$-$\phi 2$, the phase difference, directly implies the relative travel delay of the received signal at two spaced antennas, the filter 229 outputs a key estimation parameter for θ. Here, the filter is a moving average filter for continuously producing an average value over a predetermined period or an estimation filter. The phase extractors 226 and 227, the substractor 228 and the filter 229 can be defined as the incident angle estimator for extracting the phase difference between the symbol data extracted by the symbol data extractor and for estimating the incident angle of the received signal determined by the extracted phase difference. The position estimator (not shown) can estimate by the incident angle of the received signal from the specific MS calculated as above. The position estimator measures the distance between the BS and the MS based on an RTD, and then determines the final position of the MS based on the direction and the distance. At this time, the position estimator is not shown, but can be embodied by the controller 215 shown in the figure or using a separate processor.

[0018] As described above, the snapshot-based MS locating method according to the present invention is advantageous in that the location of any MS can be determined from snapshot data. To do so, the controller 215 extracts the signals of an MS by feeding the PN codes (long codes/short codes) and finger positions of the MS which is transmitting a reverse channel signals to the BS to the despreaders 217 and 218 during the snapshotting. Then, the controller 215 calculates a reception incident angle from the phase difference between the two extracted signals, for use in MS positioning.

[0019] FIG. 3 is a block diagram of a BS receiver for obtaining an incident angle of a reverse channel signal received from an MS in order to locate the MS in a mobile communication system according to a second embodiment of the present invention. In the second embodiment, the MS location is determined without snapshotting received chip sample data so that the incident angle of a reverse channel signal can be measured faster than in the first embodiment shown in FIG. 2.

[0020] Referring to FIG. 3, frequency downconverters 311 and 312 downconvert radio signals received from corresponding antennas to intermediate frequency (IF) signals, convert the IF signals to baseband signals, and convert the baseband signals to digital signals through sampling and quantization. This process should be performed on signals received through the two antennas in the same manner. Therefore, the frequency downconverters 311 and 312 should have the same performance. Channel demodulators 313 and 314 despread the outputs of the frequency downconverters 311 and 312 to thereby recover signals and feed information about the symbol time, the Walsh code for the starting symbol, and the PN code of the signal transmitted by a specific MS to a controller 315. Here, the channel demodulators 313 and 314 are typical rake receivers and function to combine signals despread in each finger, as used in a conventional BS. The controller 315 provides overall control to the BS. To detect a signal of a specific MS, the controller 315 transmits the short and long PN codes used in the channel demodulators 313 and 314, and the phase (finger position) of the path component incident with the greatest reception strength or the earliest received path component obtained by a searcher to despreaders 316 and 317. The despreaders 317 and 318 despread the signals received from the frequency downconverters 311 and 312 based on the PN code (long code/short code) and the finger position received from the controller 315. Here, the despreading is performed using the same finger position in the despreaders 316 and 317. The signal of the MS the direction of which is to be detected is extracted in the above procedure. FHTs 318 and 319 performs the despreading of the outputs of the despreaders 136 and 317 by all Walsh codes which can be obtained by the Hadamard Transformation. In other hand, it will be understood by those skilled in the art that a second embodiment can be embodied in the same manner as the type of providing the orthogonal code length or the orthogonal code by the controller 315 in the first embodiment. A combiner 320 sums up the Hadamard-transformed data received from the FHTs 318 and 319. A symbol decider 321 estimates actual MS symbol data from the output of the combiner 320. Selectors 322 and 323 selectively output data received from the FHTs 318 and 319 at the symbol data estimating time. Phase extractors 324 and 325 extract phase information of symbol data from the outputs of the selectors 322 and 323. A subtracter 326 calculates the dif-

ference between the phase information received from the phase extractors 324 and 325. A filter 327 filters the output of the subtracter 326 to thereby produce an estimation parameter (E[ϕ1-ϕ2]) at the final reception incident angle of a specific MS. Here, the filter is a moving average filter for continuously producing an average value over a predetermined period or an estimation filter. The direction of the MS can be estimated from the incident angle of the MS signal. The controller 315 measures the distance between the BS and the MS based on an RTD, and then determines the final position of the MS based on the direction and the distance.

[0021] In accordance with the second embodiment, the controller can afford to provide PN code (long code/short code) information and finger position to the despreaders only when a received MS signal has a constant finger position (i.e., path) even for a short time, because the received chip sample data is not snapshot. It can be assumed that an MS signal has a constant finger position if the path of a reverse channel signal is not changed much, an MS is in a line-of-sight path, or a despreading time (or a processing time) is very short. That is, the structure of FIG. 3 can estimate a signal incident angle for one MS. However, parallel processing from the despreaders to the filter enables estimation of the incident angles of reverse signals received from a plurality of MSs at one time.

[0022] FIG. 4 is a block diagram of a BS receiver for obtaining the incident angle of a reverse channel signal received from a specific MS in a mobile communication system according to a third embodiment of the present invention. The BS receiver shown in FIG. 4 is the same as that shown in FIG. 2 in configuration except that a controller 415 does not feed an orthogonal code length to FHTs 420 and 421. Thus, the FHTs 420 and 421 correlate then input signal to all orthogonal codes of all length. If the FHTs 420 and 421 can receive the orthogonal code length from the controller 415 as in FIG. 2, Hadamard transformation can be performed more efficiently than correlation to all the orthogonal codes of all length. A phase difference is calculated between two signals detected from the Hadamard transformation, and then the incident angle of the reverse channel signal is estimated based on the phase difference.

[0023] FIG. 5 is a block diagram of a BS receiver for obtaining the incident angle of a reverse channel signal received from a specific MS in a mobile communication system according to a fourth embodiment of the present invention. The BS receiver shown in FIG. 5 is the same in configuration as that shown in FIG. 3 except that a controller 515 does not feed an orthogonal code length to FHTs 519 and 520. Thus, the FHTs 519 and 520 correlate the input signal to all orthogonal codes. If the FHTs 519 and 520 can receive the orthogonal code length from the controller 515 as one of the previous embodiment, Hadamard transformation can be performed more efficiently than correlation to all the orthogonal codes. A phase difference is calculated between two signals detected from the Hadamard transformation, and then the incident angle of the reverse channel signal is estimated based on the phase difference.

[0024] As described above, the preferred embodiments of the present invention can determine the locations of all MSs without changing conventional physical layers. The conventional PUF increases interference between MSs, but according to the preferred embodiments of the present invention, a BS can more efficiently locate an MS using a reverse signal received from the MS without the need for any specific action of the MS.

[0025] While the invention has been shown and described with reference to certain preferred embodiments thereof, it will be understood by those skilled in the art that various changes in form and details may be made therein without departing from the spirit and scope of the invention as defined by the appended claims.

Claims

1. A mobile station (MS) locating device for a base station (BS) in a mobile communication system, comprising:

   a first antenna and a second antenna spaced from each other by a distance equivalent to a wavelength of an MS transmission channel multiplied by a predetermined coefficient;
   a frequency downconverter (211,212;311,312; 411,412;511,512) for converting signals received from the first and second antennas to baseband signals and digitizing the base band signals to a first and second chip sample data;
   a symbol data extractor (217,218, 220,222,223, 224225;316 to 323; 416,417, 418 to 425;516,517,519 - 524) for extracting two symbols from the first and second chip sample data based on a PN code and finger position information corresponding to the specific MS determined by the first and second chip sample data;
   an incident angle estimator (226,227,228,229; 324,325,326,327;426,427,428,429; 525,526,527,528) for estimating an incident angle of the received signal from the phase difference between the extracted two symbols; and
   a location estimator (215,315,415,515) for estimating a location of the specific MS based on the estimated incident angle and a round trip delay (RTD) measured for the MS.

2. The MS locating device of claim 1, **characterised in that** a first and second chip sample data received from the frequency downconverter are additionally based on orthogonal code length.

3. The MS locating device of claims 1 or 2, **character-**

ised in that the predetermined coefficient is one half.

4. The MS locating device of claims 1 or 2, wherein the incident angle estimator comprises;
a phase extractor (226,227;324,325;426,427; 525,526) for extracting phases of the extracted two symbols;
a subtracter (228,326,428,527) for calculating a phase difference between the two phases; and
a filter (229,327,429,528) for filtering the phase difference and estimating the incident angle of the MS signal.

5. The MS locating device of claim 1, wherein the symbol data extractor comprises:

a despreader (417,418,516,517) for despreading the first and second chip sample data with the PN code at a time point determined by the finger position information;
a fast Hadamard Transformer (FHT) (420,421; 519,520) for despreading the output of the despreader with all orthogonal codes generated by Hadamard transformation;
a combiner (422,521) for summing up two despread signals received from the FHTs;
a symbol decider (423,522) for generating a symbol data estimating time from an output of the combiner; and
a selector (424,425;523,524) for extracting symbol data at the symbol data estimating time from the despread signal received from the FHT.

6. The MS locating device of claim 2, wherein the symbol data extractor comprises:

a despreader (217,218;316,317) for despreading first and second chip sample data with the PN code at a time point determined by the finger position information;
a Fast Hadamard Transformer (FHT) (220,221,318,319) for despreading the output of the despreader with all orthogonal codes of the orthogonal code length;
a combiner (222,320) for summing up two despread signals received from the FHTs;
a symbol decider (223,321) for generating the symbol data estimating time from an output of the combiner; and
a selector (224,225;322,323) for extracting symbol data at he symbol data estimating time form the despread signal received from the FHT.

7. The MS locating device of claims 5 or 6, **characterised in that** the symbol data extractor further comprises a snapshot device (216,416) for storing the first and second chip sample data received from the frequency downconverter in symbol data units and outputting the stored chip sample data to the despreaders (217,218;417,418).

8. An MS locating method in a mobile communication systems, comprising the steps of:

converting the received signals to baseband signals through a first antenna and a second antenna spaced from each other by a distance equivalent to a wavelength of an MS transmission channel multiplied by a predetermined coefficient, and digitizing the baseband signals to first and second chip sample data;
extracting first and second symbols from the first and second chip sample data based on a PN code and finger position information corresponding to the specific MS determined by the first and second chip sample data;
estimating the incident angle of the received signals from a phase difference between the extracted two symbols; and
estimating the location of the specific MS based on the estimated incident angle and a round trip delay (RTD) measured for the MS.

9. The MS locating method of claim 8, **characterised in that** the first and second chip sample data are additionally based on orthogonal code length.

10. The MS locating method of claims 8 or 9, **characterised in that** the predetermined coefficient is one half.

11. The MS locating method of claims 8 or 9, **characterised in that** the incident angle estimating step comprises the steps of:

extracting phases of the extracted two symbols;
calculating a phase difference between the two phases; and
filtering the phase difference and estimating the incident angle of the MS signals.

12. The MS locating method of claim 11, **characterised in that** the symbol data extracting step comprises the steps of:

despreading the first and second chip sample data with the PN code at a time point determined by the finger position information;
despreading the first and second PN-despread signals with orthogonal codes generated by Hadamard transformation;
summing up the orthogonally despread signals;
generating a symbol data estimating time from

the sum; and
extracting first and second symbol data at the symbol data estimating time from the orthogonally despread signals.

13. The MS locating method of claim 11, wherein the symbol data extracting step comprises the steps of:

despreading the first and second chip sample data with the PN code at a time point determined by the finger position information;
despreading the first and second PN-despread signals with all orthogonal codes of the orthogonal code length;
summing up the orthogonally despread signals;
generating a symbol data estimating time from the sum; and
extracting the first and second symbols at the symbol data estimating time from the orthogonally despread signals.

14. The MS locating method of claims 12 or 13, wherein the symbol data extracting step further comprises the step of storing the first and second chip sample data in symbol data units and outputting the stored chip sample data for the PN-despreading.

Patentansprüche

1. Lokalisierungsvorrichtung zur Ortsbestimmung einer mobilen Station (MS) für eine Basisstation (BS) in einem Mobilkommunikationssystem, welche Vorrichtung aufweist:

eine erste und eine zweite Antenne, welche zueinander in einem Abstand äquivalent zu einer Wellenlänge eines MS-Übertragungskanals multipliziert mit einem vorbestimmten Koeffizienten angeordnet sind;

einem Frequenzherabsetzer (211, 212; 311, 312; 411, 412; 511, 512) zur Konvertierung der von den ersten und zweiten Antennen empfangenen Signale in Basisbandsignale und zur Digitalisierung der Basisbandsignale in erste und zweite Chipabtastdaten;

einen Symboldatenextrahierer (217, 218, 220, 222, 223, 224, 225; 316-323; 416, 417, 418-425; 516, 517, 519-524) zum Extrahieren zweier Symbole aus den ersten und zweiten Chipabtastdaten basierend auf einem PN-Code und Fingerpositionsinformationen korrespondierend zum spezifischen MS bestimmt durch die ersten und zweiten Chipabtastdaten;

eine Einfallswinkelschätzeinrichtung (226, 227, 228, 229; 325, 326, 327; 426, 427, 428, 429; 525, 526, 527, 528) zum Schätzen eines Einfallswinkels des empfangenen Signals aus der Phasendifferenz zwischen den extrahierten zwei Symbolen, und

eine Ortschätzeinrichtung (215, 315, 415, 515) zum Schätzen eines Orts des spezifischen MS basierend auf dem geschätzten Einfallswinkel und einer für die MS gemessenen Hin- und Hersendeverzögerung (RTD).

2. Lokalisierungsvorrichtung nach Anspruch 1,
dadurch gekennzeichnet,
dass die ersten und zweiten, vom Frequenzherabsetzer empfangenen Chipabtastdaten zusätzlich auf einer orthogonalen Codelänge basieren.

3. Lokalisierungsvorrichtung nach Ansprüchen 1 und 2,
dadurch gekennzeichnet,
dass der vorbestimmte Koeffizient ½ ist.

4. Lokalisierungsvorrichtung nach Ansprüchen 1 oder 2, wobei die Einfallswinkelschätzeinrichtung aufweist:

einen Phasenextrahierer (226, 227; 324, 325; 426, 427; 525, 526) zum Extrahieren der Phasen der extrahierten zwei Symbole;

einen Subtrahierer (228, 326, 428, 527) zur Berechnung einer Phasendifferenz zwischen den zwei Phasen, und

ein Filter (229, 327, 429, 528) zum Filtern der Phasendifferenz und Schätzen des Einfallswinkels des MS-Signals.

5. Lokalisierungsvorrichtung nach Anspruch 1, wobei der Symboldatenextrahierer aufweist:

einen Despreader (217, 218; 316, 317) zum Entspreizen der ersten und zweiten Chipabtastdaten mit dem PN-Code zu einem durch die Fingerpositionsinformation bestimmten Zeitpunkt;

einen schnellen Hadamard-Transformer (FHT) (420, 421; 519, 520) zum Entspreizen des Ausgangs des Despreaders mit allen durch Hadamard-Transformation erzeugten orthogonalen Codes;

einen Combiner (422, 421) zum Aufsummieren der zwei entspreizten, vom FHT empfangenen Signale;

eine Symbolentscheidungseinrichtung (423, 522) zur Erzeugung einer Symboldatenschätzzeit aus der Ausgabe des Combiners, und

eine Selektionseinrichtung (424, 425; 523, 424) zum Extrahieren von Symboldaten zur Symboldatenschätzzeit aus dem vom FHT empfangenen entspreizten Signal.

6. MS-Lokalisierungsvorrichtung nach Anspruch 2, wobei die Symboldatenextrahiereinrichtung aufweist:

einen Despreader (217, 218; 316, 317) zum Entspreizen der ersten und zweiten Chipabtastdaten mit dem PN-Code zu einem durch die Fingerpositionsinformation bestimmten Zeitpunkt;

einen schnellen Hadamard-Transformer (FHD) (220, 221, 318, 319) zum Entspreizen der Ausgabe des Despreaders mit allen orthogonalen Codes der orthogonalen Codelänge;

einen Combiner (222, 320) zum Aufsummieren der entspreizten, vom FHT empfangenen Signale;

eine Symbolentscheidungseinrichtung (223, 321) zum Erzeugen der Symboldatenschätzzeit aus der Ausgabe des Combiners, und

eine Auswahleinrichtung (224, 225; 322, 323) zum Extrahieren von Symboldaten bei der Symboldatenschätzzeit aus dem vom FHT empfangenen entspreizten Signal.

7. Lokalisierungsvorrichtung nach Ansprüchen 5 oder 6,
dadurch gekennzeichnet,
dass die Symboldatenextrahiereinrichtung weiterhin eine Schnappschusseinrichtung (216, 416) zum Speichern der ersten und zweiten Chipabtastdaten aufweist, welche von dem Frequenzherabsetzer in Symboldateneinheiten empfangen werden, und zur Ausgabe der gespeicherten Chipabtastdaten an die Despreader (217, 218; 417, 418).

8. Ein MS-Lokalisierungsverfahren in einem Mobilkommunikationssystem mit den folgenden Schritten:

Umwandeln der durch eine erste Antenne und eine zweite Antenne empfangenen Signale in Basisbandsignale, welche Antennen voneinander in einer Entfernung äquivalent zu einer Wellenlänge eines MS-Übertragungskanals multipliziert mit einem vorbestimmten Koeffizienten beabstandet sind, und Digitalisieren der Basisbandsignale in erste und zweite Chipabtastdaten;

Extrahieren erster und zweiter Symbole aus den ersten und zweiten Chipabtastdaten basierend auf einem PN-Code und einer Fingerpositionsinformation entsprechend der spezifischen MS und festgelegt durch die ersten und zweiten Chipabtastdaten;

Abschätzen des Einfallswinkels der empfangenen Signale aus der Phasendifferenz zwischen den extrahierten zwei Symbolen, und

Abschätzen der Position der spezifischen MS auf der Grundlage des abgeschätzten Einfallswinkels und einer für die MS gemessenen Hin- und Herlaufverzögerung (RTD).

9. MS-Lokalisierungsverfahren nach Anspruch 8,
dadurch gekennzeichnet,
dass die ersten und zweiten Chipauswahldaten zusätzlich auf einer orthogonal-Codelänge basieren.

10. MS-Lokalisierungsverfahren nach Ansprüchen 8 oder 9,
dadurch gekennzeichnet,
dass der vorbestimmte Koeffizient ½ ist.

11. MS-Lokalisierungsverfahren nach Ansprüchen 8 oder 9,
dadurch gekennzeichnet,
dass der Einfallswinkelabschätzschritt die folgenden Schritte umfasst:

Extrahieren von Phasen der extrahierten zwei Symbole;

Berechnen einer Phasendifferenz zwischen den zwei Phasen, und

Filtern der Phasendifferenz und Abschätzen des Einfallswinkels der MS-Signale.

12. MS-Lokalisierungsverfahren nach Anspruch 11,
dadurch gekennzeichnet,
dass der Symboldatenextrahierschritt die folgenden Schritte umfasst:

Entspreizen der ersten und zweiten Chipabtastdaten mit dem PN-Code zu einem durch die Fingerpositionsinformation bestimmten Zeitpunkt;

Entspreizen der ersten und zweiten PN-entspreizten Signale mit durch Hadamard-Transformation erzeugten orthogonalen Codes;

Aufsummieren der orthogonal entspreizten Signale;

Erzeugen einer Symboldatenschätzzeit aus der Summe, und

Extrahieren erster und zweiter Symboldaten zum Symboldatenschätzzeitpunkt aus den orthogonal entspreizten Signalen.

13. MS-Lokalisierungsverfahren nach Anspruch 11, wobei der Symboldatenextrahierschritt die folgenden Schritte umfasst:

Entspreizen der ersten und zweiten Chipabtastdaten mit dem PN-Code zu einem durch die Fingerpositionsinformation bestimmten Zeitpunkt;

Entspreizen der ersten und zweiten PN-entspreizten Signale mit allen orthogonalen Codes von orthogonaler Codelänge;

Aufsummieren der orthogonal entspreizten Signale;

Erzeugen einer Symboldatenschätzzeit aus der Summe, und

Extrahieren der ersten und zweiten Symbole zur Symboldatenschätzzeit aus den orthogonal entspreizten Signalen.

14. MS-Lokalisierungsverfahren nach Ansprüchen 12 oder 13, wobei der Symboldatenextrahierschritt weiterhin den Schritt des Speichems der ersten und zweiten Chipabtastdaten in Symboldateneinheiten und Ausgabe der gespeicherten Chipabtastdaten zum PN-Entspreizen umfasst.

Revendications

1. Dispositif de localisation d'une station mobile (SM) pour une station de base (SB) dans un système de communication mobile comprenant :

une première antenne et une deuxième antenne espacées l'une par rapport à l'autre par une distance équivalant à une longueur d'onde d'un canal de transmission SM multipliée par un coefficient prédéterminé ;
un changeur abaisseur de fréquence (211, 212; 311, 312; 411, 412; 511, 512) pour la conversion des signaux reçus des première et deuxième antennes en signaux en bande de base et pour la numérisation des signaux en bande de base en une première et deuxième données d'échantillonnage de bribe ;
un extracteur de données symboliques (217, 218, 220, 222, 223, 224, 225; 316 à 323; 416, 417, 418 à 425; 516, 517, 519 à 524) pour l'extraction de deux symboles des première et deuxième données d'échantillonnage de bribe basée sur un code PN et une information de position de doigt correspondant à la SM spécifique déterminée par les première et deuxième données d'échantillonnage de bribe ;
un estimateur d'angle incident (226, 227, 228, 229; 324, 325, 326, 327; 426, 427, 428, 429; 525, 526, 527, 528) pour l'estimation de l'angle incident du signal reçu à partir de la différence de phase entre les deux symboles extraits ; et
un estimateur de position (215, 315, 415, 515) pour l'estimation d'une position de la SM spécifique basée sur l'angle incident estimé et sur un temps de propagation aller et retour (RTD) mesuré pour la SM.

2. Dispositif de localisation d'une SM selon la revendication 1, **caractérisé en ce qu'**une première et une deuxième données d'échantillonnage de bribe reçues du changeur abaisseur de fréquence sont additionnées sur la base d'une longueur de code orthogonal.

3. Dispositif de localisation d'une SM selon la revendication 2, **caractérisé en ce que** le coefficient prédéterminé est un demi.

4. Dispositif de localisation d'une SM selon la revendication 1 ou 2, dans lequel l'estimateur d'angle incident comprend :

un extracteur de phase (226, 227; 324, 325; 426, 427; 525, 526) pour l'extraction des phases des deux symboles extraits ;
un soustracteur (228, 326, 428, 527) pour le calcul d'une différence de phase entre les deux phases ; et
un filtre (229, 327, 429, 528) pour le filtrage de la différence de phase et l'estimation de l'angle incident du signal SM.

5. Dispositif de localisation d'une SM selon la revendication 1, dans lequel l'extracteur de données symboliques comprend :

un suppresseur d'étalement (417, 418; 516, 517) pour le désétalement des première et deuxième données d'échantillonnage de bribe avec le code PN à un point de temps déterminé par l'information de position du doigt ;
un transformateur de Hadamard rapide (THR) (420, 421; 519, 520) pour le désétalement de la sortie du suppresseur d'étalement avec tous

les codes orthogonaux générés par la transformation de Hadamard ;
un combinateur (422, 521) pour la sommation de deux signaux désétalés reçus du THR;
un décideur de symboles (423, 522) pour la génération d'un temps d'estimation des données symboliques à partir d'une sortie du combinateur ; et
un sélecteur (424, 425; 523, 524) pour l'extraction de données symboliques au temps d'estimation des données symboliques sur le signal désétalé reçu du THR.

6. Dispositif de localisation d'une SM selon la revendication 2, dans lequel l'extracteur de données symboliques comprend :

un suppresseur d'étalement (217, 218 ; 316, 317) pour le désétalement des première et deuxième données d'échantillonnage de bribe basé avec le code PN à un point de temps déterminé dans le temps par l'information de position du doigt ;
un transformateur de Hadamard rapide (THR) (220, 221; 318, 319) pour le désétalement de la sortie du suppresseur d'étalement avec tous les codes orthogonaux de la longueur de code orthogonal ;
un combinateur (222, 320) pour la sommation de deux signaux désétalés reçus des THR;
un décideur de symboles (223, 321) pour la génération d'un temps d'estimation des données symboliques à partir d'une sortie du combinateur ; et
un sélecteur (224, 225; 322, 323) pour l'extraction de données symboliques au temps d'estimation des données symboliques sur le signal désétalé reçu du THR.

7. Dispositif de localisation d'une SM selon les revendications 5 ou 6, **caractérisé en ce que** l'extracteur de données symboliques comprend un dispositif d'instantané (216, 416) pour l'enregistrement des première et deuxième données d'échantillonnage de bribe reçues du changeur abaisseur de fréquence dans des unités de données symboliques et pour la délivrance des données d'échantillonnage de bribe enregistrées aux suppresseurs d'étalement (217, 218; 417, 418).

8. Procédé de localisation d'une SM dans un système de communication mobile, comprenant les étapes :

de conversion des signaux reçus en signaux en bande de base par une première antenne et une deuxième antenne espacées l'une par rapport à l'autre par une distance équivalant à une longueur d'onde d'un canal de transmission SM multipliée par un coefficient prédéterminé, et de numérisation des signaux en bande de base en une première et deuxième données d'échantillonnage de bribe ;
d'extraction des premier et deuxième symboles sur les première et deuxième données d'échantillonnage de bribe sur la base d'un code PN et une information de position de doigt correspondant à la SM spécifique déterminée par les première et deuxième données d'échantillonnage de bribe ;
d'estimation de l'angle incident des signaux reçus à partir d'une différence de phase entre les deux symboles extraits ; et
d'estimation de la position de la SM spécifique basée sur l'angle incident estimé et sur un temps de propagation aller et retour (RTD) mesuré pour la SM.

9. Procédé de localisation d'une SM selon la revendication 8, **caractérisé en ce que** la première et la deuxième données d'échantillonnage de bribe sont additionnées sur la base d'une longueur de code orthogonal.

10. Procédé de localisation d'une SM selon les revendications 8 ou 9, **caractérisé en ce que** le coefficient prédéterminé est un demi.

11. Procédé de localisation d'une SM selon les revendications 8 ou 9, **caractérisé en ce que** l'étape d'estimation d'angle incident comprend les étapes :

d'extraction des phases des deux symboles extraits ;
de calcul d'une différence de phase entre les deux phases ; et
de filtrage de la différence de phase et d'estimation de l'angle incident des signaux SM.

12. Procédé de localisation d'une SM selon la revendication 11, **caractérisé en ce que** l'étape d'extraction des données symboliques comprend les étapes :

de désétalement des première et deuxième données d'échantillonnage de bribe avec le code PN à un point déterminé dans le temps par l'information de position du doigt ;
de désétalement des premier et deuxième signaux désétalés PN avec des codes orthogonaux générés par la transformation de Hadamard ;
de sommation des signaux désétalés orthogonalement ;
de génération d'un temps d'estimation des données symboliques à partir de la somme ; et
d'extraction des première et deuxième don-

nées symboliques au temps d'estimation des données symboliques sur les signaux désétalés orthogonalement.

13. Procédé de localisation d'une SM selon la revendication 11, dans lequel l'étape d'extraction des données symboliques comprend les étapes :

de désétalement des première et deuxième données d'échantillonnage de bribe avec le code PN à un point de temps déterminé par l'information de position du doigt ;
de désétalement des premier et deuxième signaux désétalés PN avec tous les codes orthogonaux de la longueur de code orthogonal ;
de sommation des signaux désétalés orthogonalement ;
de génération d'un temps d'estimation des données symboliques à partir de la somme ; et
d'extraction des premier et deuxième symboles au temps d'estimation des données symboliques sur les signaux désétalés orthogonalement.

14. Procédé de localisation d'une SM selon les revendications 12 ou 13, dans lequel l'étape d'extraction des données symboliques comprend de plus l'étape d'enregistrement des première et deuxième données d'échantillonnage de bribe dans des unités de données symboliques et de délivrance des données d'échantillonnage de bribe enregistrées pour le désétalement PN.

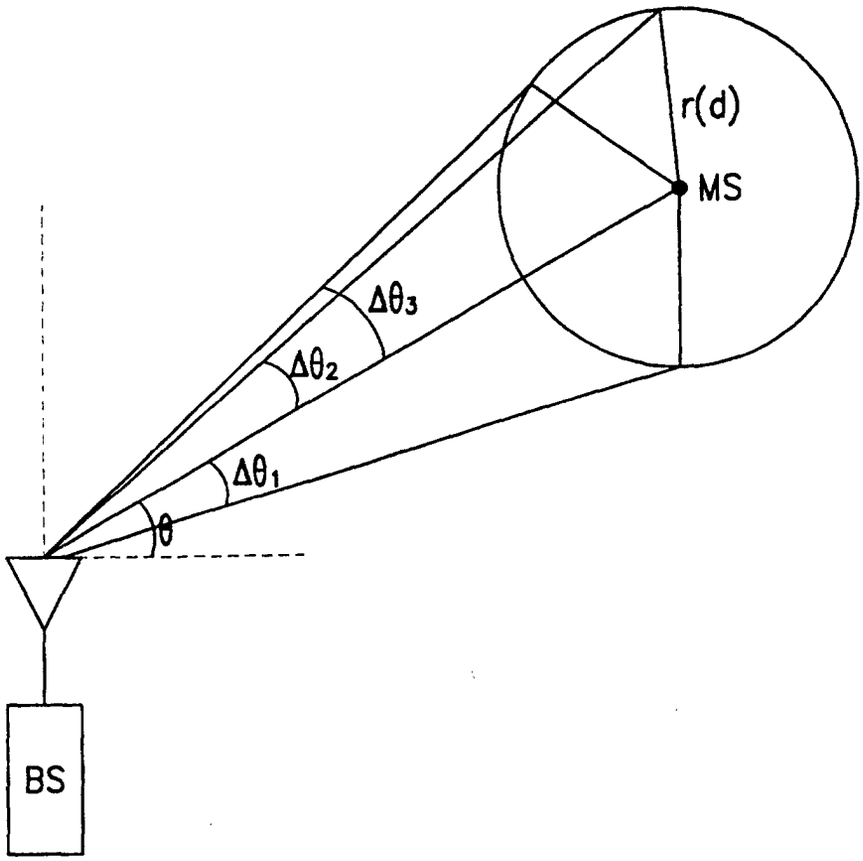

FIG. 1

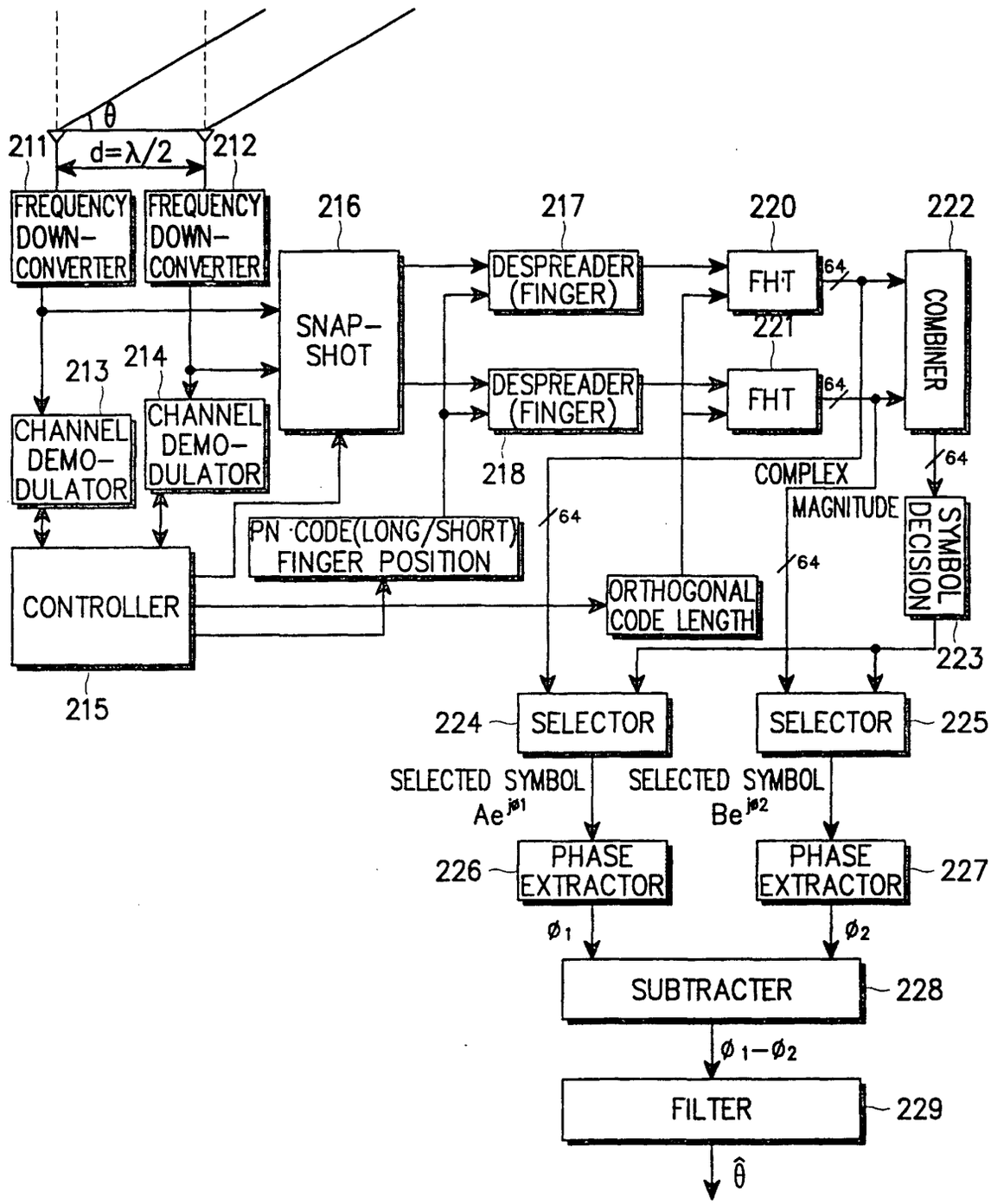
θ
211
d=λ/2
212
FREQUENCY DOWN-CONVERTER
FREQUENCY DOWN-CONVERTER
216
217
220
222
SNAP-SHOT
DESPREADER (FINGER)
FHT
64
COMBINER
221
213
214
DESPREADER (FINGER)
FHT
64
CHANNEL DEMO-DULATOR
CHANNEL DEMO-DULATOR
218
COMPLEX
MAGNITUDE
64
SYMBOL DECISION
PN CODE(LONG/SHORT) FINGER POSITION
64
CONTROLLER
ORTHOGONAL CODE LENGTH
223
215
224
SELECTOR
SELECTOR
225
SELECTED SYMBOL
Ae^jφ1
SELECTED SYMBOL
Be^jφ2
226
PHASE EXTRACTOR
PHASE EXTRACTOR
227
φ1
φ2
SUBTRACTER
228
φ1−φ2
FILTER
229
θ̂

FIG. 2

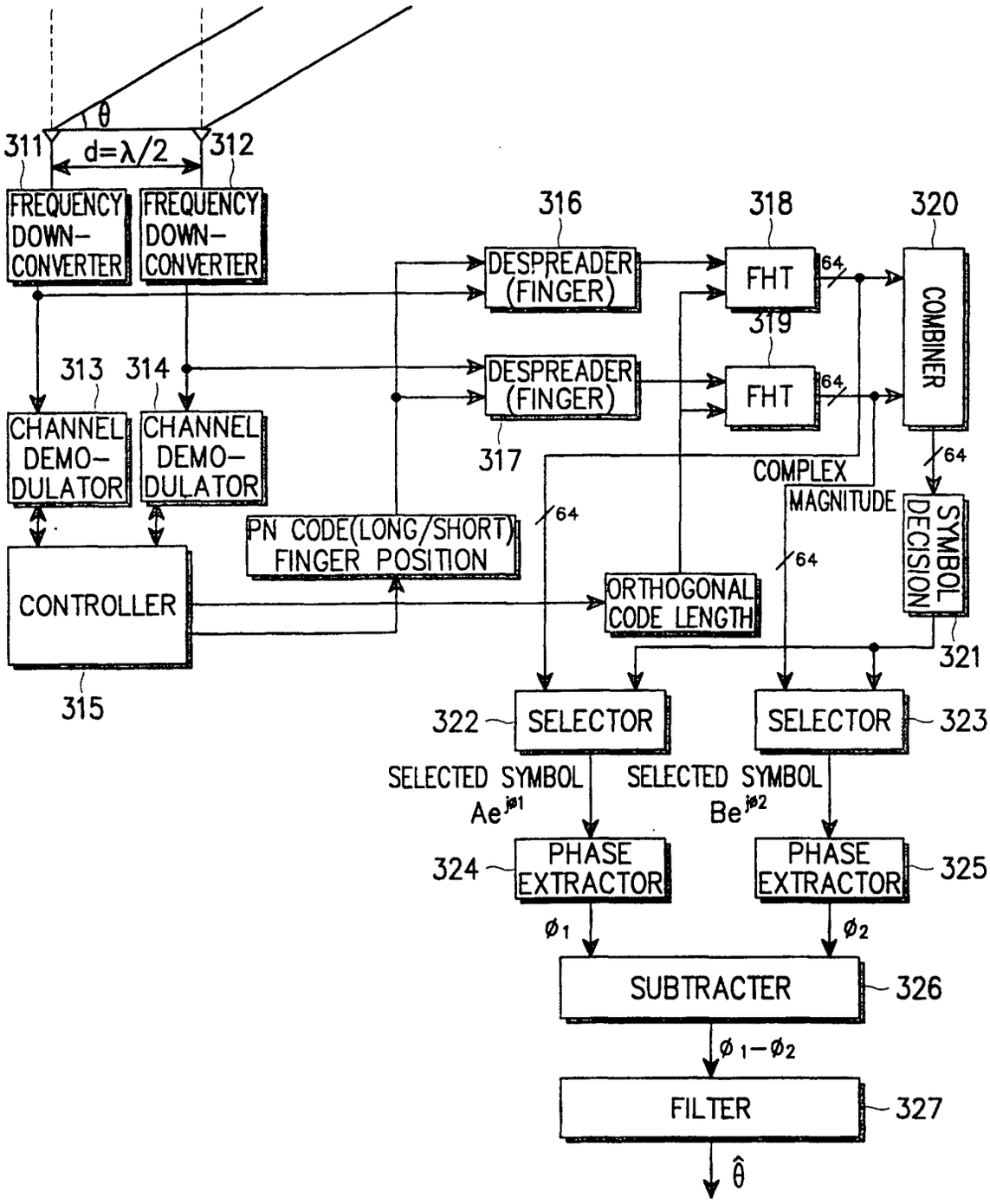
θ
311
d=λ/2
312
FREQUENCY DOWN-CONVERTER
FREQUENCY DOWN-CONVERTER
316
318
320
DESPREADER (FINGER)
FHT
64
COMBINER
319
313
314
DESPREADER (FINGER)
FHT
64
CHANNEL DEMO-DULATOR
CHANNEL DEMO-DULATOR
317
COMPLEX MAGNITUDE
64
SYMBOL DECISION
PN CODE(LONG/SHORT) FINGER POSITION
64
CONTROLLER
ORTHOGONAL CODE LENGTH
321
315
322
SELECTOR
SELECTOR
323
SELECTED SYMBOL
Ae^jφ1
SELECTED SYMBOL
Be^jφ2
324
PHASE EXTRACTOR
PHASE EXTRACTOR
325
φ1
φ2
SUBTRACTER
326
φ1−φ2
FILTER
327
θ̂

FIG. 3

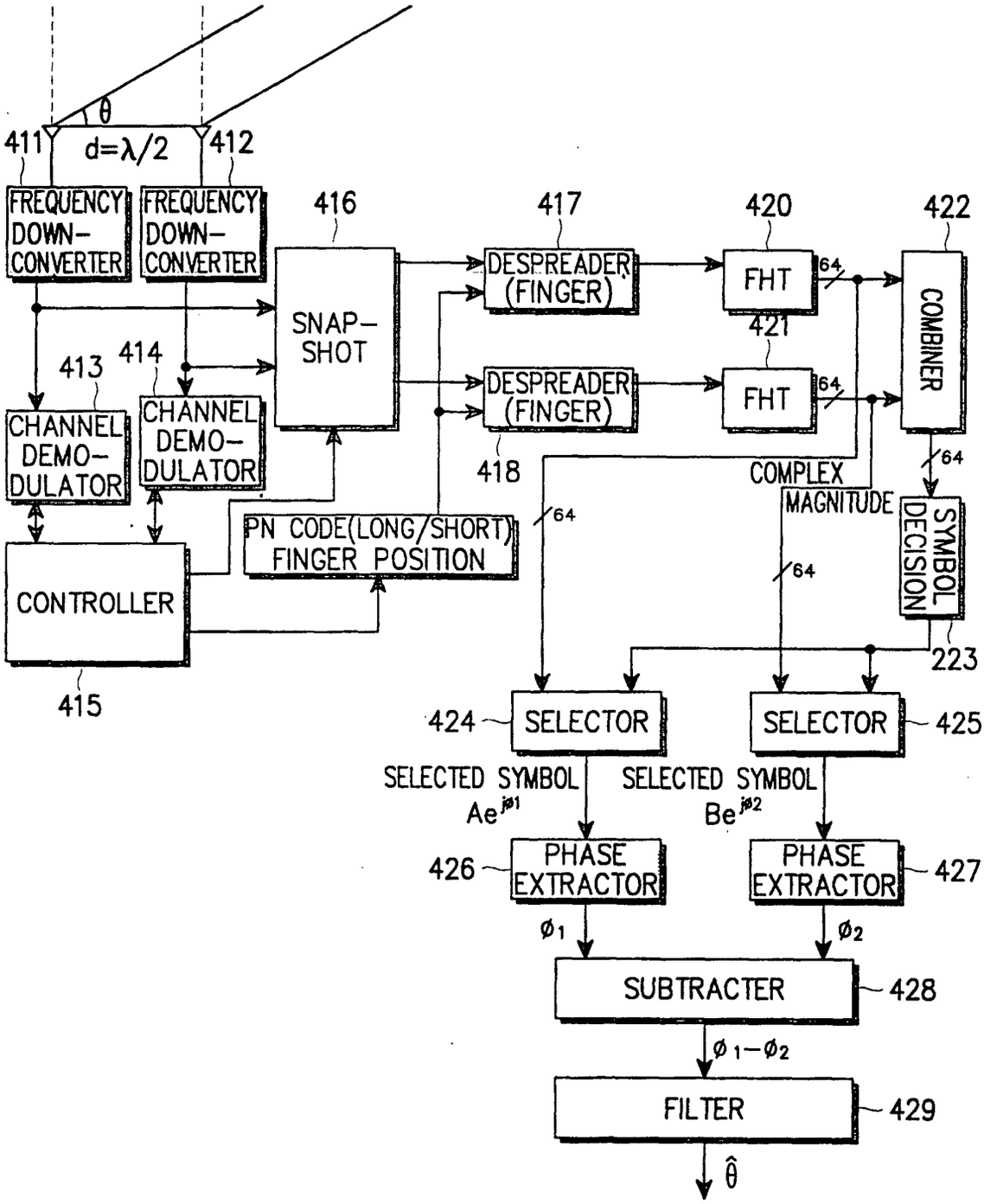
θ
d=λ/2
411
412
FREQUENCY DOWN-CONVERTER
FREQUENCY DOWN-CONVERTER
416
417
420
422
SNAP-SHOT
DESPREADER (FINGER)
FHT
64
COMBINER
421
413
414
DESPREADER (FINGER)
FHT
64
CHANNEL DEMO-DULATOR
CHANNEL DEMO-DULATOR
418
COMPLEX MAGNITUDE
64
SYMBOL DECISION
PN CODE(LONG/SHORT) FINGER POSITION
64
64
CONTROLLER
223
415
424
SELECTOR
SELECTOR
425
SELECTED SYMBOL
Ae^jφ1
SELECTED SYMBOL
Be^jφ2
426
PHASE EXTRACTOR
PHASE EXTRACTOR
427
φ1
φ2
SUBTRACTER
428
φ1−φ2
FILTER
429
θ̂

FIG. 4

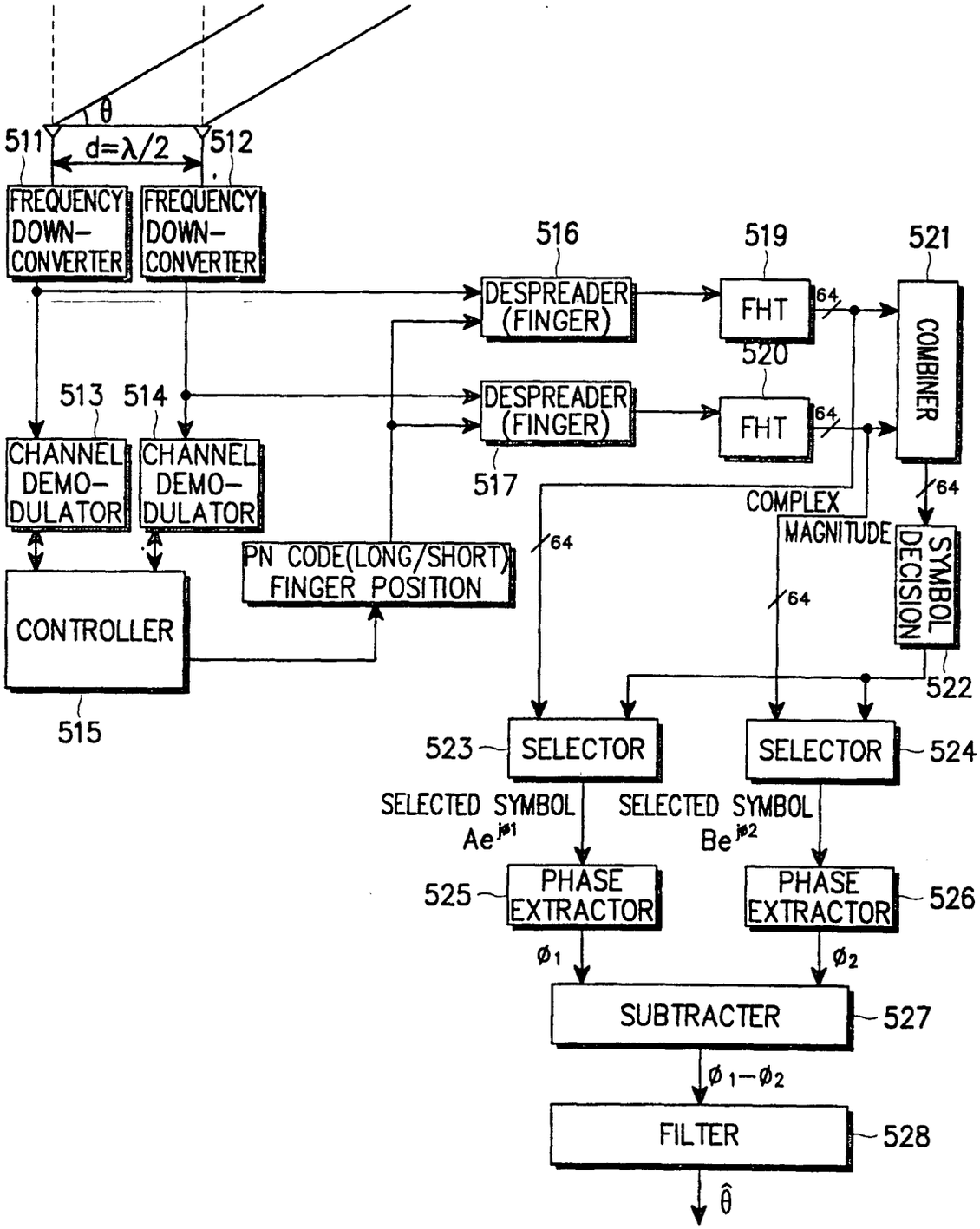
θ
511
d=λ/2
512
FREQUENCY DOWN-CONVERTER
FREQUENCY DOWN-CONVERTER
516
519
521
DESPREADER (FINGER)
FHT
64
COMBINER
520
513
514
DESPREADER (FINGER)
FHT
64
CHANNEL DEMO-DULATOR
CHANNEL DEMO-DULATOR
517
64
COMPLEX MAGNITUDE
SYMBOL DECISION
PN CODE(LONG/SHORT) FINGER POSITION
64
64
CONTROLLER
522
515
523
SELECTOR
SELECTOR
524
SELECTED SYMBOL
Ae^jφ1
SELECTED SYMBOL
Be^jφ2
525
PHASE EXTRACTOR
PHASE EXTRACTOR
526
φ1
φ2
SUBTRACTER
527
φ1−φ2
FILTER
528
θ̂

FIG. 5