(19) Europäisches Patentamt
European Patent Office
Office européen des brevets

(11) EP 1 075 435 B1

(12) **EUROPEAN PATENT SPECIFICATION**

(45) Date of publication and mention of the grant of the patent:
05.11.2003 Bulletin 2003/45

(21) Application number: **99921278.0**

(22) Date of filing: **04.05.1999**

(51) Int Cl.[7]: **B65D 57/00**

(86) International application number:
PCT/NL99/00268

(87) International publication number:
WO 99/058419 (18.11.1999 Gazette 1999/46)

(54) **SEPARATOR FOR PLATES**

ZWISCHENLAGE FÜR PLATTEN

SEPARATEUR DE PLAQUES

(84) Designated Contracting States:
DE FR GB

(30) Priority: **08.05.1998 NL 1009115**

(43) Date of publication of application:
14.02.2001 Bulletin 2001/07

(73) Proprietor: **BESIN B.V.**
3851 BD Ermelo (NL)

(72) Inventor: **DIDERICH, Johannes, Philippus, Ludovicus, Maria**
NL-8243 PA Lelystad (NL)

(74) Representative: **De Hoop, Eric**
Octrooibureau Vriesendorp & Gaade
P.O. Box 266
2501 AW Den Haag (NL)

(56) References cited:
EP-A- 0 375 563
WO-A-96/16881
WO-A-97/12817
WO-A-97/12818

Note: Within nine months from the publication of the mention of the grant of the European patent, any person may give notice to the European Patent Office of opposition to the European patent granted. Notice of opposition shall be filed in a written reasoned statement. It shall not be deemed to have been filed until the opposition fee has been paid. (Art. 99(1) European Patent Convention).

EP 1 075 435 B1

Printed by Jouve, 75001 PARIS (FR)

Description

[0001] The invention relates to a separator for plates, in particular fragile plates such as glass plates, comprising a strip of carrier material with a projecting nose near one end.

[0002] Such separators are used in the glass plate industry. The glass leaves the glass melting furnace as a continuous web, which is cut into plates, after which the plates are placed upright against each other. The plates for instance have a height of 3 metres and a width of 6 metres. In order to be able to transport several plates simultaneously, a number of separators are arranged for instance every 8 to 10 plates, so that an interspace is created between each packet of glass plates. Known separators have a thickness of approximately 25 mm. The known separators are usually made of plastic or paper material in order to acquire sufficient strength at a low weight.

[0003] The separators are automatically fitted onto a glass plate after the latter has been cut off, either prior to placing the plates upright or during or after it placing them upright. So as to prevent the separators from sliding down, they are provided at one end with a thickening, called nose in the field, which hooks behind the upper edge or head end edge of the glass plate. In order to prevent that a separator shifts or falls off the glass plate, for instance during manipulation of the glass plate, the separator can be provided, at the side of the nose, with a detachable connecting means, such as a suction cup.

[0004] It is known to use a separator, in which the nose consists of a substantially squared angle section with a first sidepiece and a second sidepiece. The strip of carrier material here is provided with a recess near the end where the nose has to be attached. In this recess the first sidepiece of the nose is attached, so that the second sidepiece of the nose projects at the level of the end of the strip of carrier material. Such a separator according to the preamble of claim 1 is known from the International patent application W097/12817.

[0005] A drawback of this known separator is that a recess has to be made in the strip of carrier material. Another drawback is that the nose, which is also made from plastic or paper material, has a rounding-off in the inner angle which is present between the first sidepiece and the second sidepiece. As a result the separator will not lie on the head end edges of the glass plates with the second sidepiece when the first sidepiece abuts the glass plates, or the separator will remain at a distance from the glass plates when the second sidepiece rests on the head end edges of the glass plates. Another drawback is that the nose will have to be treated to ensure that it does not leave particles, such as paper particles, on the glass, as the first sidepiece will come to rest against the flat side of a glass plate.

[0006] It is an object of the invention to provide an improved separator. It is another object to provide a simplified separator. It is yet another object to provide a separator which can be made at low costs.

[0007] At least one of these objects if achieved with the separator according to claim 1.

[0008] In this way it is achieved that when used the first sidepiece projects upright beyond the glass plate. The first sidepiece need no longer be arranged recessed in the layer of carrier material. It is also achieved in this way that the first sidepiece no longer contacts the glass plates, so that only the second sidepiece will come to rest on the head end sides or edges of the glass plates. As it will not be so bad when a particle such as a paper particle will end up on the head end edges of the glass plates, the second sidepiece will not have to be treated against the leaving of particles, so that in fact the entire nose need not have such a treatment. When the nose is made from paper material, it can be recycled better in this way.

[0009] Now that the nose, with regard to the known separator, is as it were turned around, the rounding-off between the sidepieces will no longer contact the glass plates and the second sidepiece will always abut the head end edges of the glass plates well. It also surprisingly appeared that the attachment is better resistant to the loads to which the nose of the separator is subjected, in particular the shearing loads. From tests it appeared that the resistance to shearing loads can be twice as high as with the known separator.

[0010] According to an advantageous embodiment the first sidepiece is arranged on the strip of carrier material in line with the contact plane of the strip of carrier material with the plates. In this way a recess in the strip of carrier material is no longer present.

[0011] Preferably the edge of the first sidepiece, which faces away from the second sidepiece, is arranged at the same level as the end of the strip of carrier material. In this way the separator projects beyond the glass plates as little as possible.

[0012] In an advantageous manner the first sidepiece is glued to the strip of carrier material, preferably by hot-melt glue.

[0013] Preferably the angle section is substantially as wide as the strip of carrier material, so that the angle section can be made as thin as possible.

[0014] According to an advantageous embodiment the angle section is made from paper material, preferably from solid cardboard. With a carrier from paper material the entire separator can be recycled, and with solid cardboard the sidepieces of the angle section can remain thin.

[0015] Preferably the angle section consists of layers of paper that are laminated to each other, which in a preferred embodiment is recycled photographic paper. In this way the angle section acquires great strength, in which the photographic paper offers a cheap basic material.

[0016] Preferably the strip of carrier material consists of a strip of honeycomb panel, particularly cellulose material, such as paper or cardboard. Honeycomb panel is

a very light and rigid material, to which the nose can easily be glued.

[0017] Preferably the second sidepiece of the angle section projects 10 to 40 mm beyond the carrier material, depending on the thickness of the packet of (glass) plates.

[0018] The invention will be elucidated on the basis of an exemplary embodiment, referring to the attached drawing.

[0019] Figure 1 shows a perspective view of the separator according to the invention.

[0020] Figure 2 shows a side view of the separator according to figure 1 on a slightly smaller scale.

[0021] Figure 3 shows a perspective view of the nose of the separator according to figure 1 on a larger scale.

[0022] Figure 1 shows the separator 1 consisting of an elongated strip of honeycomb panel 2 which at its upper end is provided with a nose which is formed by an angle section 3 from solid cardboard.

[0023] Figure 3 shows that the angle section 3 consists of a first sidepiece 4 and a second sidepiece 5.

[0024] Figure 2 shows, that near the upper end of the strip of honeycomb panel 2 the first sidepiece 4 of the angle section 3 is arranged on the honeycomb panel, the first sidepiece 4 extending upwards with regard to the second sidepiece 5.

[0025] Figures 1 and 2 clearly show that only the second sidepiece 5 will come to rest against the glass plates. The inner rounding-off 6 between the first sidepiece 4 and the second sidepiece 5 will not contact the glass plates, because the first sidepiece 4 extends upwards with regard to the second sidepiece 5.

[0026] The angle section 3 preferably is as wide as the strip of honeycomb panel 2 is wide. In the exemplary embodiment the strip of honeycomb panel is more than 3 metres long, 80 mm wide and 20 mm thick.

[0027] When using an angle section, consisting of solid cardboard made from laminated recycled photographic paper, the thickness of the sidepieces 4 and 5 need only be about 3 mm.

[0028] In order obtain sufficient adhesion, by means of a hotmelt glue, of the first sidepiece 4 to the strip of honeycomb panel 2 the first sidepiece 4 preferably is 60 mm high.

[0029] The second sidepiece 5 of the angle section 3 preferably projects 10 to 40 mm beyond the strip of honeycomb panel 2.

Claims

1. Separator (1) for plates, in particular fragile plates such as glass plates, comprising a strip of carrier material (2) with a projecting nose near one end, which nose consists of a substantially squared angle section (3) with a first sidepiece (4) and a second sidepiece (5), **characterised in that** the second sidepiece (5) projects from the carrier material at a distance from the end of the strip of carrier material and the first sidepiece (4) is arranged on the strip of carrier material (2) between the second sidepiece (5) and the end of the strip of carrier material (2).

2. Separator (1) according to claim 1, the first sidepiece (4) being arranged on the strip of carrier material (2) in the contact surface of the strip of carrier material with the plates.

3. Separator (1) according to claim 1 or 2, the edge of the first sidepiece (4), which faces away from the second sidepiece (5), being arranged at the same level as the end of the strip of carrier material (2).

4. Separator (1) according to claim 1, 2 or 3, the first sidepiece (4) of the nose being glued to the strip of carrier material (2), preferably with hotmelt glue.

5. Separator (1) according to claim 1, 2, 3 or 4 the angle section (3) being substantially as wide as the strip of carrier material (2).

6. Separator (1) according to claim 1, 2, 3, 4, or 5, the angle section (3) being made from paper material.

7. Separator (1) according to claim 6, the angle section (3) being made from solid cardboard.

8. Separator (1) according to claim 6 or 7, the angle section (3) consisting of layers of paper that are laminated to each other.

9. Separator (1) according to claim 8, the paper being recycled photographic paper.

10. Separator (1) according to any one of the preceding claims, the strip of carrier material (2) consisting of a strip of honeycomb panel.

11. Separator (1) according to any one of the preceding claims, the second sidepiece (5) of the angle section (3) projecting 10 to 40 mm beyond the carrier material (2).

Patentansprüche

1. Zwischenlage (1) für Platten, insbesondere zerbrechliche Platten, wie Glasplatten, umfassend einen Streifen Tragermaterials (2) mit bei einem Ende einer vorstehenden Nase, welche Nase aus einem hauptsächlich rechtwinkligen Eckprofil (3) mit einem ersten Seitenstück (4) und einem zweiten Seitenstück (5) besteht, **dadurch gekennzeichnet, daß** das zweite Seitenstück (5) auf Abstand von dem Ende des Streifens Tragermaterials ab dem Tragermaterial hervorsteht und das erste Seiten-

stück (4) auf dem Streifen Tragermaterials (2) zwischen dem zweiten Seitenstück (5) und dem Ende des Streifens Tragermaterials (2) angeordnet ist.

2. Zwischenlage (1) nach Anspruch 1, wobei das erste Seitenstück (4) auf dem Streifen Tragermaterials (2) in der Kontaktfläche des Streifens Tragermaterials mit den Platten angeordnet ist.

3. Zwischenlage (1) nach Anspruch 1 oder 2, wobei der Rand des ersten, von dem zweiten Seitenstück (5) abgekehrten Seitenstückes (4) auf derselben Höhe als das Ende des Streifens Tragermaterials angeordnet ist.

4. Zwischenlage (1) nach Anspruch 1, 2 oder 3, wobei das erste Seitenstück (4) der Nase auf dem Streifen Tragermaterials (2) geklebt ist, vorzugsweise mit Heizkleber.

5. Zwischenlage (1) nach Anspruch 1, 2, 3 oder 4, wobei das Eckprofil (3) hauptsächlich ebensobreit wie der Streifen Tragermaterials (2) ist.

6. Zwischenlage (1) nach Anspruch 1, 2, 3, 4, oder 5, wobei das Eckprofil (3) aus Papiermaterial hergestellt ist.

7. Zwischenlage (1) nach Anspruch 6, wobei das Eckprofil (3) aus massivem Karton hergestellt ist.

8. Zwischenlage (1) nach Anspruch 6 oder 7, wobei das Eckprofil (3) aus aneinander laminierten Schichten von Papier besteht.

9. Zwischenlage (1) nach Anspruch 8, wobei das Papier Recyclingfotopapier ist.

10. Zwischenlage (1) nach einem der vorhergehenden Ansprüche, wobei der Streifen Tragermaterials (2) aus einem Streifen Wabenplatte besteht.

11. Zwischenlage (1) nach einem der vorhergehenden Ansprüche, wobei das zweite Seitenstück (5) des Eckprofils (3) 10 bis 40 mm außer dem Tragermaterial (2) hervorsteht.

Revendications

1. Séparateur pour plaques, en particulier des plaques fragiles telles que des plaques de verre, comprenant une bande de matériau support (2) avec un nez en saillie à proximité d'une extrémité, lequel nez consiste en une section angulaire sensiblement à angle droit (3) avec une première partie latérale (4) et une deuxième partie latérale (5), **caractérisé en ce que** la deuxième partie latérale (5) fait saillie à partir du matériau porteur à une certaine distance de l'extrémité du matériau porteur et la première partie latérale (4) est disposée sur la bande du matériau porteur (2) entre la deuxième partie latérale (5) et l'extrémité de la bande de matériau porteur (2).

2. Séparateur (1) selon la revendication 1, la première partie latérale (4) étant disposée sur la bande de matériau porteur (2) dans la surface de contact de la bande de matériau porteur avec les plaques.

3. Séparateur (1) selon la revendication 1 ou 2, le bord de la première partie latérale (4), qui est détourné de la deuxième partie latérale (5) étant disposé au même niveau que l'extrémité de la bande de matériau support (2).

4. Séparateur (1) selon la revendication 1,2 ou 3, la première partie latérale (4) du nez étant collée sur la bande de matériau porteur (2), de préférence avec une colle thermofusible.

5. Séparateur (1) selon la revendication 1,2,3 ou 4, la section angulaire (3) étant sensiblement aussi large que la bande de matériau porteur (2).

6. Séparateur (1) selon la revendication 1,2,3,4 ou 5, la section angulaire (3) étant réalisée à partir d'un matériau papier.

7. Séparateur (1) selon la revendication 6, la section angulaire (3) étant réalisée à partir de carton solide.

8. Séparateur (1) selon la revendication 6 ou 7, la section angulaire (3) consistant en des couches de papier qui sont stratifiées l'une sur l'autre.

9. Séparateur (1) selon la revendication (8), le papier étant du papier photographique recyclé.

10. Séparateur (1) selon l'une quelconque des revendications précédentes, la bande de matériau porteur (2) consistant en une bande de panneau alvéolaire.

11. Séparateur (1) selon l'une quelconque des revendications précédentes, la deuxième partie latérale (5) de la section angulaire (3) faisant saillie de 10 à 40 mm au-delà du matériau porteur (2).

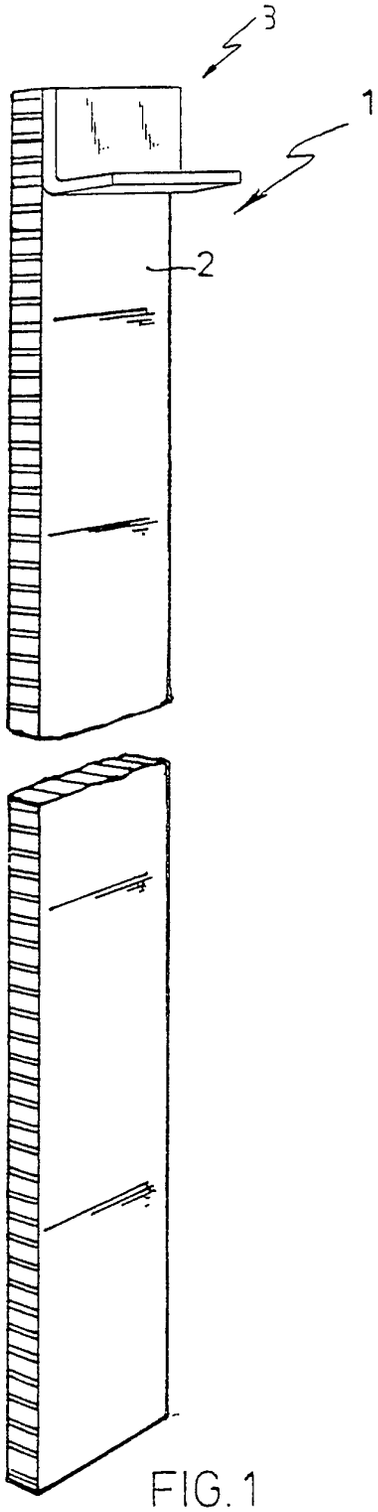

FIG. 1

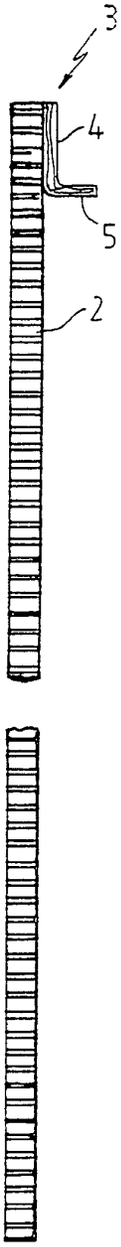

FIG. 2

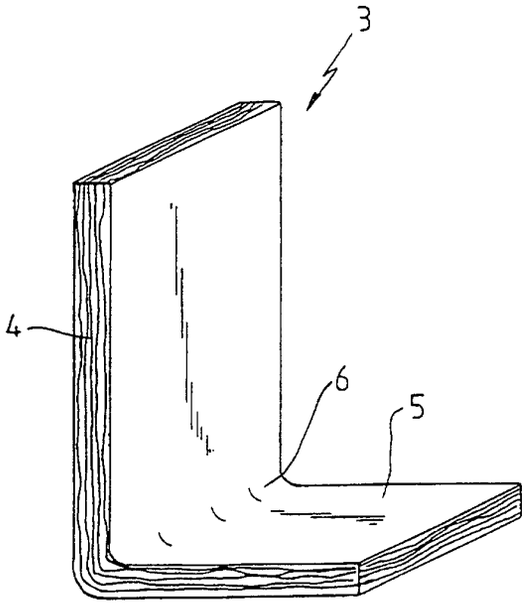

FIG. 3