(19) Europäisches Patentamt
European Patent Office
Office européen des brevets

(11) EP 1 424 135 A1

(12) **EUROPEAN PATENT APPLICATION**

(43) Date of publication:
02.06.2004 Bulletin 2004/23

(51) Int Cl.[7]: **B05B 7/24**

(21) Application number: **03026312.3**

(22) Date of filing: **17.11.2003**

(84) Designated Contracting States:
AT BE BG CH CY CZ DE DK EE ES FI FR GB GR HU IE IT LI LU MC NL PT RO SE SI SK TR
Designated Extension States:
AL LT LV MK

(30) Priority: **29.11.2002 IT TO20021039**
08.09.2003 IT TO20030137 U

(71) Applicant: **Anest Iwata Europe Srl**
10155 Torino (IT)

(72) Inventor: **Vicentini, Marco G.**
10125 Torino (IT)

(74) Representative: **Gallarotti, Franco et al**
Buzzi, Notaro & Antonielli d'Oulx Srl,
Via Maria Vittoria, 18
10123 Torino (IT)

(54) **A manual spray gun and associated disposable cup**

(57) A cup (6) for spray guns, comprising a disposable container (8) joined in removable fashion to a lid (5) with axial outflow fitting (7), independent of the cup and integrated with the body (4) of the gun (1), and a lining element (18) whose shape is complementary to that of the lid (5) and which is inserted in removable fashion within said lid (5) between the container (8) and the outflow fitting (7).

FIG. 2

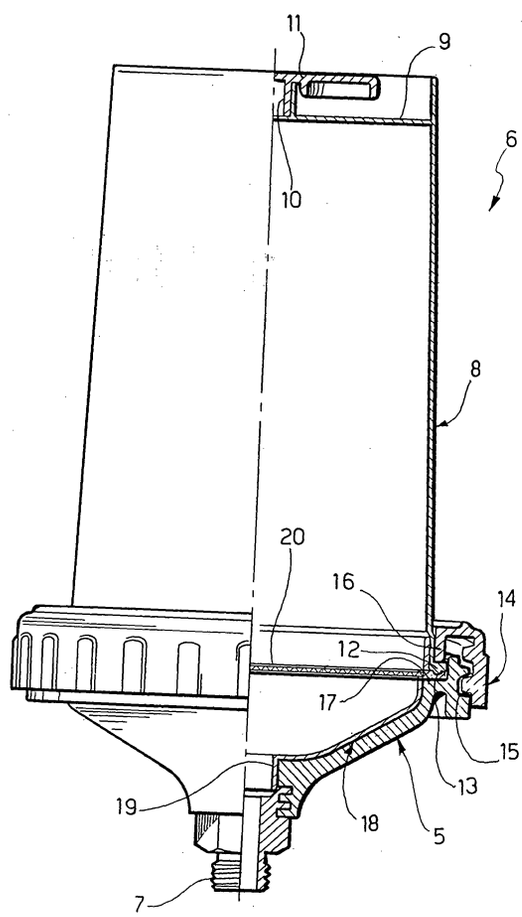

EP 1 424 135 A1

Description

Field of the Invention

[0001] The present invention relates to manual guns for the spray-on application of coating substance such as paints, chemical products and the like.

[0002] More specifically, the invention relates to a manual spray gun of the type comprising a body having a conduit for supplying a substance to be sprayed whereto can be connected a disposable cup having a separable lid provided with an outflow fitting for connection to said supply conduit.

Prior Art

[0003] Spray guns of this kind are known, for instance from the documents US-B-6,213,410 and US-A-2002/0134861. In such guns, the disposable cup is applied in upside down conditions over the gun, and the substance to be sprayed contained in the cup is fed by gravity to the atomising nozzle with which the gun is fitted.

[0004] Alternatively, the cup can be applied underneath the gun, and in this case the substance to be sprayed is supplied under pressure to the atomising nozzle of the gun.

[0005] When the substance is depleted, the disposable cup is removed, thrown away and replaced with a new cup.

[0006] Traditionally in the disposable cups of known spray guns the lid, which is normally separable, constitutes an integral part of the cup: this entails the need to provide a system for coupling with any adapters between the outflow fitting of the lid and the body of the gun which, in addition to being relatively expensive, at times leads to difficulties with the application and removal of the disposable cup.

[0007] A solution of this kind is, in particular, described in the document WO-98/32539, which discloses a cup within which is inserted a disposable container with the substance to be sprayed: said container can consist of a collapsible bag or, as in the cases described with reference to Figure 2 and to Figure 10 of said document, in a vase-shaped container. In both cases, it is an element that serves as an internal liner of the actual cup, which is constituted by an external container connected in removable fashion to a lid with generally conical shape having an axial outflow fitting which can be connected to the body of the spray gun by means of an adapter. This solution eliminates or at least reduces the need to wash the cup at the end of the spraying operations, but the removal of the internal liner element for its replacement requires the prior disassembly of the external container. The external container, too, can be disposable, but in this case the cost of the whole cup is high.

[0008] The current trend, in any case, is to construct the whole cup as a disposable element, so it can be removed and replaced more rapidly when the substance to be sprayed, present within it, is depleted. A solution of this kind is described in the aforementioned document WO-98/32539 with reference to Figures 15-18, and it consists of a disposable cup comprising a container open at an end and provided at the other end with an aeration hole able to be closed, and of a generally conical lid connected in removable fashion to the open end of the container, with the possible provision of a filter, and having an axial outflow fitting able to be connected to the body of a spray gun through an appropriate adapter. After use, both container and lid are thrown away and replaced. Alternatively, the lid may constitute a reusable component, i.e. one that can be used after use together with the gun.

[0009] The first solution (i.e. with disposable container and lid) is relatively costly due to the need to form the outflow fitting of the lid with the means for its removable connection to the gun or even to provide a specific adapter.

[0010] With the second solution (disposable container and reusable lid), when the disposable cup needs to be replaced with a similar disposable cup containing a different substance, it is necessary to wash the lid. This operation can be inconvenient and arduous, and it also entails the risk that, as a result of a hasty or incomplete, the previous substance may contaminate, at least in part, the new substance subsequently sprayed.

Summary of the Invention

[0011] The object of the present invention is to overcome the aforesaid drawbacks, and said object is achieved thanks to the fact that, on one hand, the aforesaid lid is independent of the cup and constitutes a part of the body of the gun, an on the other hand the container of the disposable cup further comprises a lining element having complementary shape to that of said lid and positioned in removable fashion within the lid between said open end of the container and said outflow fitting.

[0012] The lining element of the lid can conveniently be extracted following the removal of the disposable container of the cup, for an easy and thorough cleaning thereof, or - more advantageously - it can be disposable as well. In this case, when the gun must be used for spraying a different substance, the lining element of the lid will also be removed and replaced, as well as the disposable container.

[0013] Said lining element of the lid can advantageously be provided with a tubular appendage extending at least partially within the tubular fitting of the lid, and it is advantageously locked axially relative to the lid itself by means of the connecting ring nut between container and lid.

[0014] The container of the cup advantageously has a bottom wall provided with an aerating valve which can

be opened and closed by means of a rotary shutter.

[0015] Moreover, the container is advantageously provided with a cone frustum conformation, diverging towards its edge destined to be coupled with the lid, which allows it to be conveniently stacked by mutual insertion with identical cups.

Brief description of the drawings

[0016] The invention shall now be described in detail with reference to the accompanying drawings, provided purely by way of non limiting example, in which:

Figure 1 is a schematic side elevation of a spray gun provided with a cup according to the invention,
Figure 2 is a partially sectioned and enlarged elevation view of the cup, and
Figure 3 is an exploded perspective view, in reduced scale, of the cup.

Detailed description of the invention

[0017] Referring initially to Figure 1, the reference number 1 designates the body of a spray painting gun provided posteriorly with a grip 2 and anteriorly with a nebulising nozzle 3 of a generally conventional type.

[0018] In the upper part of the gun 1 is formed a tubular boss 4 communicating with a supply conduit, not visible, connected in known fashion to the atomiser nozzle 3.

[0019] The boss 4 is adapted for the application of a generally conical, or funnel shaped element 5, which defines the lid of a disposable cup 6 containing the substance to be sprayed by means of the gun 1.

[0020] The funnel element 5, made of metal or plastic material, is independent of the disposable cup 6 in the sense that it constitutes and integrated part of the body of the gun: it can be joined to the boss permanently, i.e. in fixed fashion, or in removable fashion. In the case of the illustrated example, the coupling of the funnel element 5 to the boss 4 is achieved by means of a threaded connection including, in the manner shown in Figures 2 and 3, an externally threaded tubular outflow fitting 7 axially projecting from the funnel element 5 and screwed in a corresponding inner thread, not shown, of the tubular boss 4. It should be noted that said coupling could also be accomplished differently, for instance with a bayonet coupling or the like, and as stated also in permanent, i.e. not removable, fashion. A solution can also be envisioned in which the funnel element 5 is integrally formed in a single piece with the body of the gun 1.

[0021] Referring now in greater detail to Figures 2 and 3, the disposable cup 6 comprises a glass-shaped container 8 normally made of moulded plastic material, having cylindrical or more advantageously cone frustum shape in order to allow its stacking by mutual insertion with identical containers.

[0022] The bottom wall of the glass shaped container 8, designated by the number 9, is provided with an aeration valve generally designated by the number 10, whose opening and closing can be controlled by means of a shutter 11 which can be manually actuated in rotation. For the spraying, by the gun 1, of the substance contained in the disposable cup 6, the aerating valve will be placed in the open position, in order to place the glass shaped container 8 in communication with the environment at atmospheric pressure.

[0023] The end of the glass shaped container 8 opposite the bottom wall 9 is open and it has an outer radial flange 12 formed integrally with a circumferential sealing lip 13 projecting axially.

[0024] The annular flange 12 with the sealing lip 13 is hermetically connected in removable fashion to the funnel element 5 by means of an internally threaded ring nut 14 screwed onto an outer thread 15 of said funnel element 5. The ring nut 14 advantageously has an internal axial annular appendage 16 adapted to press dorsally the annular flange 12 of the glass-shaped container 8 against an internal annular abutment surface 17 of the funnel element 5. This assures the connection with total hermetic seal without risks of leaks between the glass-shaped container 8 and the funnel element 5.

[0025] According to a fundamental characteristic of the invention, the disposable cup 6 further comprises a lining element 18 whose shape is complementary to that of the funnel element 5 and which is inserted in removable fashion within it between the annular flange 12 of the glass shaped element 8 and the outflow fitting 7. The lining element 18, which conveniently is also made of moulded plastic material, is preferably disposable and advantageously it has an axial tubular appendage 19 which can extend at least partially within the tubular fitting 7.

[0026] The lining element 18 is axially locked within the funnel element 5 by means of the same ring nut 14 for the removable union of the glass 8. In the case of the illustrated example, the locking is accomplished by the interposition of a filtering disk 20 whose circumferential edge is closed between the sealing lip 13 of the annular flange 12 of the glass 8 and the annular abutment surface 17 of the funnel element 5. It should, however, be observed that the filtering disk 20 is optional: in its absence, or with a differently shaped filtering element engaged for example within the tubular fitting 7, the lining element 18 may be provided with an external annular flange interposed between the lip 13 and the abutment surface 17. The lining element 18 may also be formed in a single piece with the glass shaped container 8.

[0027] The assembly and disassembly of the disposable cup 6 will be readily apparent from the above description: the removal of the glass 8 and of the lining element 18 for their possible replacement can be rapidly and easily performed by effect of the simple unscrewing of the ring nut 14 relative to the funnel element 5.

[0028] According to a variation, not shown in the drawings, the glass container 8 of the disposable cup 6

can be subdivided internally, by means of an integral axial baffle, into two separate chambers, each destined to contain a respective different substance to be sprayed. In this case, the lining element 18 may also be formed with a pair of separate passages able to place in communication the two chambers of the glass shaped element 8 with the outflow fitting 7. To said passages may conveniently be associated respective manual shut off valves to open-close and regulate the flow of the two substances contained in the disposable cup 6 towards the supply conduit of the body 1 of the gun. The two passages may also have different sections, for instance with ratios variable between 1:1 and 1:5, according to the characteristics of the two substance.

[0029] Naturally, the construction details and the embodiments may vary widely with respect to what is described and illustrated herein, without thereby departing from the scope of the present invention as defined in the claims that follow.

Claims

1. A manual spray gun comprising a body (1) having a conduit (4) for supplying a substance to be sprayed whereto can be connected a cup (6) comprising a disposable container (8) open at an end (12), a generally conical lid (5) having an axial outflow fitting (7) connected to said supply conduit (4) of the spray gun (1), and a ring nut (14) for the sealed removable connection between said open end (12) of the container (8) and said lid (5), **characterised in that** said lid (5) is independent of the cup (6) and constitutes a part of the body (1) of the gun, and **in that** said cup (6) further comprise a lining element (18) whose shape is complementary to that of said lid (5) and which is positioned in removable fashion within said lid between said open end (12) of the container (8) and said outflow fitting (7).

2. A gun as claimed in claim 1, **characterised in that** said lining element (18) has a tubular axial appendage (19) extending at least partially into said tubular fitting (7) of the lid (5).

3. A gun as claimed in claim 1 or claim 2, **characterised in that** said lining element (18) is locked axially relative to said lid (5) by means of said connecting ring nut (14).

4. A gun as claimed in any of the previous claims, **characterised in that** said lining element (18) is disposable.

5. A gun as claimed in one or more of the previous claims, in which said container disposable (8) is made of moulded plastic material, **characterised in that** said lining element (18) is also made of moulded plastic material and is formed in a single piece with said container disposable(8).

6. A gun as claimed in any of the previous claims, **characterised in that** it further comprise a filtering disk (20) axially interposed between said container (8) and said lid (5) and through which said lining element (18) is locked axially by means of said ring nut (14).

7. A gun as claimed in any of the previous claims, **characterised in that** said container (8) has a bottom wall (9) provided with an aeration vale (10) which can be opened and closed by means of a rotary shutter (11).

8. A gun as claimed in any of the previous claims, **characterised in that** said container (8) has a cone frustum shape.

9. A gun as claimed in any of the previous claims, **characterised in that** said open end (12) of the container (8) has an outer radial flange (12) formed with a circumferential sealing lip (13) projecting axially, and said connecting ring nut (14) has an internal axial annular appendage (16) able to press dorsally said radial flange (12) of the container (8) against an inner annular abutment surface (17) of said lid (5).

10. A gun as claimed in any of the previous claims, **characterised in that** said lid (5) and said lining element (18) have a general funnel shape.

11. A cup (6) for spray guns, comprising a disposable container (8) open at an end (12), a generally conical lid (5) having an axial outflow fitting (7) able to be connected to the body (4) of a spray gun (1), and a ring nut (14) for the removable sealing connection between said open end (12) of the container (8) and said lid (5), **characterised in that** said lid (5) is independent from the cup (6) to constitute a part of the body (4) of a spray gun (1), and **in that** said cup (6) further comprises a lining element (18) whose shape is complementary to that of said lid (5) and which is positioned in removable fashion within said lid (5) between said open end (12) of the container (8) and said outflow fitting (7).

12. A cup as claimed in claim 11, **characterised in that** said lining element (18) has an axial tubular appendage (19) extending at least partially within said tubular fitting (7) of the lid (5).

13. A cup as claimed in claim 11 or claim 12, **characterised in that** said lining element (18) is locked axially relative to said lid (5) by means of said connecting ring nut (14).

14. A cup as claimed in any of the previous claims 11 to 13, **characterised in that** said lining element (18) is disposable.

15. A cup as claimed in any of the claims 11 to 14, in which said container disposable (8) is made of moulded plastic material, **characterised in that** also said lining element (18) is made of moulded plastic material.

16. A cup as claimed in any of the previous claims 11 to 14, **characterised in that** it further comprises a filtering disk (20) axially interposed between said container (8) and said lid (5) and through which said lining element (18) is axially locked by means of said ring nut (14).

17. A cup as claimed in any of the previous claims 11 to 16, **characterised in that** said container (8) has a bottom wall (9) provided with an aeration valve (10) which can be opened and closed by means of a rotary shutter (11).

18. A cup as claimed in any of the previous claims 11 to 17, **characterised in that** said container (8) has a cone frustum shape.

19. A cup as claimed in any of the previous claims 11 to 18, **characterised in that** said open end (12) of the container (8) has a radial outer flange (12) formed with a circumferential sealing lip (13) projecting axially, and said connecting ring nut (14) has an internal axial annular appendage (16) able to press dorsally said radial flange (12) of the container (8) against an inner annular abutment surface (17) of said lid (5).

20. A cup as claimed in any of the previous claims 11 to 19, **characterised in that** said lid (5) and said lining element (18) have a general funnel shape.

21. A cup as claimed in any of the previous claims 11 to 20, **characterised in that** is adapted to contain two different separate substances to be sprayed.

22. A cup as claimed in any of the previous claims 11 to 21, **characterised in that** said lining element (18) is formed in a single piece with said disposable container (8).

FIG. 1

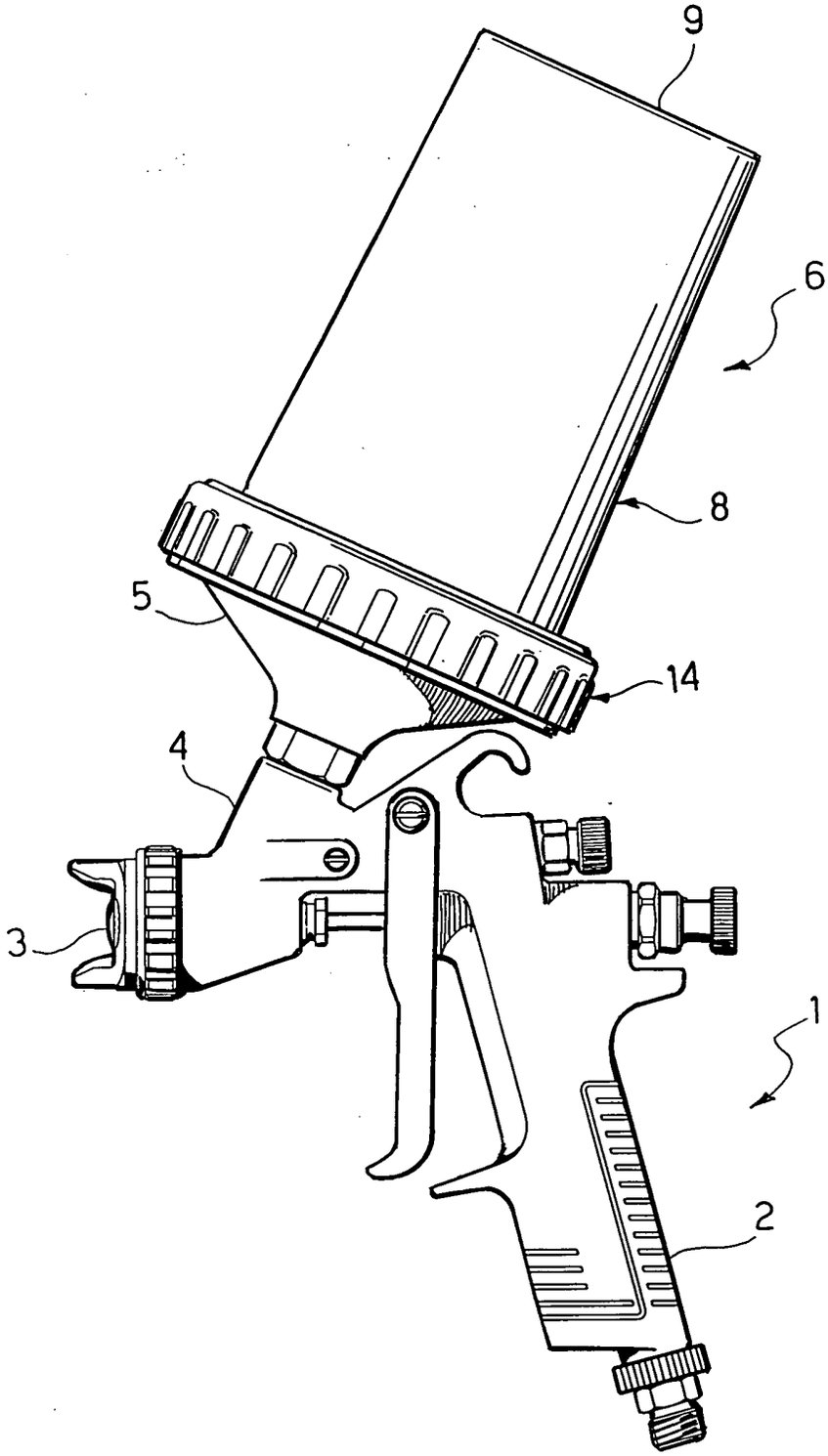

FIG. 2

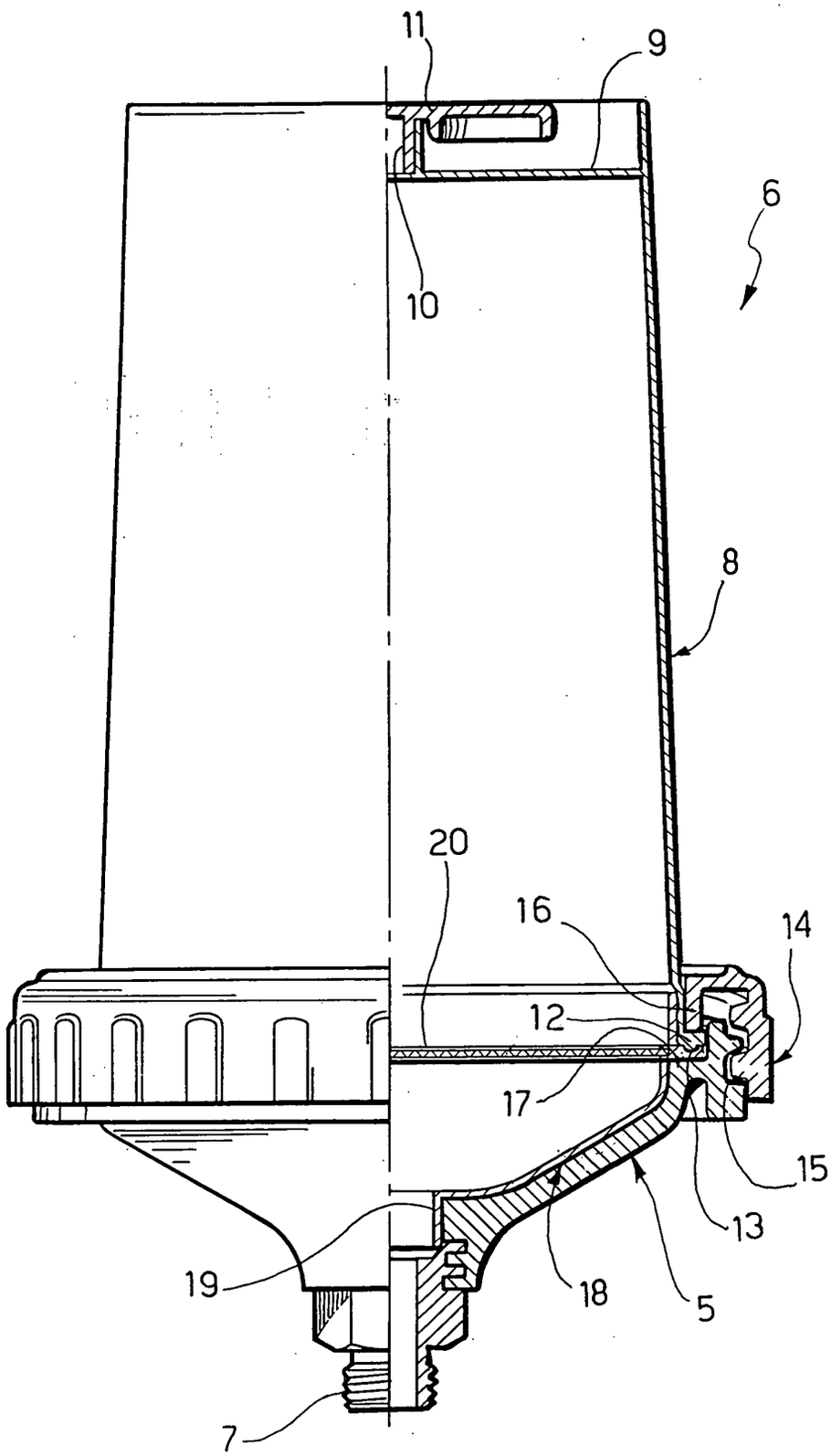

FIG. 3

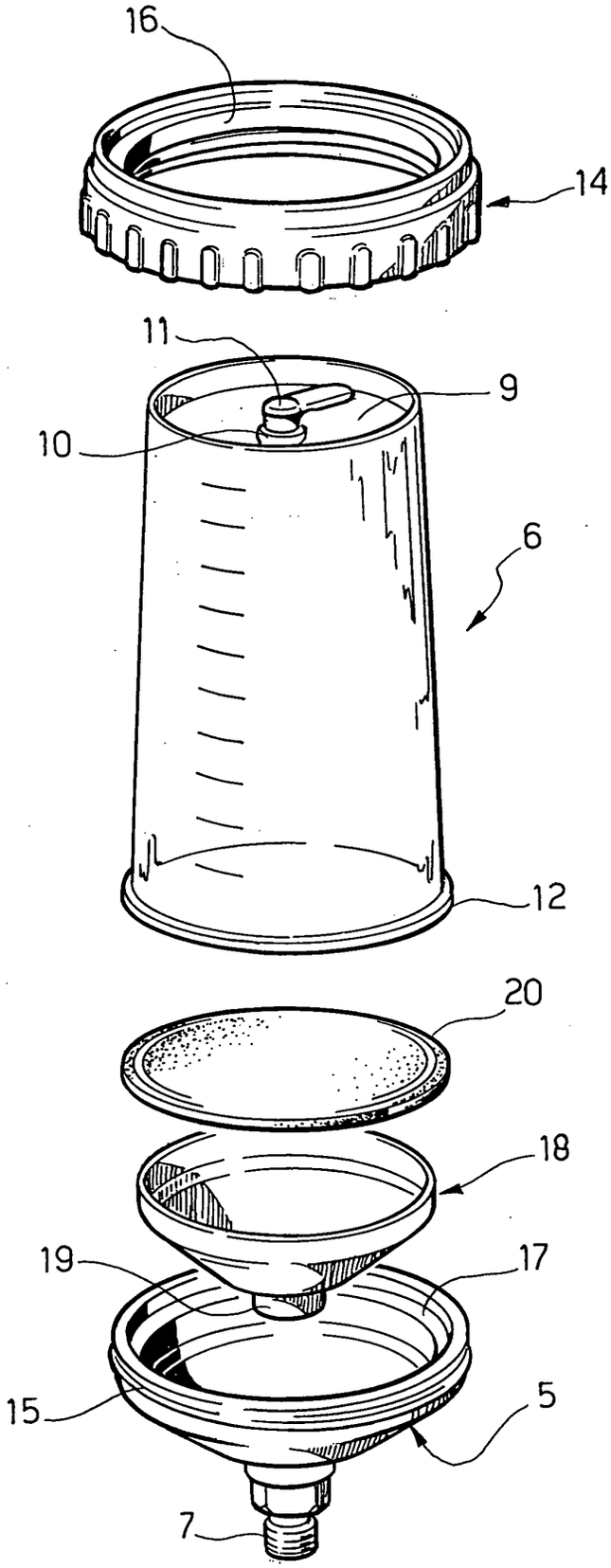

European Patent Office

EUROPEAN SEARCH REPORT

Application Number
EP 03 02 6312

DOCUMENTS CONSIDERED TO BE RELEVANT

Category	Citation of document with indication, where appropriate, of relevant passages	Relevant to claim	CLASSIFICATION OF THE APPLICATION (Int.Cl.7)
X	FR 2 798 868 A (INJELEC) 30 March 2001 (2001-03-30) * the whole document *	1-4, 8-15, 18-20	B05B7/24
P,X	WO 03/045575 A (RUDA MARTIN) 5 June 2003 (2003-06-05) * page 11, line 16 - line 20; figure 2 *	1,5,10	
D,A	WO 98/32539 A (DOUGLAS MALCOLM F ; BUTLER ALAN F (GB); BASTOW DAVID R (GB); JOSEPH ST) 30 July 1998 (1998-07-30) * page 16, line 28 - page 17, line 9; figure 15 * * page 15, line 25 - page 16, line 3 *	6,7,16, 17	
A	FR 2 774 928 A (INJELEC) 20 August 1999 (1999-08-20) * page 6, line 30 - page 7, line 16; figures 3,4 *	1,2,4,8, 10-12, 14,18,22	
			TECHNICAL FIELDS SEARCHED (Int.Cl.7)
A	US 3 074 651 A (AGOSTI BRUNO ET AL) 22 January 1963 (1963-01-22) * column 2, line 35 - line 37; figure 1 *	21	B05B

The present search report has been drawn up for all claims

Place of search	Date of completion of the search	Examiner
Munich	29 January 2004	Jelercic, D

CATEGORY OF CITED DOCUMENTS

X : particularly relevant if taken alone
Y : particularly relevant if combined with another document of the same category
A : technological background
O : non-written disclosure
P : intermediate document

T : theory or principle underlying the invention
E : earlier patent document, but published on, or after the filing date
D : document cited in the application
L : document cited for other reasons
.....
& : member of the same patent family, corresponding document

EPO FORM 1503 03.82 (P04C01)

ANNEX TO THE EUROPEAN SEARCH REPORT ON EUROPEAN PATENT APPLICATION NO. EP 03 02 6312

This annex lists the patent family members relating to the patent documents cited in the above-mentioned European search report.
The members are as contained in the European Patent Office EDP file on
The European Patent Office is in no way liable for these particulars which are merely given for the purpose of information.

29-01-2004

Patent document cited in search report		Publication date	Patent family member(s)			Publication date
FR 2798868	A	30-03-2001	FR	2798868	A1	30-03-2001
WO 03045575	A	05-06-2003	DE	10213715	A1	22-05-2003
			WO	03045575	A1	05-06-2003
WO 9832539	A	30-07-1998	CN	1244141	T	09-02-2000
			EP	0954381	A1	10-11-1999
			JP	2001508698	T	03-07-2001
			PL	334754	A1	13-03-2000
			WO	9832539	A1	30-07-1998
FR 2774928	A	20-08-1999	FR	2774928	A1	20-08-1999
US 3074651	A	22-01-1963	CH	380602	A	15-09-1964
			DE	1261788	B	22-02-1968
			FR	1242480	A	04-01-1961
			GB	940841	A	06-11-1963

EPO FORM P0459

For more details about this annex : see Official Journal of the European Patent Office, No. 12/82