(19) Europäisches Patentamt
European Patent Office
Office européen des brevets

(11) EP 1 464 913 A2

(12) EUROPEAN PATENT APPLICATION

(43) Date of publication:
06.10.2004 Bulletin 2004/41

(51) Int Cl.[7]: **F41A 29/00**, B08B 3/12, C11D 11/00

(21) Application number: **04007060.9**

(22) Date of filing: **24.03.2004**

(84) Designated Contracting States:
AT BE BG CH CY CZ DE DK EE ES FI FR GB GR HU IE IT LI LU MC NL PL PT RO SE SI SK TR
Designated Extension States:
AL LT LV MK

(30) Priority: **25.03.2003 IT PD20030062**

(71) Applicant: **O.M.P. Di Rodighiero S.R.L.**
36031 Dueville,
Frazione Pilastroni (Prov. of Vicenza) (IT)

(72) Inventor: **Rodighiero, Livio**
36031 Dueville (Prov. of Vicenza) (IT)

(74) Representative: **Modiano, Guido, Dr.-Ing. et al**
Modiano & Associati,
Via Meravigli, 16
20123 Milano (IT)

(54) Machine for cleaning firearms and firearm components, and detergent solutions to be used in machines for cleaning firearms

(57) A machine for cleaning firearms and firearm components, comprising a box-like frame (11) that forms an open tank (12), at least one vibrating transducer (14) being associated with the bottom (13) of the tank (12) and being functionally connected to a corresponding ultrasound generator (16) associated with a management and control microprocessor that is interfaced with the user by a control panel (17). The tank (12) can be filled with detergent solution; at least one discharge path (18) being provided on the bottom of the tank (12) and being associated with flow control means (19); thermostat-controlled resistors and means (22) for supporting the firearm components to be cleaned are further associated with the tank (12); the components are immersed in the detergent solution during cleaning.

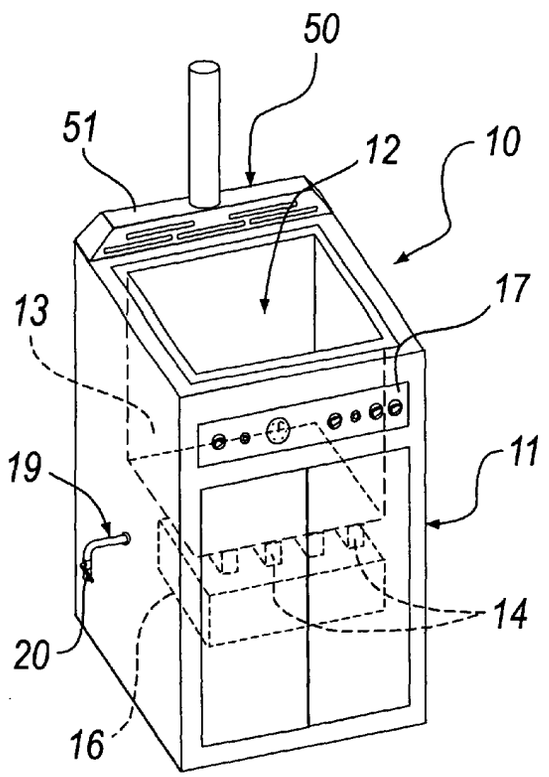

Fig. 1

EP 1 464 913 A2

Description

[0001] The present invention relates to a machine for cleaning firearms and firearm components.

[0002] Cleaning firearm components is an essential operation in order to achieve their correct operation.

[0003] The materials that usually soil firearms are gunpowder (termed "smokeless"), which causes seizure phenomena; water, which causes oxidation and porosities; sweat, which causes separation and wear of the burnishing; salt deposits, which cause corrosion; and gunpowder residues.

[0004] In particular, smokeless gunpowder is normally constituted by ordinary ballistite (gelatinized nitrocellulose, nitroglycerin). Cellulose-based propellants are commonly known as single-base powders; nitroglycerin-based propellants combined with nitrocellulose are termed double-base powders. The powders present in the primer mixture are generally constituted by fulminate of mercury, potassium chlorate, and antimony sulfide.

[0005] Gunpowder residues instead derive from metal parts that constitute the cartridge, such as for example lead (with the addition of 2.5-3% antimony in order to increase core hardness), brass, steel plated with tombac (90% copper, 10% zinc), or Teflon coatings for lining the bullet.

[0006] Currently, firearms and firearm components are cleaned manually by an operator by using cloths impregnated with solvents and brushes or the like.

[0007] The solvents used are often carcinogenic and highly volatile (such as for example benzene), and it is therefore necessary to work with suitable protective tools, such as gloves and extractor hoods.

[0008] However, these tools are not always sufficient to ensure true isolation of the operator with respect to said solvents.

[0009] Moreover, manual cleaning with said solvents, in addition to being risky for the operator, is certainly expensive and environmentally unfriendly, since after using and depleting said solvents it is necessary to dispose of their containers; moreover, said solvents must be stored according to specific fire safety standards.

[0010] Moreover, manual cleaning of said firearms is extremely slow and in some cases not thorough enough, with the risk of severe jamming of the mechanisms and devices that allow to execute the functional cycle of the firearm.

[0011] The aim of the present invention is to provide a machine that solves the problems noted in cleaning firearms and firearm components.

[0012] Within this aim, an object of the present invention is to provide a machine for cleaning firearms and firearm components that allows to clean firearms and firearm components in a manner that is safe for the operator.

[0013] Another object of the present invention is to provide a machine for cleaning firearms and firearm components that cleans thoroughly and rapidly.

[0014] Another object of the present invention is to provide a machine for cleaning firearms and firearm components that can be manufactured with known systems and technologies.

[0015] This aim and these and other objects that will become better apparent hereinafter are achieved by a machine for cleaning firearms and firearm components, characterized in that it comprises a box-like frame that forms an open tank, at least one vibrating transducer being associated with the bottom of said tank and being functionally connected to a corresponding ultrasound generator associated with a management and control microprocessor that is interfaced with the user by means of a control panel, said tank being fillable with detergent solution, at least one discharge path being provided on the bottom of said tank and being associated with flow control means, thermostat-controlled resistors and means for supporting the components of firearms to be cleaned being further associated with said tank, said components being immersed in said detergent solution during cleaning.

[0016] Advantageously, the invention comprises a method for cleaning firearm components that comprises the steps of:

- -- immersing said components in a detergent solution at a temperature between 50° and 70° C,
- -- subjecting said components immersed in said detergent solution to a field of ultrasound with a frequency comprised between 39 and 42 kHz for a time interval comprised between approximately 4 and 11 minutes,
- -- removing said components from said detergent solution and draining them of the liquid fraction that adheres to them, for a time interval comprised between 5 and 20 minutes,
- -- washing said components in water and drying them with substantially dehumidified hot air.

[0017] Further characteristics and advantages of the present invention will become better apparent from the following detailed description of a preferred but not exclusive embodiment thereof, illustrated by way of nonlimiting example in the accompanying drawings, wherein:

Figure 1 is a perspective view of a machine according to the invention;

Figure 2 is a schematic side view of a machine according to the invention;

Figure 3 is a partially sectional plan view of the machine according to the invention, with a first type of said supporting means for the firearm components to be cleaned inserted therein;

Figure 4 is a partially sectional side view of a portion of the machine according to the invention, with said first type of supporting means for the firearm components to be cleaned inserted therein;

Figure 5 is a schematic perspective view of a portion of the machine according to the invention, with a second type of said supporting means for firearm components to be cleaned inserted therein.

[0018] With reference to the figures, a machine for cleaning firearms and firearm components according to the invention is generally designated by the reference numeral 10.

[0019] The machine 10 comprises a box-like frame 11 that has a rectangular plan shape and forms in an upper region an open tank 12 that preferably has a rectangular contour.

[0020] A plurality of per se known vibrating transducers 14 of the piezoelectric type is associated with the bottom 13 of the tank 12.

[0021] The vibrating transducers 14 are located behind the bottom 13, outside the tank 12, and in contact with said bottom.

[0022] The vibrating transducers 14 are functionally connected to a corresponding static ultrasound generator 16, of the silicon type, which is per se known and is in turn associated with a management and control microprocessor (not shown in the figures), which is interfaced with the user by means of a control panel 17.

[0023] The transducers 14 are of the type that has an efficiency of more than 90% and operate with an optimum frequency of approximately 39 kHz.

[0024] The tank 12 can be filled with a detergent solution, whose composition will be described with greater detail hereinafter.

[0025] Thermostat-controlled resistors (not shown in the figures), which allow controlled heating of the solution, are associated with the tank 12.

[0026] A path 18 for discharge outside the machine 10 is provided on the bottom of the tank 12; the discharge path 18 is associated with flow control means 19, such as a cock valve 20.

[0027] During cleaning, the components 21 of the firearms to be cleaned are arranged inside the tank 12 and are immersed in said detergent solution.

[0028] In order to support the components 21 in the immersed condition, supporting means 22 are further associated with the tank 12.

[0029] In a first embodiment, the supporting means 22 are constituted by a basket 23 (Figure 5), which hangs detachably from mutually opposite edges 24 of the tank 12 and is inserted therein so that it is immersed within said detergent solution.

[0030] The basket 23 has a perforated tray 25, which is open in an upper region and from the mutually opposite sides of which arms 26 for engaging the edges 24 protrude upward.

[0031] In this first embodiment, the bottom and the walls of the tray 25 are perforated.

[0032] A variation (not shown in the figures) of said first embodiment has a closed bottom of the tray 25 and completely perforated walls related to the engagement arms 26.

[0033] The components to be cleaned are arranged on the bottom of the tray 25.

[0034] A rod 27 is arranged between the engagement arms 26 and acts as a support in order to hang, by way of hooks not shown in the figures, components of the firearms to be cleaned.

[0035] Variations of the basket 23 may not include the rod 27.

[0036] In a second embodiment of the invention (Figures 2, 3 and 4), the supporting means 22 are constituted by a hanger 30 (alternative variations may include a plurality of hangers), which is arranged detachably and transversely with respect to the tank 12.

[0037] The hanger 30 has respective ends 31 that rest on mutually opposite edges 24 of the tank 12.

[0038] The hanger 30 is constituted by a rod 33 that has contact bodies 34 on its respective ends 31.

[0039] The contact bodies 34 are made of electrically insulating material, in order to prevent the flow of galvanizing currents that might produce surface stains on the components to be cleaned.

[0040] Sliders 35 are arranged so that they can slide along the rod 33, and pairs of hooks 36 stiffened transversely by cross-members (not designated by a reference numeral) extend downward so as to diverge.

[0041] The hooks 36 are preferably made of very strong plastics.

[0042] The sliders 35 have a certain length, and accordingly, when they are close to each other, prevent pairs of contiguous hooks 36 from making mutual contact, thus maintaining a certain minimum space between the components to be cleaned.

[0043] Means 40 for reciprocating movement on the edges 24 of the tank 12 are associated with the supporting means 22.

[0044] In the second embodiment of the invention (Figures 3 and 4), the reciprocating movement means 40 comprise two parallel guides 41, arranged respectively on the edges 24 of the tank 12.

[0045] A carriage 42 is arranged on each guide 41 and is contoured so as to accommodate the corresponding contact body 34 of the end 31 of the hanger 30.

[0046] The carriages 42 move synchronously by way of the action of respective pneumatic actuators 43, whose speed can be adjusted.

[0047] The movement of the carriages 42 is of the reciprocating type, so as to produce an agitation within the tank substantially at right angles to the shock waves of the vibrating transducer 14.

[0048] Proximate to one edge of the tank 12 there are aspirator means 50, suitable to collect the water vapor that originates from the tank.

[0049] The aspirator means 50 are constituted by an extractor hood 51, which is made of plastic material or optionally stainless steel.

[0050] The machine 10 also comprises temperature sensors, not shown in the figures, for sensing the tem-

perature inside the detergent solution in the tank 12; said sensors are associated with the management and control microprocessor.

[0051] The machine 10 further comprises a chronometer, which adjusts the duration of the cleaning cycles in association with the microprocessor.

[0052] As mentioned, the tank 12, during cleaning, is filled with detergent solution, in which the components to be cleaned are immersed.

[0053] Solution level sensors (also not shown in the figures) are also provided in the tank and are associated with the management and control microprocessor; said sensors automatically switch off the heating if the amount of detergent solution is insufficient.

[0054] Variations (not shown in the figures) of the machine (in particular machines with tanks having a capacity of more than 20 liters) have an inlet for introducing the liquid in the tank 12 that is managed by an electric valve that is associated with said level sensors, so as to restore the level of the solution inside the tank.

[0055] A first detergent solution that can be used with said machine comprises fatty alcohols, sulfates, sodium dodecyl benzene sulfonate, sodium lauryl ether sulfate, ethoxylated surfactant, and fragrance substantially in the following quantities:

-- fatty alcohols 2-55 between 1.5 and 3.5% by weight;
-- sulfates between 0.5 and 2% by weight;
-- sodium dodecyl benzene sulfonate between 6.5 and 8.5% by weight;
-- sodium lauryl ether sulfate between 17 and 23% by weight;
-- ethoxylated surfactant between 25 and 35% by weight;
-- fragrance (to IFRA standards) between 0.1 and 0.2% by weight;
-- water remainder to 100%.

[0056] A second detergent solution that can be used with said machine comprises nonylphenol ethoxylate 9EO, nonylphenol ethoxylate 6EO, monoethylene glycol monomethyl ether substantially in the following quantities:

-- nonylphenol ethoxylate 9EO between 60 and 70% by weight;
-- nonylphenol ethoxylate 6EO between 5 and 10% by weight;
-- monoethylene glycol monomethyl ether between 5 and 10% by weight;
-- water remainder to 100%.

[0057] Such second detergent solution is particularly useful in cleaning firearm components on which fatty substances are present.

[0058] A third detergent solution that can be used with said machine comprises a mixture of non-ionic surfactants and non-salified organic acids.

[0059] Said mixture is composed of sodium dodecyl benzene sulfone, dipropylene glycol monomethyl ether, nonylphenol 9EO, substantially in the following quantities:

-- sodium dodecyl benzene sulfone between 20 and 30% by weight;
-- dipropylene glycol monomethyl ether between 5 and 10% by weight;
-- nonylphenol 9EO between 5 and 10% by weight;
-- water remainder to 100%.

[0060] Such third detergent solution is particularly useful in cleaning firearm components which bear rust on their surface, and is a pickling solution for alloys and metals, which in this case is particularly useful where a strong but non-destructive rust-removing action is required.

[0061] The operation of the machine is as follows.

[0062] The components to be cleaned are deposited on the basket 23 or hung from the hanger 30 and immersed within the tank 12, which is filled with a suitable detergent solution.

[0063] The vibration generators, with the vibrating transducers, produce striking wavefronts inside the tank which interact with the components to be cleaned; in this manner, the dirt that is present on the components, also by way of the supporting action of the detergent solution, detaches from said components.

[0064] The thermostat-controlled resistors adjust the temperature inside the tank.

[0065] The microprocessor can be set to operate with a certain power range; within said range, the microprocessor can automatically vary the power required according to the temperature and level detected within the tank; this optimizes the operating parameters of the machine, accordingly ensuring uniform cleaning results and regular working times.

[0066] The machine 10 allows to provide part of a method for cleaning firearm components that consists in immersing said components in a water-based detergent solution at a preset temperature, for example between 50° and 70° C.

[0067] Such immersed components are then subjected to a field of ultrasound at a frequency comprised between 39 and 42 kHz for a time interval comprised between approximately 4 and 11 minutes.

[0068] The components are then removed from the detergent solution and are drained of the liquid fraction that has adhered to them for a time interval between 5 and 20 minutes.

[0069] Such components are then washed in water, preferably demineralized water, and dried with hot air.

[0070] In practice it has been found that the invention thus described solves the problems noted in known types of firearm cleaning system; in particular, the

present invention provides a machine for cleaning firearms and firearm components that allows to clean rapidly, thoroughly and safely.

[0071] Moreover, the present invention provides a cleaning method for firearm components that allows to avoid using substances that are toxic or dangerous for the operator who supervises the cleaning.

[0072] In this regard, the method allows to clean firearm components for water-based solutions, differently from the cleaning methods currently in use.

[0073] Moreover, such cleaning method allows optimum deep cleaning of the various components.

[0074] The invention thus conceived is susceptible of numerous modifications and variations, all of which are within the scope of the appended claims; all the details may further be replaced with other technically equivalent elements.

[0075] In practice, the materials employed, so long as they are compatible with the specific use, as well as the dimensions, may be any according to requirements and to the state of the art.

[0076] The disclosures in Italian Patent Application No. PD2003A000062, from which this application claims priority are incorporated herein by reference.

[0077] Where technical features mentioned in any claim are followed by reference signs, those reference signs have been included for the sole purpose of increasing the intelligibility of the claims and accordingly such reference signs do not have any limiting effect on the interpretation of each element identified by way of example by such reference signs.

Claims

1. A machine for cleaning firearms and firearm components, **characterized in that** it comprises a box-like frame (11) that forms an open tank (12), at least one vibrating transducer (14) being associated with the bottom (13) of said tank (12) and being functionally connected to a corresponding ultrasound generator (16) associated with a management and control microprocessor that is interfaced with the user by means of a control panel (17), said tank (12) being fillable with detergent solution, at least one discharge path (18) being provided on the bottom of said tank (12) and being associated with flow control means (19), thermostat-controlled resistors and means (22) for supporting the components of firearms to be cleaned being further associated with said tank (12), said components being immersed in said detergent solution during cleaning.

2. The machine according to claim 1, **characterized in that** said supporting means (22) for the firearm components to be cleaned comprise a basket (23) that is hung detachably from the edges (24) of said tank (12) and is inserted therein so that it is at least partially immersed in said detergent solution.

3. The machine according to claim 2, **characterized in that** said basket (23) has a perforated tray (25), on opposite sides of which arms (26) for engaging said edges (24) protrude upward.

4. The machine according to claim 3, **characterized in that** a rod (27) is arranged between said engagement arms (26) and acts as a support in order to hang, by way of hooks, said firearm components to be cleaned.

5. The machine according to claim 1, **characterized in that** said supporting means (22) for firearm components to be cleaned comprise at least one hanger (30), which is arranged detachably and transversely with respect to the tank (12) and has respective ends (31) that rest on the mutually opposite edges (24) of said tank (12).

6. The machine according to claim 5, **characterized in that** said hanger (30) comprises a rod (33) that has contact bodies (34) on its respective ends (31), sliders (35) being arranged slidingly along said rod (33), pairs of hooks (36) stiffened transversely by cross-members extending downward from said sliders so as to diverge.

7. The machine according to claims 2 or 5, **characterized in that** means (40) for reciprocating motion on the edges (24) of said tank (12) are associated with said supporting means (22).

8. The machine according to claims 5 and 7, **characterized in that** said reciprocating motion means (40) are associated with said hanger (30).

9. The machine according to claim 8, **characterized in that** said reciprocating movement means (40) comprise two parallel guides (41), which are arranged respectively on said mutually opposite edges (24) of said tank (12), a carriage (42) being arranged on each one of said guides (41) and being shaped so as to accommodate a corresponding said contact body (34) of said end (31) of said hanger (30).

10. The machine according to one or more of the preceding claims, **characterized in that** it comprises aspirator means (50) located proximate to said tank (12).

11. The machine according to claim 10, **characterized in that** said aspirator means comprise an extractor hood (51), which is arranged proximate to one of said edges (24) of said tank (12).

12. The machine according to one or more of the preceding claims, **characterized in that** it comprises sensors for detecting the temperature of the detergent solution within the tank (12), which are associated with said management and control microprocessor.

13. The machine according to one or more of the preceding claims, **characterized in that** it comprises a chronometer for adjusting the duration of the cleaning cycles, said chronometer being associated with said microprocessor.

14. The machine according to one or more of the preceding claims,
characterized in that it comprises, inside said tank (12), sensors for detecting the level of said solution which are associated with said management and control microprocessor.

15. The machine according to claim 14, **characterized in that** it comprises an inlet for liquid inside said tank, which is controlled by an electric valve associated with said level sensors.

16. The machine according to one or more of the preceding claims, **characterized in that** it comprises a reservoir for said detergent solution, which is functionally connected to said tank (12), said tank (12) further containing sensors for detecting the level of said detergent solution which are associated with the management and control microprocessor and with a pump for restoring the level inside said tank (12).

17. A detergent solution particularly for machines for cleaning firearms, **characterized in that** it comprises fatty alcohols, sulfates, sodium dodecyl benzene sulfonate, sodium lauryl ether sulfate, ethoxylated surfactant, fragrance substantially in the following quantities:

- -- fatty alcohols between 1.5 and 3.5% by weight;
- -- sulfates between 0.5 and 2% by weight;
- -- sodium dodecyl benzene sulfonate between 6.5 and 8.5% by weight;
- -- sodium lauryl ether sulfate between 17 and 23% by weight;
- -- ethoxylated surfactant between 25 and 35% by weight;
- -- fragrance between 0.1 and 0.2% by weight.

18. A detergent solution, particularly for machines for cleaning firearms, **characterized in that** it comprises nonylphenol ethoxylate 9EO, nonylphenol ethoxylate 6EO, monoethylene glycol monomethyl ether substantially in the following quantities:

- -- nonylphenol ethoxylate 9EO between 60 and 70% by weight;
- -- nonylphenol ethoxylate 6EO between 5 and 10% by weight;
- -- monoethylene glycol monomethyl ether between 5 and 10% by weight.

19. A detergent solution, particularly for firearm cleaning machines, **characterized in that** it comprises a mixture of non-ionic surfactants and non-salified organic acids.

20. The solution according to claim 19, **characterized in that** said mixture comprises sodium dodecyl benzene sulfone, dipropylene glycol monomethyl ether, nonylphenol 9EO, substantially in the following quantities:

- -- sodium dodecyl benzene sulfone between 20 and 30% by weight;
- -- dipropylene glycol monomethyl ether between 5 and 10% by weight;
- -- nonylphenol 9EO between 5 and 10% by weight.

21. The detergent solution particularly for machines for cleaning firearms according to one of claims 13 to 15, **characterized in that** it comprises water to reach 100%.

22. A cleaning method for firearm components, comprising the steps of:

- -- immersing said components in a detergent solution with a temperature comprised between 50° and 70° C,
- -- subjecting said components immersed in said detergent solution to a field of ultrasound having a frequency comprised between 39 and 42 kHz for a time interval comprised between 4 and 11 minutes,
- -- removing said components from said detergent solution and draining them of the adhered liquid fraction for a time interval comprised between 5 and 20 minutes,
- -- washing said components in water and drying them with substantially dehumidified hot air.

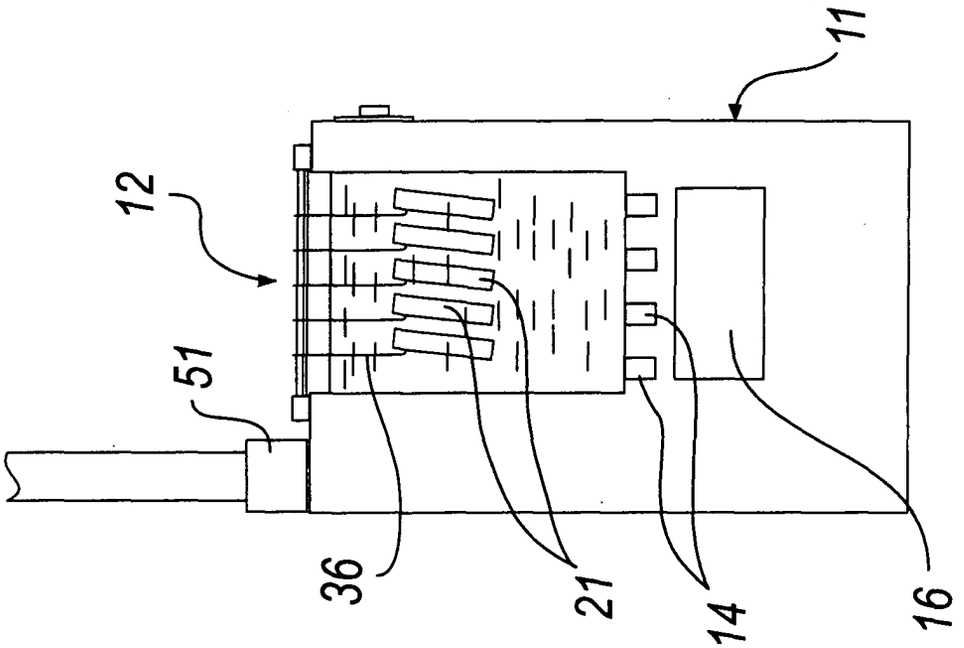

Fig. 2

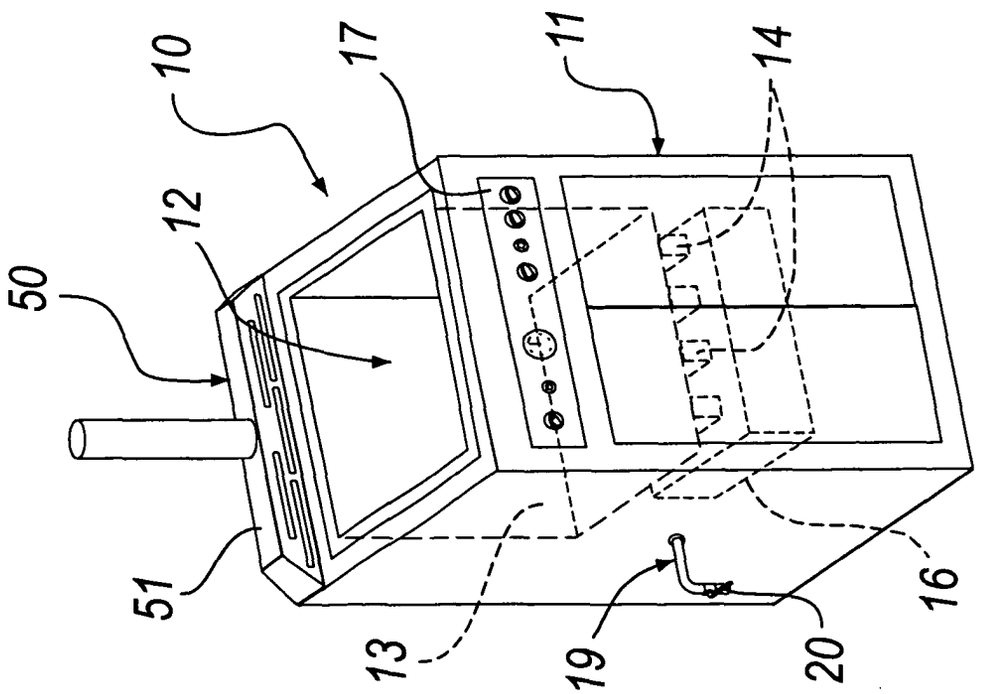

Fig. 1

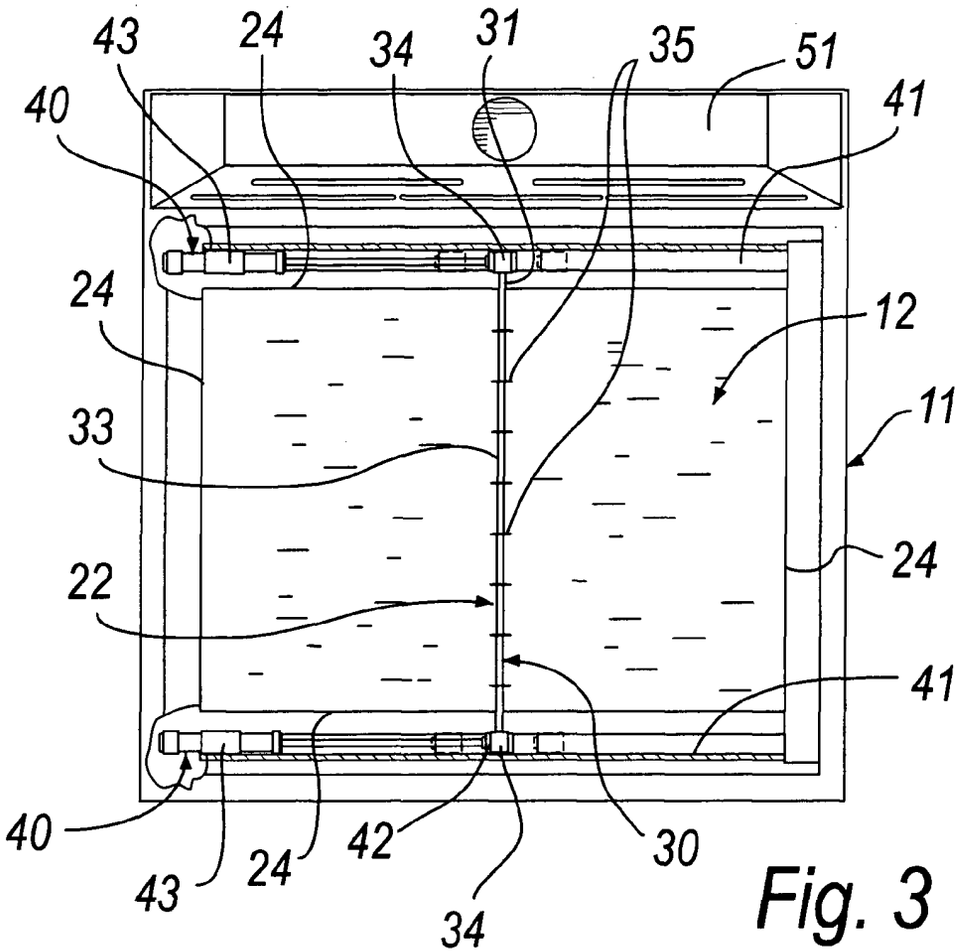
43
24
34
31
35
51
40
41
24
12
33
11
24
22
41
40
43
24
42
30
34

Fig. 3

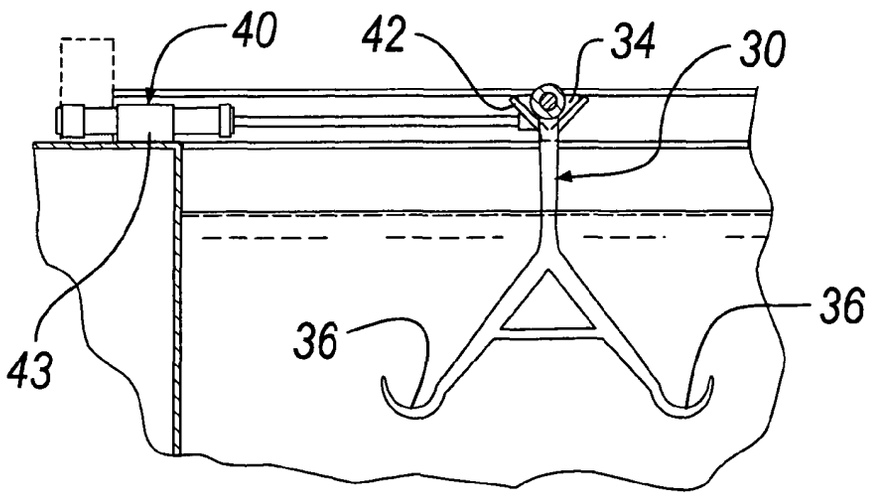
40
42
34
30
43
36
36

Fig. 4

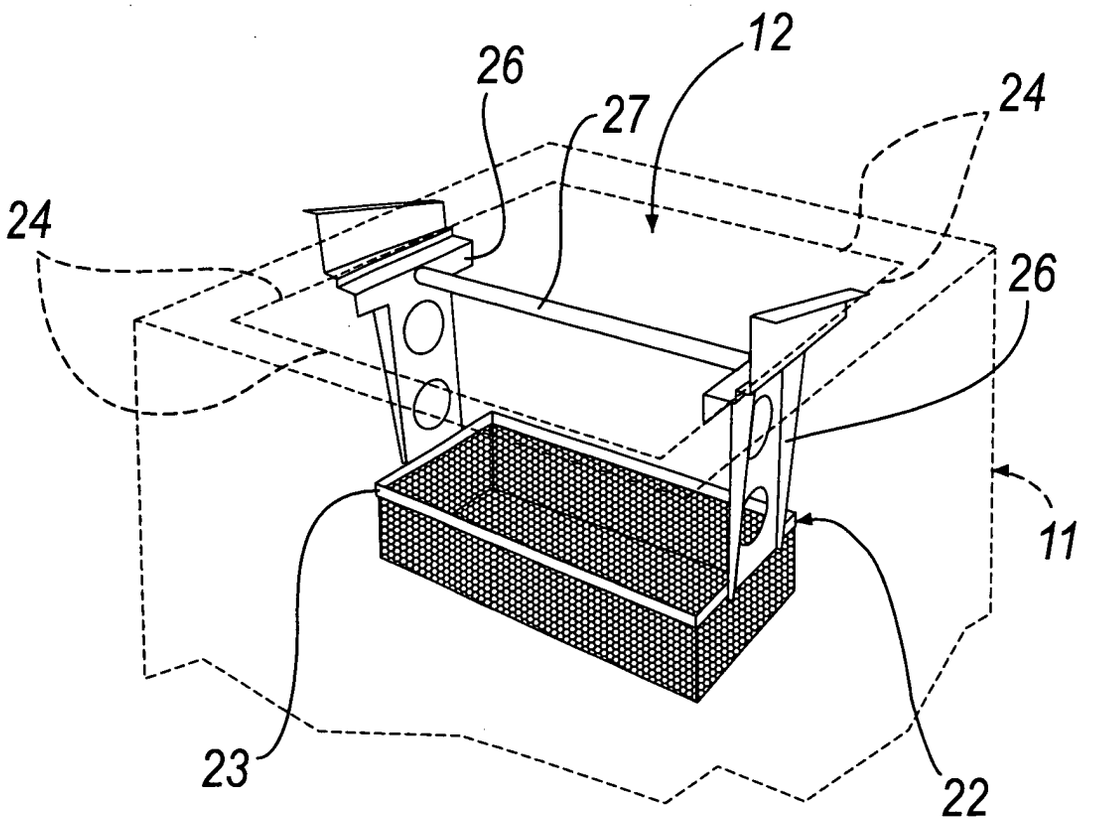

Fig. 5