(19) Europäisches Patentamt
European Patent Office
Office européen des brevets

(11) EP 1 559 671 A1

(12) EUROPEAN PATENT APPLICATION
published in accordance with Art. 158(3) EPC

(43) Date of publication:
03.08.2005 Bulletin 2005/31

(21) Application number: **02778083.2**

(22) Date of filing: **08.11.2002**

(51) Int Cl.[7]: **B66B 13/30**

(86) International application number:
PCT/JP2002/011687

(87) International publication number:
WO 2004/041705 (21.05.2004 Gazette 2004/21)

(84) Designated Contracting States:
AT BE BG CH CY CZ DE DK EE ES FI FR GB GR IE IT LI LU MC NL PT SE SK TR

(71) Applicant: **MITSUBISHI DENKI KABUSHIKI KAISHA**
Tokyo 100-8310 (JP)

(72) Inventors:
- **MORI, Akinobu,**
  Mitsubishi Denki Kabushiki Kaisha
  Chiyoda-ku, Tokyo 100-8310 (JP)
- **IIDA, Masaji, Mitsubishi Denki Kabushiki Kaisha**
  Chiyoda-ku, Tokyo 100-8310 (JP)
- **HANAJIMA, M.,**
  Mitsubishi Denki Kabushiki Kaisha
  Chiyoda-ku, Tokyo 100-8310 (JP)

(74) Representative: **HOFFMANN - EITLE**
Patent- und Rechtsanwälte
Arabellastrasse 4
81925 München (DE)

(54) ELEVATOR DOOR WITH WINDOW

(57) In an elevator door with a window according to the present invention, an opening 1c is formed in a door panel 1, and a glass plate 2 having substantially the same shape as the opening 1c is fitted into the opening 1c. In an edge portion of the opening 1c, a fixing member 3 is arranged in each of both side portions of the glass plate 2. A urethane or silicon elastic adhesive 4 is provided between, while in direct contact with, a peripheral edge portion of the glass plate 2 and the fixing member 3. The elastic adhesive 4 serves to fix the fixing member 3 onto the door panel 1 and fix the glass plate 2 onto the fixing member 3.

FIG. 2

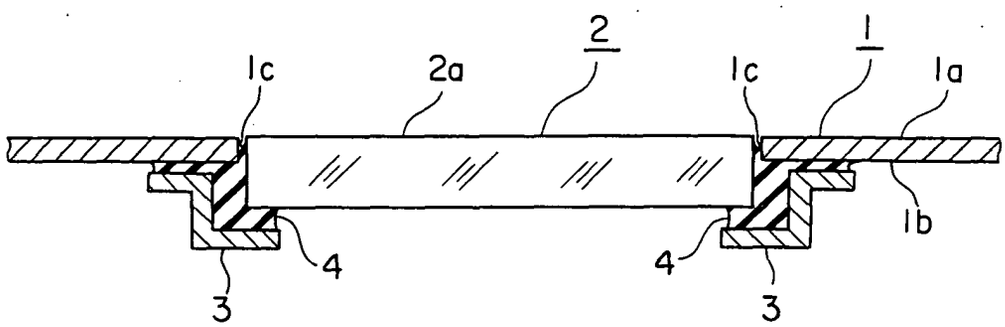

EP 1 559 671 A1

Description

Technical Field

[0001] The present invention relates to an elevator door provided with a window, and more specifically to an improvement of an elevator door with a window of the type in which a glass plate is fitted in a door panel.

Technical Background

[0002] In recent years, a window is often provided to a door for opening/closing the entrance of an elevator car. This is from the viewpoints of releasing passengers from a sense of confinement of a car and crime prevention, and a transparent glass window is provided in many cases. In particular, such a window is often provided to an elevator installed in housing and apartments where the elevator is frequently used by women and children.

[0003] For production of a conventional elevator door with a window, first, a rectangular opening is formed in a door panel. Then, a glass plate having a surface area slightly larger than that of the opening is prepared, and the glass plate is arranged so as to close the opening from the rear surface side of the door panel. Then, in each of positions corresponding to two opposing sides of the glass plate thus arranged, a fixing member having a substantially Z-shaped cross section is arranged so as to extend along each of the two sides. Amounting hole, through which a bolt is to be passed, is previously formed in the fixing member. On the other hand, a mounting bolt is previously provided in a predetermined position on the rear surface of the door panel. The mounting bolt is passed through the mounting hole so as to bring the fixing member into engagement with an edge portion of the glass plate, and the fixing member is fastened in position with a nut. Then, both edge portions of the glass plate are fixed in position while sandwiched between an edge of the opening and the fixing member.

[0004] With the elevator door provided with a window constructed as described above, light from the outside enters inside the car, thus offering a sense of openness. In addition, the use of a transparent glass plate allows passengers to look outside from inside the car and also look inside the car from the outside, and therefore crime prevention effects can be anticipated.

[0005] With the conventional elevator door with a window constructed as described above, however, it is necessary to provide a mounting bolt upright on the rear surface of the door panel in advance, and also to form the mounting hole on the fixing member. This leads to an increase in the requisite manufacturing time and also in the number of parts, resulting in an increase in cost. Further, the front surface of the door panel and the front surface of the glass plate are not made flush with each other, which detracts from the aesthetic appearance of the elevator door.

[0006] The present invention is made to solve the problems described above, and an object thereof is to provide an elevator door with a window which allows a reduction in cost for its ease of manufacture and reduced number of parts and also enables an improvement in terms of design.

Disclosure of the Invention

[0007] An elevator door with a window of the present invention comprises: a door panel having an opening; a fixing member provided in an edge portion of the opening and extending on a rear side of the door panel; a transparent plate having substantially the same shape as the opening and fitted into the opening so as to close the opening; and an elastic adhesive which is arranged between a rear surface of the door panel and the fixing member while in direct contact with both the rear surface of the door panel and the fixing member to fix the fixing member onto the rear surface of the door panel, and which is arranged between a peripheral edge portion of the transparent plate and the fixing member while in direct contact with both the peripheral edge portion of the transparent plate and the fixing member to fix the transparent plate onto the fixing member.

Brief Description of the Drawings

[0008]

Fig. 1 is a perspective view, as seen from a rear surface side, of an elevator door with a window according to Embodiment 1 of the present invention.
Fig. 2 is a cross sectional view taken along the plane A of the elevator door with a window of Fig. 1.
Fig. 3 is a cross sectional view of an elevator door with a window according to Embodiment 2 of the present invention.
Fig. 4 is a cross sectional view of an elevator door with a window according to Embodiment 3 of the present invention.
Fig. 5 is a cross sectional view of an elevator door with a window according to Embodiment 4 of the present invention.
Fig. 6 is a perspective view showing a rear surface of an elevator door with a window according to Embodiment 5 of the present invention.
Fig. 7 is a perspective view showing a rear surface side of an elevator door with a window according to Embodiment 6 of the present invention.
Fig. 8 is an enlarged view of a positioning protrusion of Fig. 7.
Fig. 9 is a perspective view showing a rear surface side of a fixing member of an elevator door with a window according to Embodiment 7 of the present invention.
Fig. 10 is a perspective view showing a glass plate of the elevator door with a window according to Em-

bodiment 7 of the present invention.

Best Mode for carrying out the Invention

Embodiment 1

[0009] Fig. 1 is a perspective view, as seen from a rear surface side, of an elevator door with a window according to Embodiment 1 of the present invention. Besides, Fig. 2 is a sectional view taken along the plane A of Fig. 1. Referring to the figures, a rectangular opening 1c is provided in substantially the central portion of a door panel 1 of an elevator. Fitted into the opening 1c is a glass plate 2, which is a transparent rectangular plate having an outer shape that is somewhat smaller in size than the opening 1c. The glass plate 2 is made from a material that is more lightweight than conventionally used materials.

[0010] On a rear surface 1b side of the door panel 1, a fixing member 3 having a Z-shaped cross section is arranged in each of positions corresponding to two opposing sides of the glass plate 2 so as to extend vertically along each of the sides. As well illustrated in the cross sectional view of Fig. 2, a urethane or silicone adhesive 4, which exhibits elasticity when solidified, is filled in between the rear surface 1b of the door panel 1 and each fixing member 3, and between a peripheral edge portion of the glass plate 2 and each fixing member 3. The fixing members 3 are fixed onto the rear surface 1b of the door panel 1 with the elastic adhesive 4. The glass plate 2 is also fixed with the elastic adhesive 4 in a place inside the opening 1c. In the peripheral edge portion of the glass plate 2, a surface thereof which comes into contact with the elastic adhesive 4 is not applied with coating etc, thus leaving its material exposed. That is, in place of applying coating on the glass plate 2 and then applying the adhesive 4 thereon, the adhesive 4 is applied directly onto the glass plate 2. Since the glass plate 2 is made from a lightweight material according to this embodiment, fixation with the adhesive 4 is adequate for maintaining a sufficient strength.

[0011] Next, a method of manufacturing the door with a window is described. First, the opening 1c is formed in the door panel 1 by using a pressing machine or the like. Next, the glass plate 2 is fitted into the opening 1c of the door panel 1. Then, a tape that exhibits excellent releasability is attached onto the front surface 1a side of the door panel 1 so as to close a gap formed between an outer peripheral edge of the glass substrate 2 and an inner peripheral edge of the opening 1c. The tape can be easily peeled off from the elastic adhesive 4 after the elastic adhesive 4 is solidified, and is attached for the purpose of preventing the elastic adhesive 4 from lying off the surface of the door panel 1 to spoil the aesthetic appearance.

[0012] Next, in this state, the door panel 1 is placed on a surface plate or a flat workbench with its front surface 1a side down. This is to make the front surface 1a of the door panel 1 and a front surface 2a of the glass plate 2 flush with each other. Then, the elastic adhesive 4 is applied in a predetermined thickness onto the side surfaces and the rear surface of the peripheral edge portion of the glass plate 2. Further, the fixing members 3 are placed on the elastic adhesive 4, and then the fixing members 3 are subjected to pressing with a predetermined pressure. Then, this state is maintained until the elastic adhesive 4 solidifies.

[0013] Note that, at this time, a tape similar to the one described above may be attached between each fixing member 3 and the door panel 1, and between the glass plate 2 and each fixing member 3. This is to ensure that the elastic adhesive 4 will not squeeze out and prevent positional displacement among the door panel 1, the fixing members 3, and the glass plate 2.

[0014] Further, as another method of manufacturing the door with a window, for example, it is also possible to attach the above-described tape after arranging the glass plate 2 and the fixing members 3 in predetermined positions, and fill the elastic adhesive 4 into a slight space formed between the glass plate 2 and the fixing members 3.

[0015] Since the elevator door with a window constructed as described above includes the urethane or silicon elastic adhesive 4 which is provided between, while in direct contact with both, the peripheral edge portion of the glass plate 2 and each fixing member 3 to thereby fix the glass plate 2 onto the fixing members 3, the glass plate 2 can be fixed onto the door panel 1 without using a mounting bolt and a mounting nut. Further, the time required for providing the mounting bolt and the time required for forming a mounting hole can be reduced, making it possible to achieve a reduction in cost. In addition, the fixing of the glass plate 2 is effected with the adhesive 4 having elasticity, allowing vibrations generated during running of the elevator to be absorbed so that the elevator provides a comfortable ride. Further, the front surface of the glass plate 1 is arranged flush with the front surface of the door panel 1, so that an improvement in terms of design is realized. Further, as the elastic adhesive 4 is provided between the two members to be bonded so as to be in direct contact with both the members, firm and secure fixing between the two members is provided. Further, in the peripheral edge portion of the glass plate 2, a portion thereof which comes into contact with the elastic adhesive 4 is applied with no coating to leave its material exposed, thus providing even firmer fixing.

[0016] Note that, while in this embodiment two fixing members 3 are arranged in positions corresponding to two opposing sides of the glass plate 2, four fixing members 3 may be provided in total in positions corresponding to four sides of the glass plate 2, with one for each of the four sides.

Embodiment 2

[0017] Fig. 3 is a cross sectional view of an elevator door with a window according to Embodiment 2 of the present invention. In this embodiment, fixing members 6 are integrated with the door panel 1.

[0018] A manufacturing method for the elevator door is hereinafter described. Press working is performed such that when forming the opening 1c in the door panel 1 by using a pressing machine, the fixing members 6 are formed at the same time along the peripheral edge of the opening 1c. Each fixing member 6 is bent so as to have a substantially U-shaped cross section, with its forward end portion 6a directed toward inside the opening 1c. The forward end portion 6a abuts the rear surface of the glass plate 2 for positioning of the glass plate 2. That is, the glass plate 2 is arranged such that its front surface becomes flush with the front surface of the door panel 1, with its rear surface abutting the forward end portion 6a of the fixing member 6. Then, the elastic adhesive 4 is filled in the space between the outer peripheral edge of the glass plate 2 and the inner peripheral edge of the opening 1c.

[0019] The elevator door with a window constructed as described above provides the following effects in addition to the effects of Embodiment 1. That is, the fixing members 6 are integrated with the door panel 1, whereby there is no need to perform positioning on the fixing members 6 with respect to the door panel 1, and it is possible to achieve a further reduction in cost.

[0020] In addition, the forward end portion 6a of each fixing member 6 abuts the rear surface of the glass plate 2 so as to position the glass plate 2 in a predetermined position, whereby the front surface of the door panel 1 and the front surface of the glass plate 2 can be easily made flush with each other without placing the door panel 1 on a surface plate or the like as in Embodiment 1, making it possible to achieve an improvement in workability and also a reduction in cost.

Embodiment 3

[0021] Fig. 4 is a cross sectional view of an elevator door with a window according to Embodiment 3 of the present invention. In this embodiment, a decorative molding 7 is embedded in the gap between the peripheral edge portion of the glass plate 2 and the inner peripheral edge portion of the opening 1c of the door panel 1. That is, the decorative molding 7 is arranged like a frame along the perimeter of the glass plate 2.

[0022] Otherwise, Embodiment 3 is of the same construction as Embodiment 2.

[0023] With the elevator door with a window constructed as described above, the provision of the decorative molding 7 renders the elastic adhesive 4 invisible, thus providing an enhanced aesthetic appearance.

Embodiment 4

[0024] Fig. 5 is a cross sectional view of an elevator door with a window according to Embodiment 4 of the present invention. In this embodiment, a laminated glass consisting of two glass plates is used, that is, the first glass plate 2 fitted into the opening 1c and a second glass plate 5 arranged in intimate contact with the rear surface of the first glass plate 2. A principal surface of the second glass plate 5 has a larger area than that of the first glass plate 2. As a result, the peripheral edge portion of the second glass plate 5 forms a protruding portion 5a protruding beyond the peripheral edge portion of the first glass plate 2 by a predetermined distance. Note that the first glass plate 2 and the second glass plate 5 may be formed integrally with each other as a single glass plate having a step portion along its perimeter.

[0025] The glass plate constructed as described above includes a small area portion (the first glass plate 2) fitted into the opening 1c, and a large area portion (the second glass plate 5) provided on the rear surface side of the small area portion and having a larger area than the opening 1c, the large surface area having formed therein the protruding portion 5a where at least both side edge portions of the large surface area protrudes beyond the small area portion. The elastic adhesive 4 is provided between the rear surface of the door panel 1 and the protruding portion 5a.

[0026] In the elevator door with a window constructed as described above, the elastic adhesive 4 does not spread into the back of the first glass plate 2 and the second glass plate 5. Accordingly, there is no fear of the elastic adhesive 4 being seen through the glass plate to appear along the edge portion of the window when looking inside the window from the front side (the front surface side of the glass plate). As a result, a further improvement in aesthetic appearance can be achieved.

Embodiment 5

[0027] Fig. 6 is a perspective view showing the rear surface side of an elevator door with a window according to Embodiment 5 of the present invention. In this embodiment, marks 11 used for positioning of the fixing members 3 are provided on the rear side of the door panel 1. Specifically, the marks 11 are triangular seals.

[0028] Otherwise, Embodiment 5 is of the same construction as Embodiment 1.

[0029] With the elevator door with a window constructed as described above, the fixing members 3 are positioned in conformity with the marks 11, whereby the positioning of the fixing members 3 is facilitated to achieve improved workability.

[0030] Note that the marks 11 are not limited to seals; for example, they may be drawn with a pen or scratches made by a marking bar or the like may serve as the marks.

Embodiment 6

[0031] Fig. 7 is a perspective view showing the rear surface side of an elevator door with a window according to Embodiment 6 of the present invention. Besides, Fig. 8 is an enlarged view of each positioning protrusion of Fig. 7. In this embodiment, protrusions 12 used for positioning of the fixing members 3 are provided on the rear side of the door panel 1. Each protrusion 12 is a very small protrusion of about 1 mm in height, and has a substantially conical configuration as shown in Fig. 8. The protrusions 12 are formed by striking with a punch or the like a steel plate constituting the rear surface of the door panel 1 from the rear side of the steel plate. However, the method of forming the protrusions 12 is not limited to this; in the case where it is impossible to strike the steel plate from its rear side, the protrusions 12 may be provided by adhering, for example, small conical pieces that are prepared in advance onto the steel plate.

[0032] Otherwise, Embodiment 6 is of the same construction as Embodiment 5.

[0033] With the elevator door with a window constructed as described above, when performing positioning on the fixing members 3, the fixing members 3 may simply be pressed against the positioning protrusions 12 to effect the positioning, whereby the positioning operation is further facilitated to achieve an improvement in workability.

Embodiment 7

[0034] Fig. 9 is a perspective view, as seen from the rear side, of a fixing member of an elevator door with a window according to Embodiment 7 of the present invention. As shown in Fig. 9, in this embodiment, a surface 3a in a portion of the fixing member 3 which comes into contact with the elastic adhesive 4 is subjected to surface roughening. Further, as shown in Fig. 10, surface roughening is performed on surfaces 2c in portions of the peripheral edge portion of the glass plate 2 which come into contact with the elastic adhesive 4. Surface roughening is performed on those surfaces 3a, 2c such that those surfaces are subjected to shot blasting, for example, to form minute irregularities thereon.

[0035] Otherwise, Embodiment 7 is of the same construction as Embodiment 1.

[0036] With the elevator door with a window constructed as described above, surface roughening is performed on the surfaces 3a, 2c in the portions that come into contact with the elastic adhesive 4, whereby the elastic adhesive 4 holds fast to those surfaces for an enhanced bonding strength. Therefore, the door panel 1, the glass plate 2, and the fixing members 3 are firmly fixed to each other, whereby excellent durability can be attained. In addition, the amount of the elastic adhesive 4 can be reduced, making it possible to achieve a reduction in cost.

Industrial Applicability

[0037] The elevator door with a window constructed as described above is effective for use in an elevator used by a large number of people, and is particularly effective when provided in an elevator installed in housing and apartments where the elevator is frequently used by women and children.

Claims

1. An elevator door with a window **characterized by** comprising:

a door panel having an opening;
a fixing member provided in an edge portion of the opening and extending on a rear side of the door panel;
a transparent plate having substantially the same shape as the opening and fitted into the opening so as to close the opening; and
an elastic adhesive which is arranged between a rear surface of the door panel and the fixing member while in direct contact with both the rear surface of the door panel and the fixing member to fix the fixing member onto the rear surface of the door panel, and which is arranged between a peripheral edge portion of the transparent plate and the fixing member while in direct contact with both the peripheral edge portion of the transparent plate and the fixing member to fix the transparent plate onto the fixing member.

2. An elevator door with a window according to Claim 1, **characterized in that** the transparent plate is arranged such that its front surface is located flush with a front surface of the door panel.

3. An elevator door with a window according to Claim 1 or 2, **characterized in that** the fixing member is provided integrally with the door panel.

4. An elevator door with a window according to any one of Claims 1 to 3, **characterized in that** a decorative molding is embedded in a gap between the peripheral edge portion of the transparent plate and an inner peripheral edge portion of the opening.

5. An elevator door with a window according to any one of Claims 1 to 4, **characterized in that**:

the transparent plate has:

a small area portion fitted into the opening; and
a large area portion provided on a rear sur-

face side of the small area portion and having an area larger than that of the opening, the large area portion having a protruding portion where at least both side edge portions of the large area portion protrude beyond the small area portion; and
the elastic adhesive is arranged between the rear surface of the door panel and the protruding portion.

6. An elevator door with a window according to any one of Claims 1, 2, 4, and 5, **characterized in that** a marking for positioning of the fixing member is provided on the rear side of the door panel.

7. An elevator door with a window according to Claim 6, **characterized in that** the mark is a protrusion provided on the rear side of the door panel.

8. An elevator door with a window according to any one of Claims 1 to 7, **characterized in that** a portion in the peripheral edge portion of the transparent plate which comes into contact with the elastic adhesive, and a portion of the fixing member which comes into contact with the elastic adhesive are subjected to surface roughening.

9. An elevator door with a window according to any one of Claims 1 to 8, **characterized in that** the transparent plate is a glass plate.

10. An elevator door with a window according to any one of Claims 1 to 9, **characterized in that** the elastic adhesive is a urethane or silicon elastic adhesive.

FIG. 1

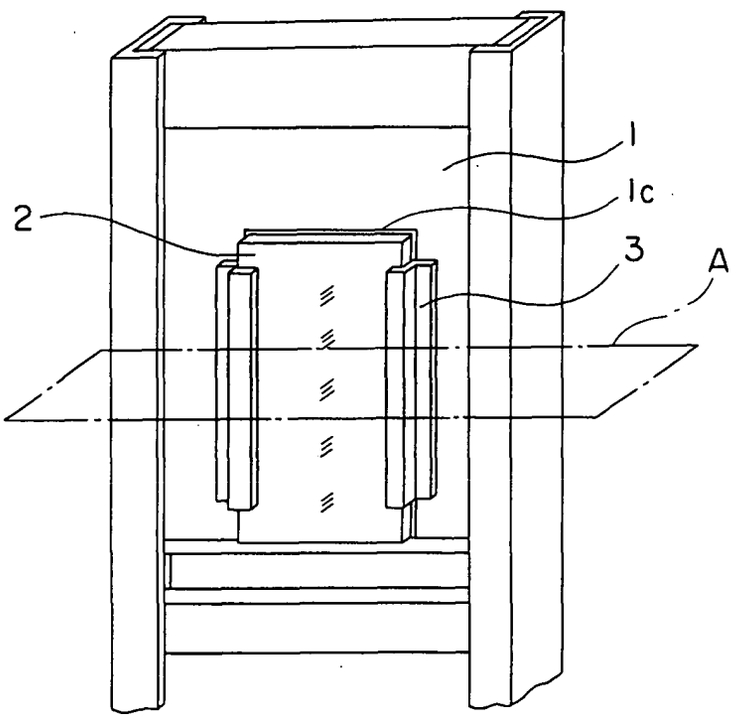

FIG. 2

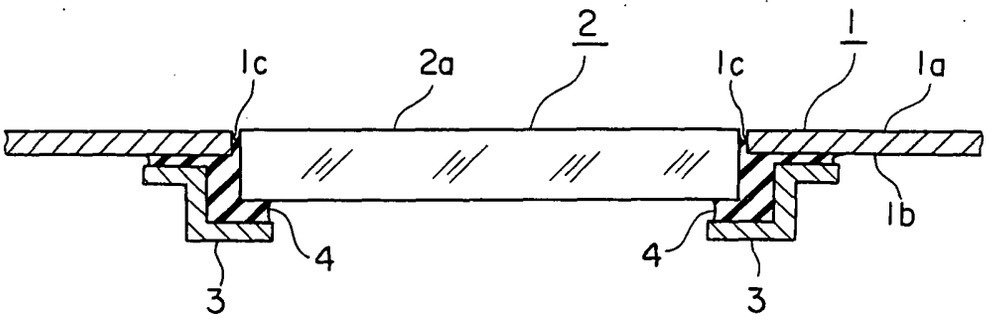

FIG. 3

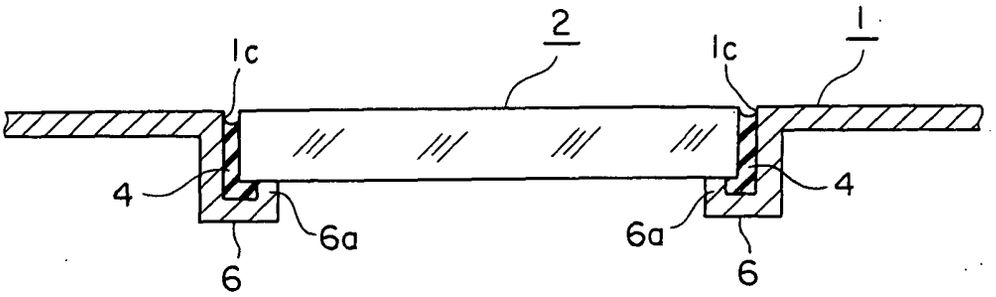

FIG. 4

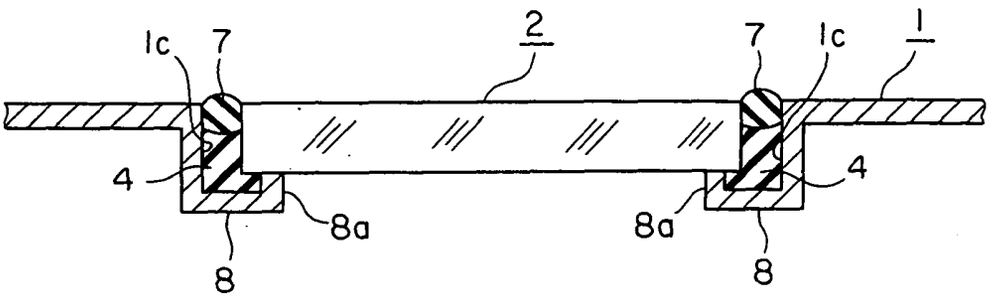

FIG. 5

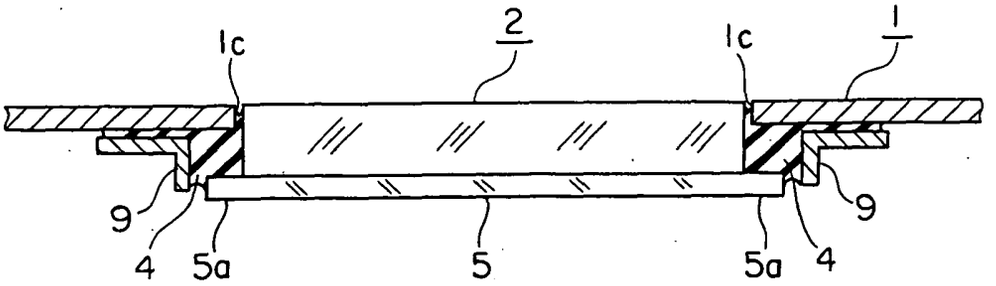

FIG. 6

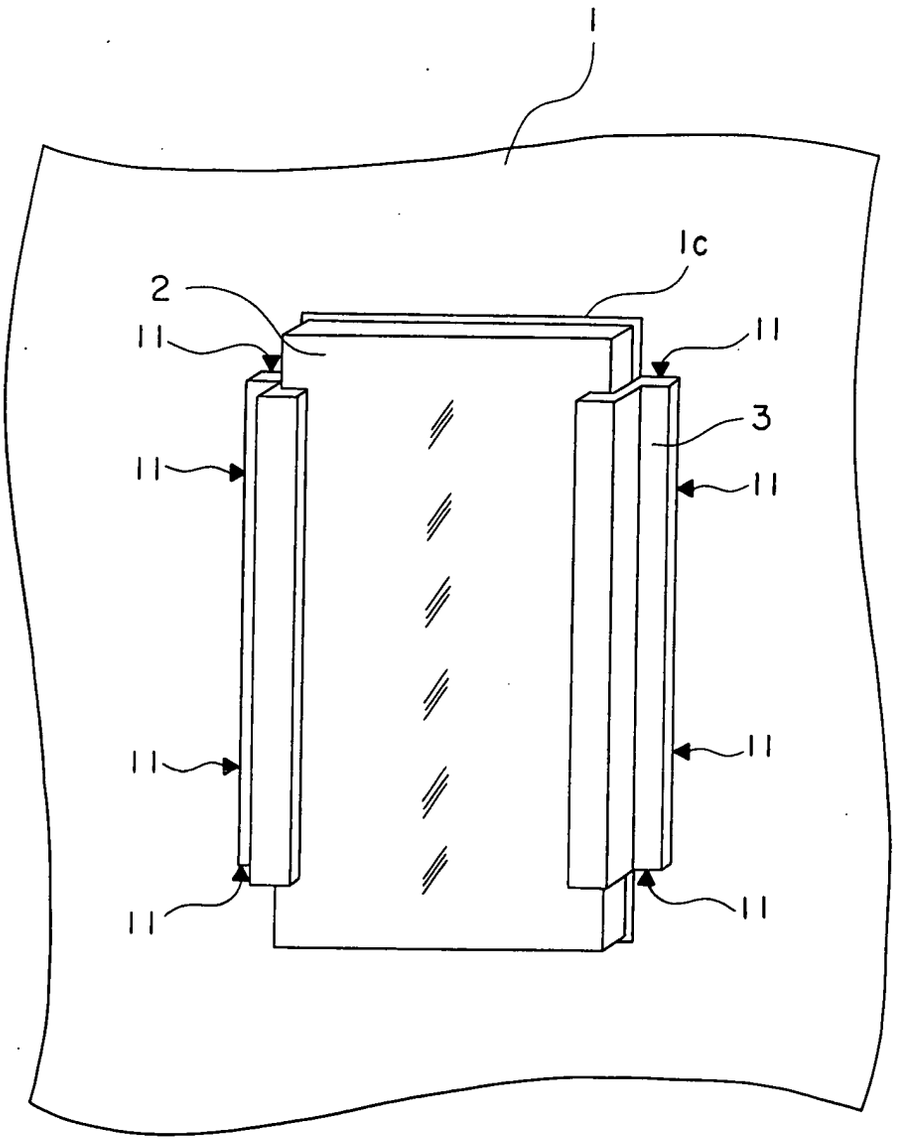

FIG. 7

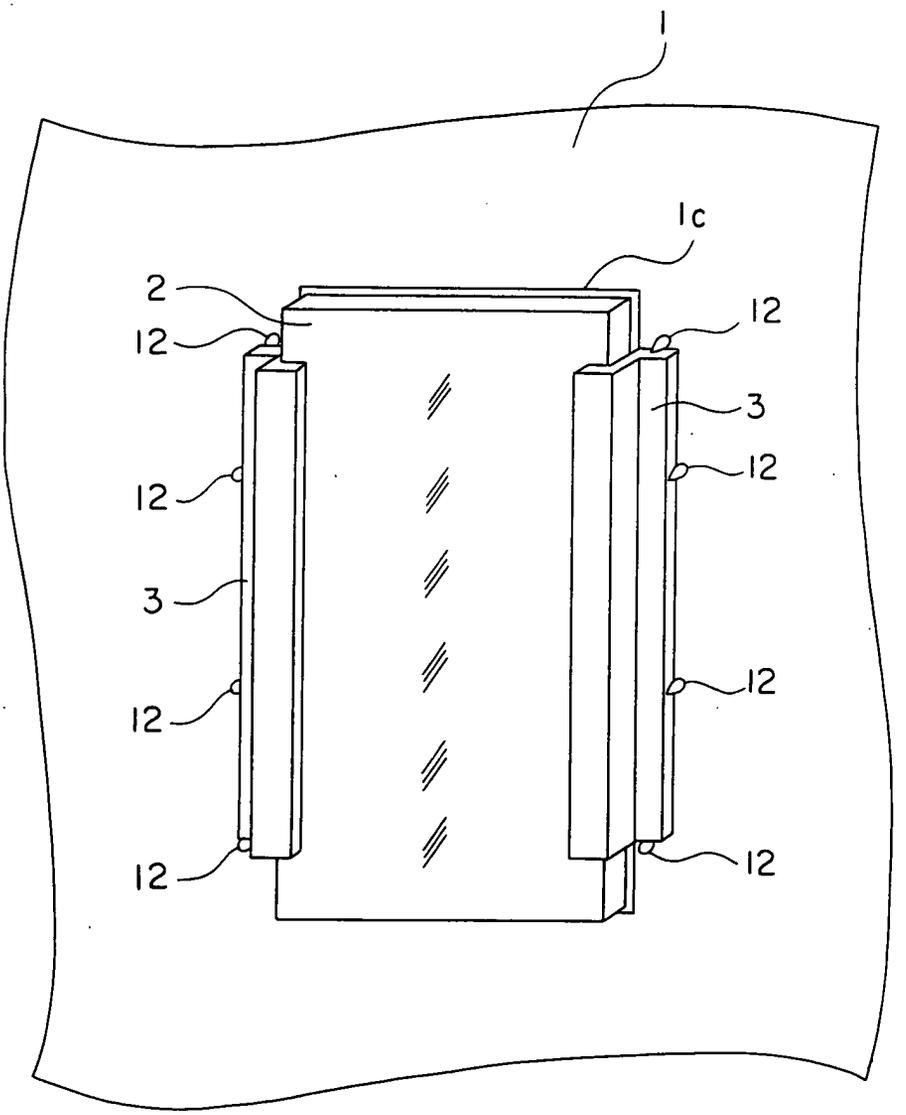

FIG. 8

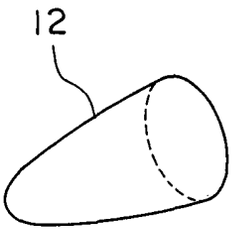

FIG. 9

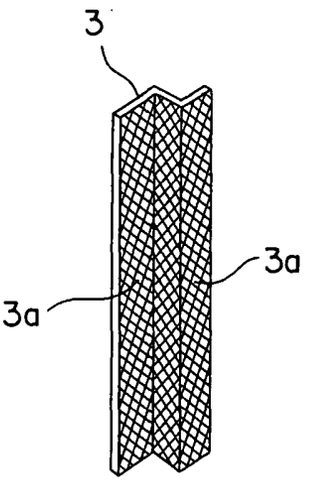

FIG. 10

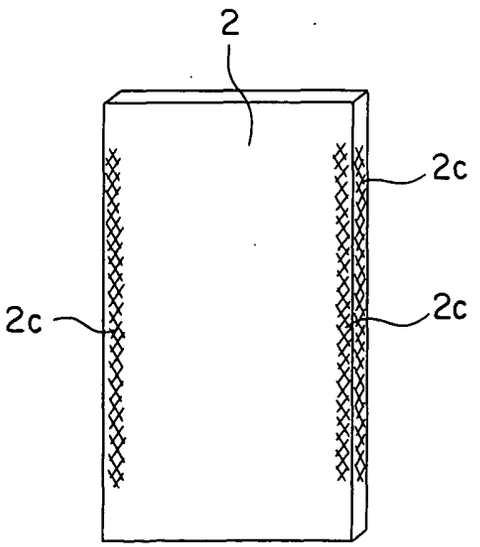

INTERNATIONAL SEARCH REPORT

International application No.
PCT/JP02/11687

A. CLASSIFICATION OF SUBJECT MATTER
Int.Cl[7] B66B13/30

According to International Patent Classification (IPC) or to both national classification and IPC

B. FIELDS SEARCHED

Minimum documentation searched (classification system followed by classification symbols)
Int.Cl[7] B66B13/30, E06B3/56

Documentation searched other than minimum documentation to the extent that such documents are included in the fields searched

Jitsuyo Shinan Koho	1922-1996	Jitsuyo Shinan Toroku Koho	1996-2003
Kokai Jitsuyo Shinan Koho	1971-2003	Toroku Jitsuyo Shinan Koho	1994-2003

Electronic data base consulted during the international search (name of data base and, where practicable, search terms used)

C. DOCUMENTS CONSIDERED TO BE RELEVANT

Category*	Citation of document, with indication, where appropriate, of the relevant passages	Relevant to claim No.
Y	JP 55-111583 A (Mitsubishi Electric Corp.), 28 August, 1980 (28.08.80), (Family: none)	1-10
Y	CD-ROM of the specification and drawings annexed to the request of Japanese Utility Model Application No. 3103/1993(Laid-open No. 55824/1994) (Nippon Sheet Glass Co., Ltd.), 02 August, 1994 (02.08.94), (Family: none)	1-10
Y	Microfilm of the specification and drawings annexed to the request of Japanese Utility Model Application No. 19568/1979(Laid-open No. 118884/1980) (Mitsubishi Electric Corp.), 22 August, 1980 (22.08.80), (Family: none)	3

[x] Further documents are listed in the continuation of Box C. [ ] See patent family annex.

* Special categories of cited documents:
"A" document defining the general state of the art which is not considered to be of particular relevance
"E" earlier document but published on or after the international filing date
"L" document which may throw doubts on priority claim(s) or which is cited to establish the publication date of another citation or other special reason (as specified)
"O" document referring to an oral disclosure, use, exhibition or other means
"P" document published prior to the international filing date but later than the priority date claimed
"T" later document published after the international filing date or priority date and not in conflict with the application but cited to understand the principle or theory underlying the invention
"X" document of particular relevance; the claimed invention cannot be considered novel or cannot be considered to involve an inventive step when the document is taken alone
"Y" document of particular relevance; the claimed invention cannot be considered to involve an inventive step when the document is combined with one or more other such documents, such combination being obvious to a person skilled in the art
"&" document member of the same patent family

Date of the actual completion of the international search	Date of mailing of the international search report
31 July, 2003 (31.07.03)	19 August, 2003 (19.08.03)
Name and mailing address of the ISA/ Japanese Patent Office	Authorized officer
Facsimile No.	Telephone No.

Form PCT/ISA/210 (second sheet) (July 1998)

INTERNATIONAL SEARCH REPORT

International application No.
PCT/JP02/11687

C (Continuation). DOCUMENTS CONSIDERED TO BE RELEVANT

Category*	Citation of document, with indication, where appropriate, of the relevant passages	Relevant to claim No.
Y	JP 2607124 Y2 (Nippon Sharyo Seizo Kaisha, Ltd.), 16 April, 2001 (16.04.01), & JP 6-50921 U	4
Y	JP 6-47887 Y2 (Hitachi Building System Eng. & Service Co., Ltd.), 07 December, 1994 (07.12.94), & JP 2-147480 U	5
A	JP 9-240970 A (Otis Elevator Co.), 16 September, 1997 (16.09.97), (Family: none)	1-10

Form PCT/ISA/210 (continuation of second sheet) (July 1998)