(19) Europäisches Patentamt
European Patent Office
Office européen des brevets

(11) EP 0 855 554 B1

(12) **EUROPEAN PATENT SPECIFICATION**

(45) Date of publication and mention of the grant of the patent:
24.08.2005 Bulletin 2005/34

(51) Int Cl.[7]: **F21V 33/00**, A47B 81/04

(21) Application number: **98830014.1**

(22) Date of filing: **16.01.1998**

(54) **Plate with built-in lamp for supporting the elements of dish rack furniture units**

Platte mit eingebauter Lampe zur Abstützung der Bauteile des Spül- und Lagerkorbs

Plaque de soutien des éléments d'un casier à vaisselle avec lampe encastrée

(84) Designated Contracting States:
DE ES FR IT

(30) Priority: **20.01.1997 IT MC970001 U**

(43) Date of publication of application:
29.07.1998 Bulletin 1998/31

(73) Proprietor: **COMPAGNUCCI - S.P.A.**
I-60030 Santa Maria Nuova (AN) (IT)

(72) Inventor: **Compagnucci, Rossano**
Osimo (AN) (IT)

(74) Representative: **Baldi, Claudio**
Piazza Ghislieri, 3
60035 Jesi (Ancona) (IT)

(56) References cited:
EP-A- 0 599 048 **GB-A- 1 356 206**

Note: Within nine months from the publication of the mention of the grant of the European patent, any person may give notice to the European Patent Office of opposition to the European patent granted. Notice of opposition shall be filed in a written reasoned statement. It shall not be deemed to have been filed until the opposition fee has been paid. (Art. 99(1) European Patent Convention).

EP 0 855 554 B1

Printed by Jouve, 75001 PARIS (FR)

Description

[0001] This patent application concerns a plate, realised in its preferred embodiment in plastic, of the type having the means required to support inserts housed in dish rack furniture units and also provided with a small ceiling lamp which hermetically houses a lamp.

[0002] Modem sectional kitchens consist of wall and base units the latter of which have a working top.

[0003] In order to improve working conditions in the kitchen, modem kitchens have a lamp which illuminates the working surface mounted under the wall units.

[0004] To date it has not been possible to mount these lamps under dish rack wall units in that the same do not have a horizontal bottom wall. Even if in fact removable trays are mounted under the rack, there is always a chance that drops of water may drip down and under the disk rack wall unit.

[0005] In this case the water may drip on to the lamp causing many inevitable problems.

[0006] The purpose of this invention is to permit mounting lamps under dish rack wall units; it is also interesting to note how this was achieved in an extremely price-effective and practical way while ensuring safety and accident prevention measures in full.

[0007] In particular the inventive idea consists of creating a recess to house the lamp on the body of the plates - generally moulded in a single plastic moulding stage - currently used to support all the element of the dish rack.

[0008] These plates are mounted on the inner side panels of the dish rack and consist substantially of strips provided with all the fittings and profiles to support the elements (racks, trays etc.) generally mounted in a dish rack wall unit.

[0009] As explained in the description, this recess consists of a downward sloping wall which acts to all effects as purposes as a cover, realised during the same moulding stage and material as the plate, on the surface of the latter facing the interior of the dish rack wall unit.

[0010] The recess must naturally also be provided with an attachment for a lamp while the electric power cables for the attachment are concealed behind the plate between the plate and the side panel of the wall unit.

[0011] It is evident that thanks to the new plate according to the invention, both the lamp itself and the power cables are protected from water dripping from dishes placed in the dish rack wall unit.

[0012] The lamp is in fact protected by its recess whose cover drains the water downwards; the power supply cables are in turn completely housed and protected on the back of the plate in question in a way that is not only safe and absolutely practically but also particularly efficient from an aesthetical point of view.

[0013] For major clarity the description of the invention continues with reference to the enclosed drawings intended for purposes of illustration and not in a limiting sense wherein:

- figure 1 is a front view of the plate according to the invention;
- figure 2 is a cross-section of the same bracket on a vertical median plane;
- figure 3 is similar to the previous figure but shows a different embodiment of the lamp in the bracket in question.

[0014] With reference to figure 1, the single block plate in question (1) consists generally of an elongated strip whose length is equal to the depth of the side panels of the dish rack wall unit on which it is mounted.

[0015] The upper edge of said plate (1) being provided at its two ends with two rounded tabs (2) projecting upwards and having ends provided with two sleeves (3) projecting inwards towards the unit and in which the pairs of lateral support pins of a glass and dish rack may be fitted securely.

[0016] The base of said tabs (2) are provided with holes (2a) for the screws that secure the plate (1) against the side panel of the wall unit.

[0017] The upper edge of the plate (1) under the two tabs (2) is provided with a horizontal step (4) above which the side edge of a drip tray is fitted and slides.

[0018] One of the longitudinal ends at the base of the plate (1) is also provided with a plug (5) which is press fitted into the end of a tubular rod having a conforming cross-section, which transversally connects and strengthens the side panels of the wall unit.

[0019] All the above components of the plate in question (1) - namely the support sleeves (3), the longitudinal step (4) and fixing plugs (5) are realised on the front face of the plate (1) namely that facing the interior of the unit; the back face of the plate (1), which is substantially concave, is provided with a stiffening rib structure in addition to two horizontal plugs (5a) which are housed into conforming holes realised for this purpose on the side panel of the wall unit.

[0020] As mentioned previously, the main feature of the plate according to the invention (1) is that the same is provided with a projecting longitudinal wall (6) - namely the cover - more or less at the centre of its front face - whose two lateral edges are connected to the front face of the plate (1) by means of respective transverse lateral sides (6a).

[0021] As shown in figures 2 and 3, in the case in question, the sloping wall (6) is connected to the front face of bracket (1) by means of the longitudinal step (4) used to fit a tray.

[0022] Said sloping wall (6) together with the two lateral sides (6a) delimit, on the front of the plate (1) according to the invention, a protection recess housing the lamp (L) which illuminates the working surface under the dish rack.

[0023] The lamp attachment (L) must obviously be mounted in said recess while the power cables of the

attachment are housed completely in the concave back face of the plate (1) before screwing the same to the side panel of the wall unit.

[0024] This inventive idea also provides two different structural solutions for fitting the lamp under the recess; in the preferred embodiment (see figure 2), the electrical contacts and the spring (7) which holds the lamp (L) are fitted on the internal wall of the cover (6).

[0025] In an alternative embodiment (see figure 3), a transparent plastic lid (8) is mounted with a spring latch at the back of the recess in question in order to form a hermetic housing compartment for the lamp; said lid (8), which also includes the attachment spring (7) and relevant electric contacts, ensures that the lamp (L) has a housing which is fully insulated against possible water leaks.

[0026] Over and above the embodiment of the bracket illustrated by way of example in the enclosed drawings, it is evident the use of the ceiling lamp recess according to the invention could be used - within the same inventive concept - on any other type of bracket for dish rack wall units.

[0027] In other words, the same may also be used for brackets without the horizontal step on which the tray slides, or for brackets which, instead of the above sleeves (3), are provided with "U" shaped brackets to support the arms of a dish rack or for brackets without the front plugs (5).

Claims

1. A support plate (1) mounted on dish rack furniture units, of the type consisting of an elongated strip whose front surface is provided with the means (3,4) to support some or all of the elements mounted on dish rack units such as racks, drip trays and stiffening rods, **characterised in that** its front face is provided with a recess delimited at the front by a longitudinal sloped wall (6) and by two transverse lateral sides (6a) provided at the two ends of the wall (6); it being provided that the attachment means (7) for a lamp (L) and relevant power supply contacts are mounted in said recess.

2. A support plate mounted on dish rack units according to claim 1), **characterised in that** the attachment means (7) of the lamp (L) are mounted on the inner face of the above sloped wall (6).

3. A support plate mounted on dish rack units according to claim 1, **characterised in that** the attachment means of the lamp (L) are mounted in a transparent lid (8) fitted with latch spring on the back of the recess delimited by said wall (6).

Patentansprüche

1. Halterungsplatte (1) zur Montage in Geschirrabtropfschränken, bestehend aus einer Leiste mit länglicher Form, auf deren Vorderseite geeignete Mittel (3, 4) zur Halterung einiger oder aller in den Abtropfschränken eingesetzten Elemente wie Gitter, Schalen oder Versteifungsquerstangen herausgearbeitet sind, **dadurch gekennzeichnet, dass** sie an ihrer Frontseite eine Nische umfasst, die vorn durch eine geneigte Längswand (6) und durch zwei seitliche Querwände (6a) begrenzt ist, die an den beiden Enden der Wand (6) vorgesehen sind, wobei vorgesehen ist, dass innerhalb dieser Nische die Mittel zum Einhängen (7) einer Lampe (L) und der entsprechenden Elektrokontakte zur Stromversorgung montiert werden.

2. Halterungsplatte zur Montage in Geschirrabtropfschränken gemäß Anspruch 1, **dadurch gekennzeichnet, dass** die Mittel (7) zum Einhängen der Lampe (L) auf der Innenseite der oben genannten geneigten Wand (6) montiert sind.

3. Halterungsplatte zur Montage in einem Geschirrabtropfschrank gemäß Anspruch 1, **dadurch gekennzeichnet, dass** die Mittel zum Einhängen der Lampe (L) im Innern eines transparenten Deckels (3) montiert sind, der auf der Rückseite der Nische eingeklinkt ist, die von der oben genannten geneigten Wand (6) begrenzt wird.

Revendications

1. Plaque de support (1) à monter dans des meubles égouttoirs, du type constitué d'une lame ayant forme allongée, sur la face de laquelle sont réalisés les moyens (3, 4) idoines à supporter certains ou tous les éléments utilisés dans les meubles égouttoirs, tels que : clayettes, plateaux récupérateurs d'eau et traverses de raidissement, **caractérisée en ce qu'**elle incorpore, en correspondance de sa face avant, une niche délimitée antérieurement par une petite cloison inclinée et longitudinale (6) et par deux bords latéraux et transversaux (6a) prévus aux deux extrémités de la dite petite cloison (6) ; étant prévu qu'à l'intérieur de cette niche soient montés les moyens d'accrochage (7) pour une lampe (L), ainsi que les relatifs contacts pour son alimentation.

2. Plaque de support à monter dans des meubles égouttoirs, selon la revendication 1, **caractérisée en ce que** les moyens d'accrochage (7) de la lampe (L) soient montés sur la face interne de la dite petite cloison (6).

3. Plaque de support à monter dans des meubles égouttoirs, selon la revendication 1), **caractérisée en ce que** les moyens d'accrochage de la lampe (L) soient montés à l'intérieur d'un couvercle transparent (8) monté à déclic sur la face arrière de la niche délimitée par la dite petite cloison (6).

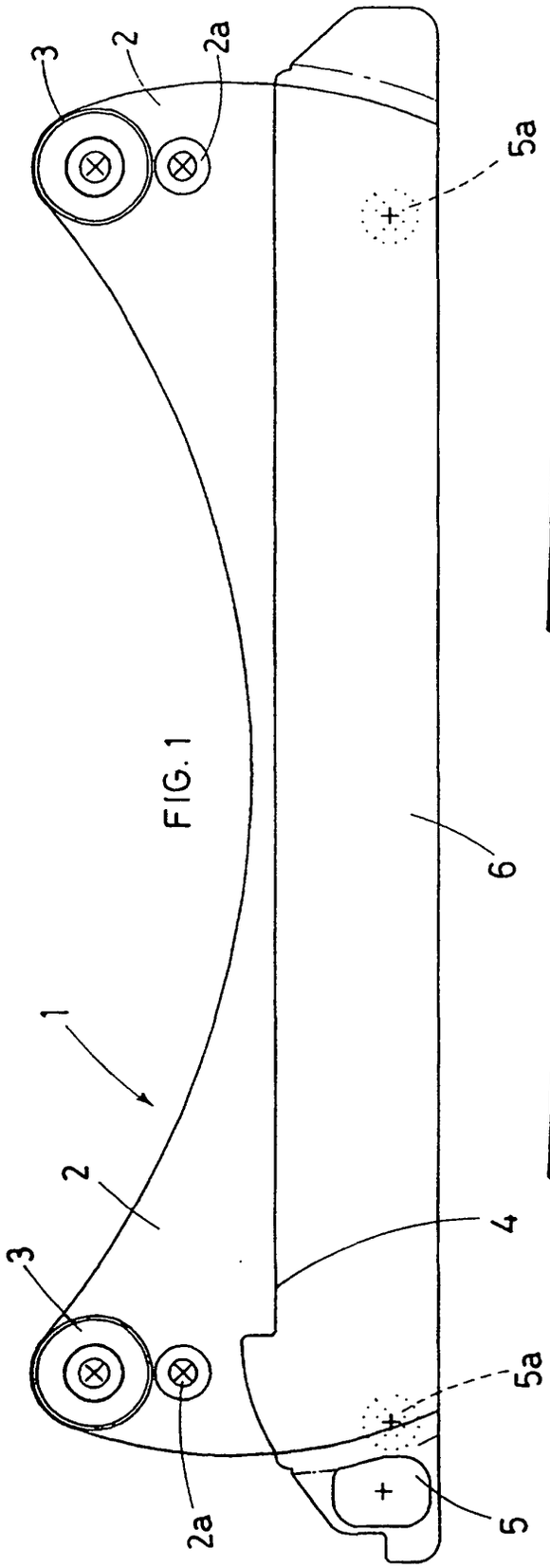

FIG. 1

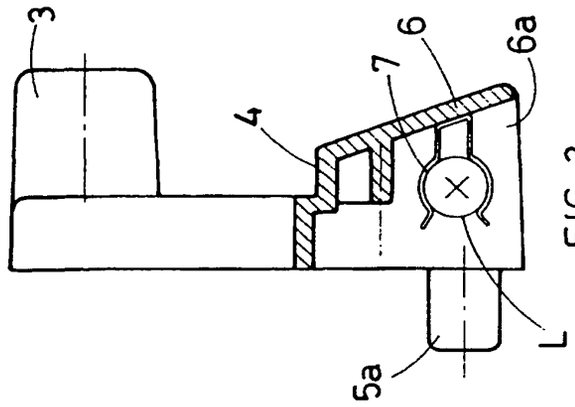

FIG. 2

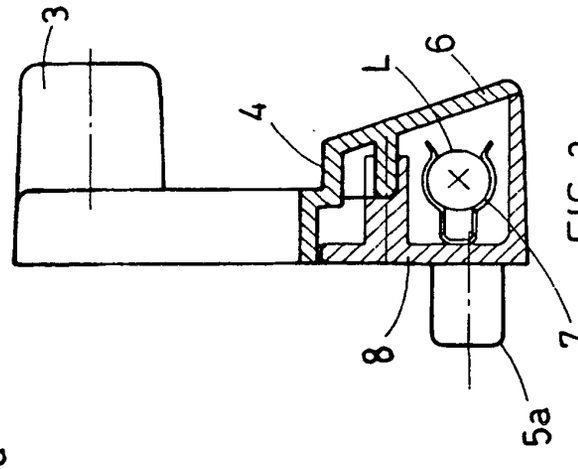

FIG. 3

TAV. 1-1