(19) Europäisches Patentamt
European Patent Office
Office européen des brevets

(11) EP 1 199 531 B1

(12) **EUROPEAN PATENT SPECIFICATION**

(45) Date of publication and mention of the grant of the patent:
24.08.2005 Bulletin 2005/34

(51) Int Cl.[7]: **F25D 17/04**, F25D 17/06

(21) Application number: **00125785.6**

(22) Date of filing: **24.11.2000**

(54) **Cold air supplying device for refrigerator**

Kaltluftzufuhrvorrichtung für einen Kühlschrank

Dispositif d'alimentation en air froid pour réfrigérateur

(84) Designated Contracting States:
ES FR GB IT NL TR

(30) Priority: **18.10.2000 KR 2000029040**
18.10.2000 KR 2000029041

(43) Date of publication of application:
24.04.2002 Bulletin 2002/17

(73) Proprietor: **Daewoo Electronics Corporation**
Seoul (KR)

(72) Inventor: **Gang,Lyu,**
c/o Daewoo Electronics Co., Ltd
Jung-Gu, Seoul (KR)

(74) Representative:
von Samson-Himmelstjerna, Friedrich et al
SAMSON & PARTNER
Widenmayerstrasse 5
80538 München (DE)

(56) References cited:
EP-A- 0 828 121 **US-A- 5 209 073**
US-A- 6 073 458

- **PATENT ABSTRACTS OF JAPAN vol. 2000, no. 10, 17 November 2000 (2000-11-17) -& JP 2000 205733 A (MITSUBISHI ELECTRIC CORP), 28 July 2000 (2000-07-28)**

Note: Within nine months from the publication of the mention of the grant of the European patent, any person may give notice to the European Patent Office of opposition to the European patent granted. Notice of opposition shall be filed in a written reasoned statement. It shall not be deemed to have been filed until the opposition fee has been paid. (Art. 99(1) European Patent Convention).

EP 1 199 531 B1

Printed by Jouve, 75001 PARIS (FR)

Description

[0001] The present invention relates to a cool air supplying device for refrigerator; and, more particularly, to a cool air supplying device for uniformly supplying cool air to the refrigerating compartment of an air circulation type refrigerator.

[0002] A conventional refrigerator comprises a cabinet having a freezing compartment and a refrigerating compartment, and a refrigerating system for providing cool air. The refrigerating system includes a compressor, a condenser, a pressure reducing device and an evaporator. A refrigerant circulates in the refrigerating system to thereby provide cool air.

[0003] The refrigerating system is configured to supply cool air to the freezing compartment and the refrigerating compartment via a cool air supplying device and an example of such a cool air supplying device is shown in Figs. 1 and 2. Typically, an air-circulation type refrigerator comprises a cabinet 1 which includes a freezing compartment 3 and a refrigerating compartment 5. Further, a compressor (not shown) is arranged in the lower portion of the cabinet 1 and an evaporator 7 is installed in the upper portion of the cabinet 1 and behind the freezing compartment 3.

[0004] The cool air supplying device includes a fan 10 installed above the evaporator 7 and a duct 20 disposed in front of the fan 10. Cool air generated by the evaporator 7 is blown by the fan 10 into the freezing compartment 3 and also into the refrigerating compartment 5 through the duct 20. As shown in Fig. 2, the duct 20 has an opening 22 through which the cool air enters into the duct 20, an intermediate chamber 24 for temporarily storing the cool air and a passage 25 through which the intermediate chamber 24 communicates with the refrigerating compartment 5. The intermediate chamber 24 directly communicates with the freezing compartment 3 via a louver 9 such that the cool air entered through the opening 22 can be directly supplied into the freezing compartment 3. The passage 25 has a main passage 25a and two branch passages 25b divided from the main passage 25a. The cool air is delivered to the refrigerating compartment 5 through the branch passages 25b along both sides of the refrigerating compartment 5.

[0005] A damper 30 is provided for controlling the amount of the cool air flowing through the main passage 25a. The damper 30 has a sliding plate 31 movable in a direction traverse to the main passage 25a, a baffle 32 formed on the sliding plate 31 and a knob 33. The baffle 32 is configured to be arranged in the main passage 25a such that a cross-sectional area of the main passage 25a can be changed by moving the sliding plate 31. The movement of the sliding plate 31 is controlled by using the knob 33 protruded into the freezing compartment 3. In such a configuration, one can determine the amount of the cool air, which flows through the main passage 25a to be supplied into the refrigerating compartment, by changing the cross-sectional area of the main passage 25a.

[0006] Cool air generated by the evaporator 7 is delivered into the intermediate chamber 24 by the fan 10. Then, partial amount of the cool air is supplied into the freezing compartment 3 through a louver 9 and the remaining part of the cool air is supplied into the refrigerating compartment 5 through the main passage 25a and the branch passages 25b. The amount of the cool air supplied to the refrigerating compartment 5 through the main passage 25a is controlled by the damper 30.

[0007] However, in such a conventional cool air supplying device, the supplement of the cool air to the refrigerating compartment 5 is not performed uniformly. Since the baffle 32 of the damper 30 is extended from a side of the main passage 25a towards the other side thereof, the flow of the cool air is biased from the center of the main passage 25a, thereby resulting in an unbalanced flow of the cool air such that the amount of the cool air flowing through one of the branch passage 25b becomes greater than that flowing through the other. Subsequently, the supplement of the cool air into the refrigerating compartment 5 is not performed uniformly. This results in a non-uniformity in local temperature in the refrigerating compartment 5 and the foods stored therein can be over-chilled or under-chilled. This phenomenon becomes more severe when the volume of the refrigerating compartment 5 is large.

[0008] Further, since the amount and the flow direction of the cool air passing through the main passage 25a is rather considerably changed by small movement of the baffle 32, the supplement of the cool air to the refrigerating compartment 5 is not controlled accurately.

[0009] USP-5,209,073 discloses a cooling device having a refrigeration chamber and a freezer chamber wherein the freezer chamber and the refrigeration chamber are connected with refrigerated pressurised air by air flow passageways. The air flow is controlled by motorised valves which are operated by temperature sensors. JP 2000 205733 A discloses a multi compartment refrigerator, wherein the refrigerating compartments are interconnected through a chill passage wherein the distribution of the chilled air is controlled by means of an air volume regulator disposed in one chill passage.

[0010] It is, therefore, an object of the present invention to provide a simple cool air supplying device for refrigerator wherein the supplement of cool air to the refrigerating compartment is performed uniformly to thereby substantially remove the non-uniformity in the local temperature therein.

[0011] It is another object of the present invention to provide a cool air supplying device for refrigerator wherein the supplement of cool air to the refrigerating compartment is controlled accurately.

[0012] In accordance with one aspect of the present invention, there is provided a cool air supplying device for refrigerator which comprises an evaporator, a fan, a duct system including a first passage and a second pas-

sage, the first passage and the second passage being separated from each other, and a damper arranged in the first passage and the second passage for controlling the amount of the cold air flowing through the passages, wherein the damper is arranged slidably in a direction traverse to the passages and includes a first set of baffles and a second set of baffles for controlling cross-sectional areas of the first passage and the second passage, respectively.

[0013] The above and other objects and features of the present invention will become apparent from the following description given in conjunction with the accompanying drawings, wherein:

Figure 1 is a cross-sectional side view of an upper portion of a conventional refrigerator showing the configuration of a cool air supplying device of prior art;

Figure 2 shows a cross-sectional view along the line II-II of Fig. 1;

Figure 3 illustrates a cool air supplying device in accordance with an embodiment of the present invention;

Figure 4 presents a cross-sectional view along the line IV-IV of Fig. 3.

[0014] The preferred embodiments of the present invention will now be described in detail with reference to the accompanying drawings.

[0015] Fig. 3 illustrates a cool air supplying device in accordance with an embodiment of the present invention and Fig. 4 presents a cross-sectional view along the line IV-IV of Fig. 3. The refrigerator shown in Fig. 3 comprises a cabinet 1 which has a freezing compartment 3 and a refrigerating compartment. A compressor (not shown) is arranged below the cabinet 1 and an evaporator 7 is installed above the cabinet 1 and behind the freezing compartment 3.

[0016] The cool air supplying device shown in Fig. 3 includes a fan 10 installed above the evaporator 7 and a duct 20 disposed in front of the fan 10. Cool air generated by the evaporator 7 is blown by the fan 10 into the freezing compartment 3 and the refrigerating compartment 5 through the duct 20. The duct 20 has an opening 22 through which the cool air enters into the duct 20, an intermediate chamber 24 for temporarily storing the cool air and a first passage 27a and a second passage 27b through which the intermediate chamber 24 communicates with the refrigerating compartment 5. The intermediate chamber 24 directly communicates with the freezing compartment 3 such that the cool air entered through the opening 22 can be directly supplied into the freezing compartment 3. Each side of the intermediate chamber 24 and the refrigerating compartment 5 communicates through the first passage 27a and the second passage 27b, respectively. Preferably, these passages 27a, 27b are arranged substantially symmetrically with respect to the vertical center line of the intermediate chamber 24 to thereby uniformly supply the cool air from the intermediate chamber 24 to both sides of the refrigerating compartment 5.

[0017] A damper 30 is provided in the passages 27a, 27b for controlling the amount of the cool air flowing therethrough. As shown in Figs. 3 and 4, the damper 30 has a sliding plate 35 movable in a direction traverse to the passages 27a, 27b, a first set of baffles 36, a second set of baffles 37, both sets being formed on one side of the sliding plate 35 and a knob 38 formed on the other side thereof.

[0018] The first set of baffles 36 has a main baffle 36a and an auxiliary baffle 36b and is disposed in the first passage 27a. The second set of baffles 37 has a main baffle 37a and an auxiliary baffle 37b and is disposed in the second passage 27b. Main baffles 36a, 37a have widths as large as those of respective passages 27a, 27b to thereby almost completely block the cool air flowing through the respective passages. On the other hand, auxiliary baffles 36b, 37b have widths smaller than those of the passages to thereby partially block the cool air flowing through the respective passages. Each of the passages 27a, 27b can have a various cross-sectional area by using the main baffles 36a, 37a and the auxiliary baffles 36b, 37b in combination. That is, the cross-sectional area of the passage can be adjusted by moving the sliding plate 35, thereby allowing a desired amount of cool air to pass through the passage.

[0019] The knob 38 is configured to protrude through the louver 9 into the freezing compartment 3 such that one can have access from the freezing compartment 3 to the knob 38 to move the sliding plate 35. The knob 38 may be designed to have three operating positions such as "half" A, "strong" B and "very weak" C, as shown in Fig. 4. Further, the knob may have another operating position such as "weak" located between the positions B and C. Subsequently, the amount of the cool air flowing through the passage can be controlled more accurately.

[0020] The first set of baffles 36 and the second set of baffles may have a configuration substantially identical to each other and thereby the amount of cool air passing through one passage may substantially be same with that passing through the other. Otherwise, they may have a configuration different from each other and thereby the amount of cool air passing through one passage may be different from that passing through the other.

[0021] The function and effect of the above cool air supplying device will be described hereinafter.

[0022] First, cool air is generated by the evaporator 7 and blown into the intermediate chamber 24 of the duct 20 by the fan 10. Partial amount of the cool air which enters into the intermediate chamber 24 is supplied into the freezing compartment 3 through the louver 9 and remaining part of the cool air is supplied into the refrigerating compartment 5 through passages 27a, 27b. The amount of cool air passing through each of the passages

27a, 27b is controlled independently by the damper 30. Also, the supplement of the cool air to the refrigerating compartment 5 is performed uniformly.

[0023] In the above embodiment of the present invention, the supplement of the cool air into the refrigerating compartment can be performed uniformly by using two separated passages extending from the intermediate chamber to the refrigerating compartment. The amount of the cool air supplied into the refrigerating compartment can be accurately controlled by adjusting the cross-sectional area of each passage by a set of baffles.

[0024] Although the invention has been shown and described with respect to the preferred embodiments, it will be understood by those skilled in the art that various changes and modifications may be made without departing from the scope of the invention as defined in the following claims.

Claims

1. A cool air supplying device for a refrigerator (1), comprising:

an evaporator (7) for generating cool air;
a fan (10) for blowing the cool air into a freezing compartment (3) and a refrigerating compartment (5) of the refrigerator (1);
a duct (20) for delivering the cool air into the freezing compartment (3) and the refrigerating compartment (5), the duct includes a first passage (27a) and a second passage (27b) for delivering the cool air into the refrigeration compartment (5) which are separated from each other; and
a damper (30) arranged in the first passage (27a) and the second passage (27b) for controlling an amount of the cool air flowing through each passage, **characterised in that** the damper (30) is arranged slidably in a direction traverse to the passages (27a, 27b) and includes a first set of baffles (36) and a second set of baffles (37) for controlling respective cross-sectional areas of the first passage (27a) and the second passage (27b), respectively.

2. The device of claim 1, wherein each of the first set of baffles (36) and the second set of baffles (37) has a main baffle (36a, 37a) and an auxiliary baffle (36b, 37b), the main baffle (36a, 37a) having a width substantially identical to that of a corresponding passage (27a, 27b) and the auxiliary baffle (36b, 37b) having a width smaller than that of a corresponding passage (27a, 27b).

3. The device of claim 1 or 2, wherein the first set of baffles (36) and the second set (37) of baffles have the same configuration to each other, whereby the amount of the cool air flowing through the first passage (27a) is substantially identical to that flowing through the second passage (27b).

4. The device of claim 1 or 2, wherein the first set of baffles (36) and the second set of baffles (37) have different configuration from each other, whereby the amount of the cool air flowing through the first passage (27a) is different from that flowing through the second passage (27b).

Patentansprüche

1. Kühlluftzufuhrvorrichtung für einen Kühlschrank (1), aufweisend:

einen Verdampfer (7) zum Erzeugen von Kühlluft;
einen Ventilator (10) zum Einblasen der Kühlluft in ein Gefrierfach (3) und ein Kühlfach (5) eines Kühlschranks (1);
einen Kanal (20) zum Leiten der Kühlluft in das Tiefkühlfach (3) und das Kühlfach (5), wobei der Kanal zum Führen der Kühlluft in das Kühlfach (5) einen ersten und zweiten Abschnitt (27a, 27b) aufweist, die getrennt voneinander angeordnet sind; und
einen Schieber (30), der im ersten Abschnitt (27a) und im zweiten Abschnitt (27b) angeordnet ist, um die durch jeden Abschnitt fließende Luftmenge zu steuern, **dadurch gekennzeichnet, daß**
der Schieber (30) quer zu den Abschnitten (27a, 27b) verschiebbar angeordnet ist und einen ersten Satz Drosselscheiben (36) und einen zweiten Satz Drosselscheiben (37) zum Einstellen der jeweiligen Querschnittsfläche des ersten und zweiten Abschnitts (27a, 27b) aufweist.

2. Vorrichtung nach Anspruch 1, bei welcher jeder Satz Drosselscheiben (36, 37), eine Hauptdrosselscheibe (36a, 37a) und eine Hilfsdrosselscheibe (36b, 37b) aufweist, wobei die Hauptdrosselscheibe (36a, 37a) in ihrer Breite im wesentlich identisch mit der des entsprechenden Abschnitts (27a, 27b) ist, und die Hilfsdrosselscheibe (36b, 37b) eine Breite aufweist, die kleiner ist als die des entsprechenden Abschnitts (27a, 27b).

3. Vorrichtung nach Anspruch 1 oder 2, bei welcher der erste Satz Drosselscheiben (36) und der zweite Satz (37) Drosselscheiben gleich zueinander angeordnet sind, wobei die Kühlluftmenge, welche durch den ersten Abschnitt (27a) fließt, im wesentlichen identisch mit der durch den zweiten Abschnitt (27b) fließenden Menge ist.

4. Vorrichtung nach Anspruch 1 oder 2, bei welcher der erste Satz Drosselscheiben (36) und der zweite Satz Drosselscheiben (37) unterschiedlich konfiguriert sind, wobei die durch den ersten Abschnitt (27a) fließende Kühlluftmenge von der durch den zweiten Abschnitt (27b) fließenden Menge abweicht.

Revendications

1. Dispositif d'alimentation en air frais pour un réfrigérateur (1), comprenant :

- un évaporateur (7) pour générer de l'air frais ;
- un ventilateur (10) pour souffler l'air frais dans un compartiment de congélation (3) et dans un compartiment de réfrigération (5) du réfrigérateur (1) ;
- un conduit (20) pour délivrer l'air frais dans le compartiment de congélation (3) et dans le compartiment de réfrigération (5), le conduit comprend un premier passage (27a) et un second passage (27b) pour délivrer l'air frais dans le compartiment de réfrigération (5), qui sont séparés l'un de l'autre ; et
- un registre (30) agencé dans le premier passage (27a) et dans le second passage (27b) pour contrôler une quantité d'air frais qui s'écoule dans chaque passage, **caractérisé en ce que** :
  - le registre (30) est agencé de manière coulissante dans une direction transversale par rapport aux passages (27a, 27b) et comprend un premier ensemble de déflecteurs (36) et un second ensemble de déflecteurs (37) pour contrôler respectivement les surfaces transversales respectives du premier passage (27a) et du second passage (27b).

2. Dispositif selon la revendication 1, dans lequel chacun parmi le premier ensemble de déflecteurs (36) et le second ensemble de déflecteurs (37) comporte un déflecteur principal (36a, 37a) et un déflecteur auxiliaire (36b, 37b), le déflecteur principal (36a, 37a) ayant une largeur sensiblement identique à celle d'un passage correspondant (27a, 27b) et le déflecteur auxiliaire (36b, 37b) ayant une largeur inférieure à celle d'un passage correspondant (27a, 27b).

3. Dispositif selon la revendication 1 ou 2, dans lequel le premier ensemble de déflecteurs (36) et le second ensemble de déflecteurs (37) ont la même configuration l'un par rapport à l'autre, moyennant quoi la quantité d'air frais qui s'écoule dans le premier passage (27a) est sensiblement identique à celle qui s'écoule dans le second passage (27b).

4. Dispositif selon la revendication 1 ou 2, dans lequel le premier ensemble de déflecteurs (36) et le second ensemble de déflecteurs (37) ont des configurations différentes l'un de l'autre, moyennant quoi la quantité d'air frais qui s'écoule dans le premier passage (27a) est différente de celle qui s'écoule dans le second passage (27b).

FIG. 1
(PRIOR ART)

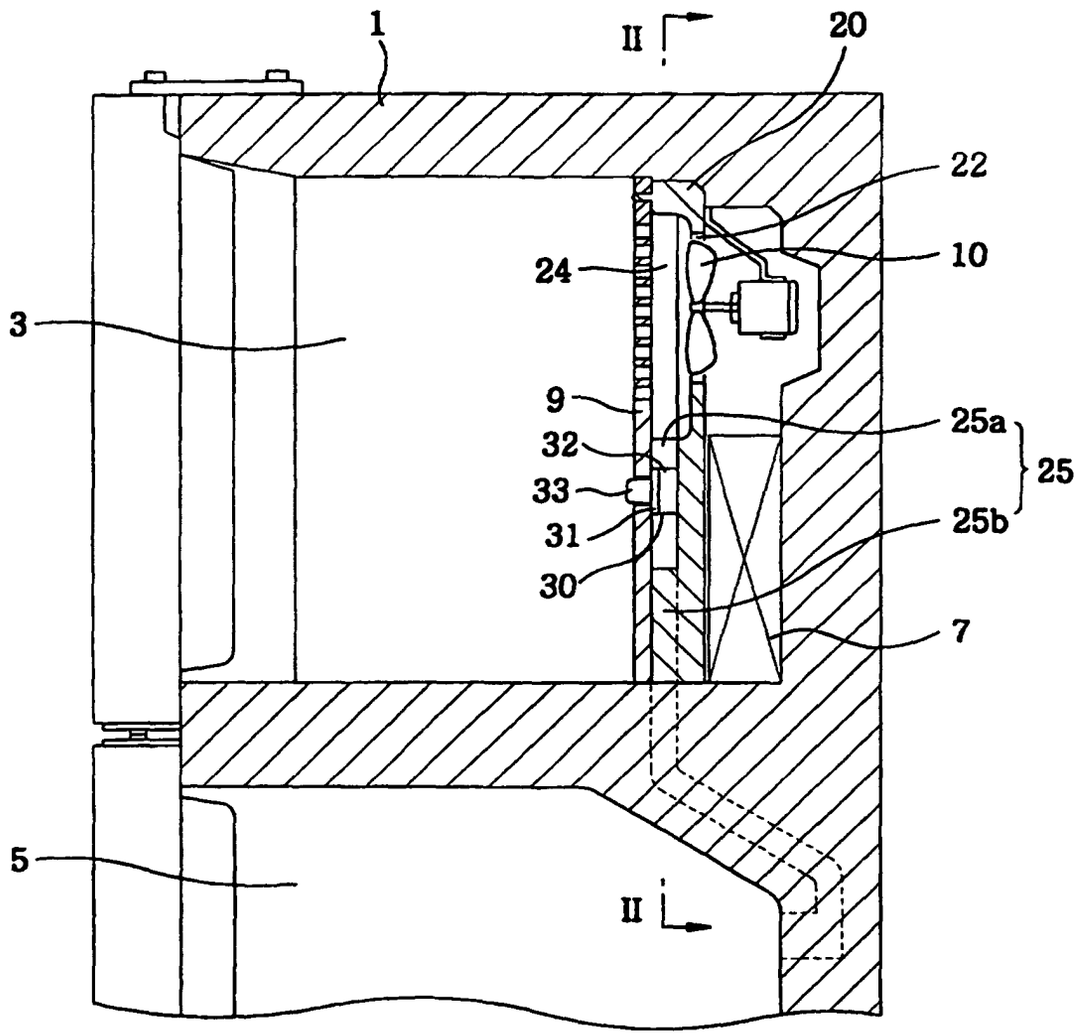

FIG. 2
(PRIOR ART)

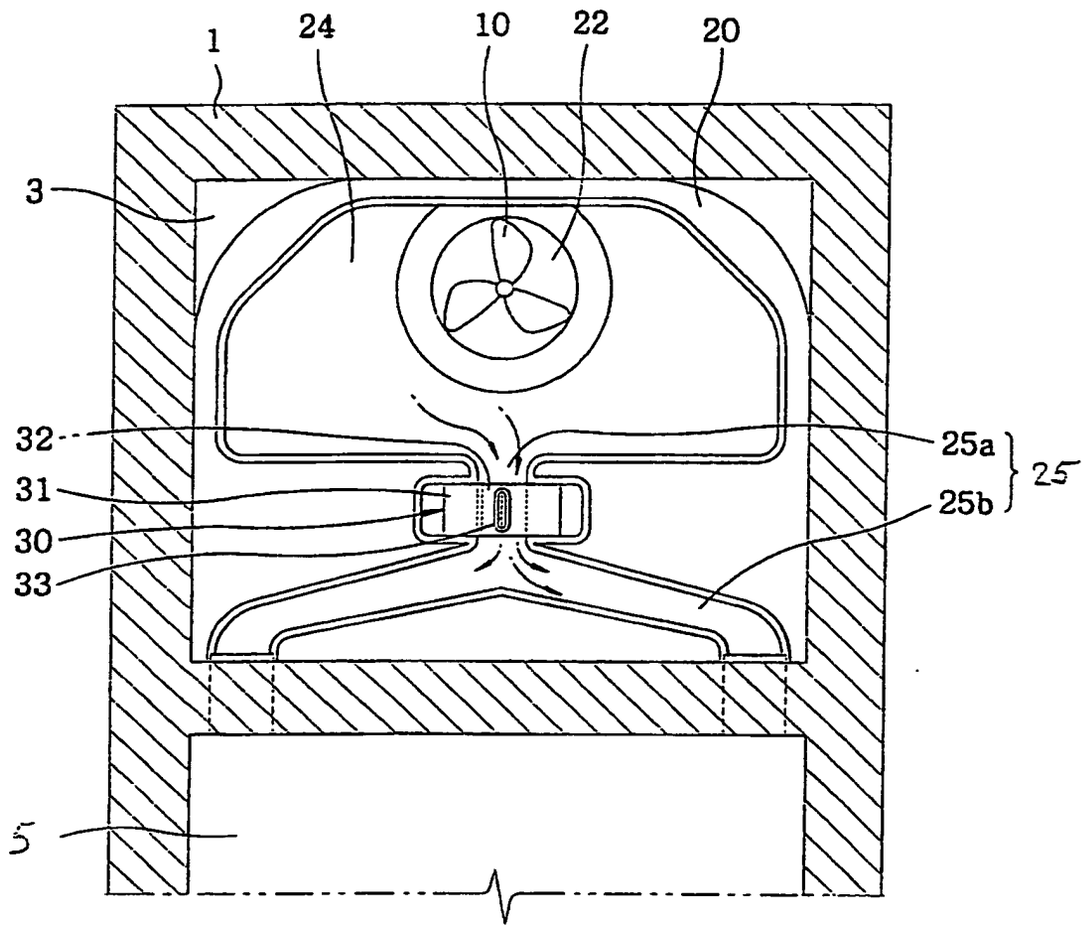

FIG. 3

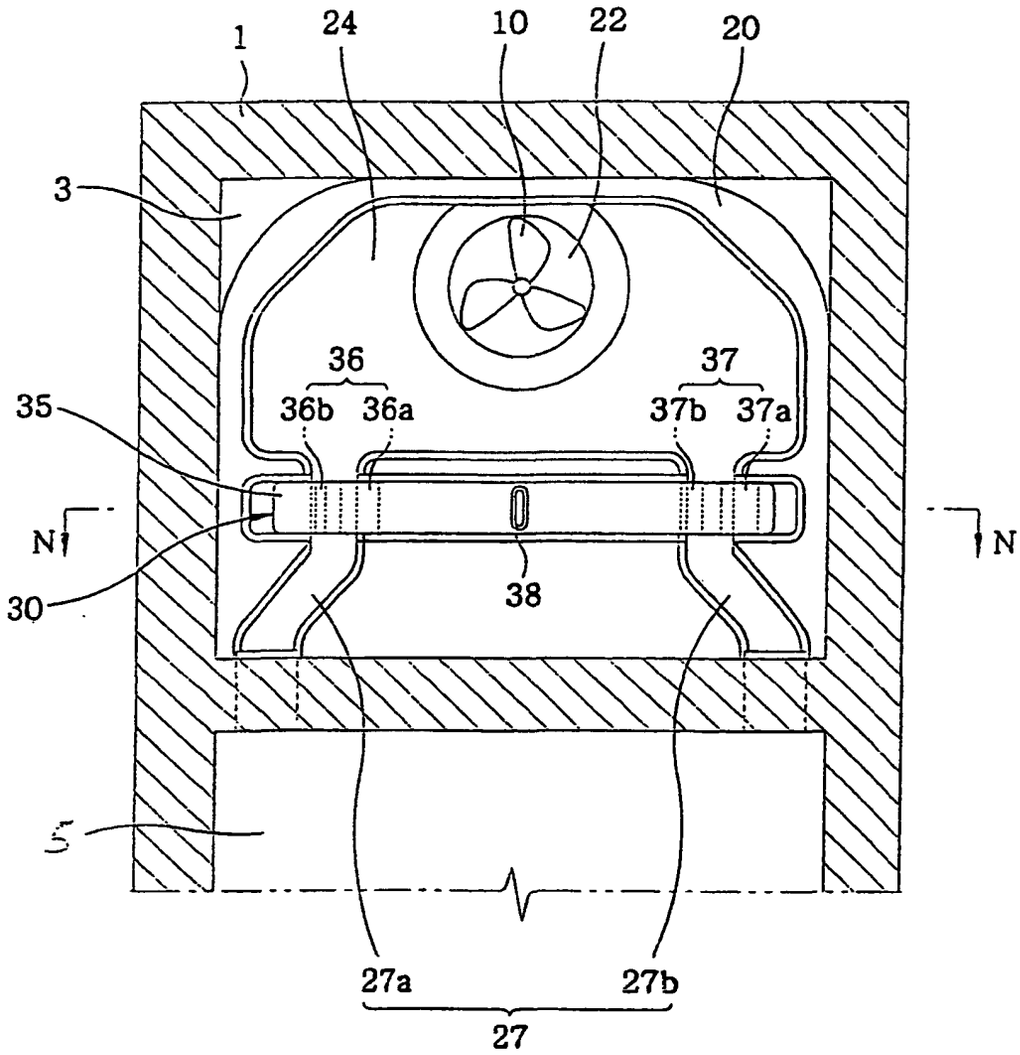
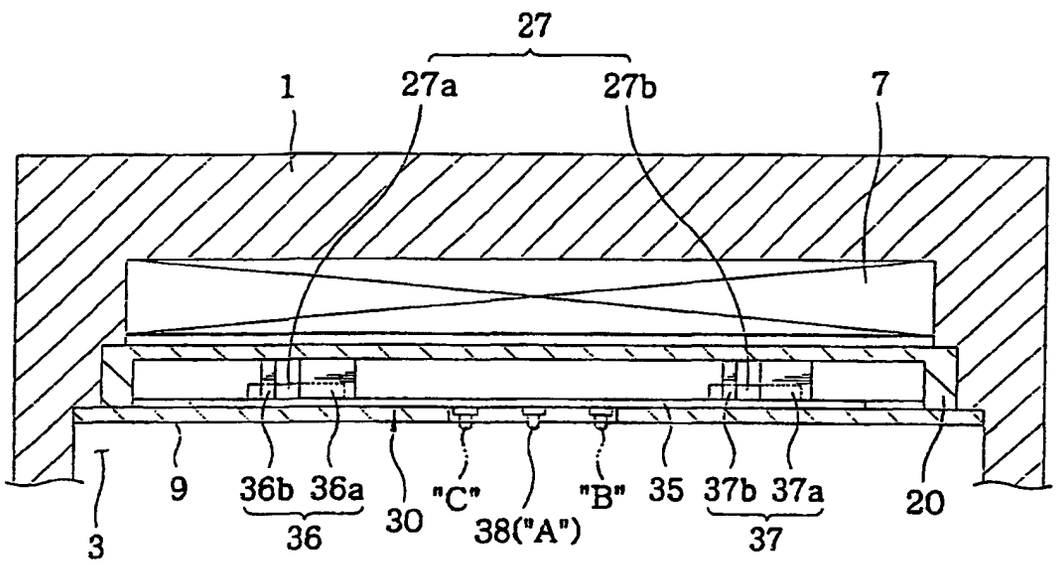
FIG. 4