(19) Europäisches Patentamt
European Patent Office
Office européen des brevets

(11) **EP 1 393 642 B1**

(12) **EUROPEAN PATENT SPECIFICATION**

(45) Date of publication and mention of the grant of the patent:
04.07.2007 Bulletin 2007/27

(51) Int Cl.:
A42B 3/22 *(2006.01)*

(21) Application number: **02425545.7**

(22) Date of filing: **02.09.2002**

(54) **Protective helmet with sun visor, particularly for motorcyclists**

Schutzhelm mit Sonnenblende, insbesondere für Motorradfahrer

Casque protecteur, en particulier pour pilotes de moto, muni d'une visière pare-soleil

(84) Designated Contracting States:
AT BE BG CH CY CZ DE DK EE ES FI FR GB GR IE IT LI LU MC NL PT SE SK TR

(43) Date of publication of application:
03.03.2004 Bulletin 2004/10

(73) Proprietor: **Osbe Srl**
10024 Moncalieri (TO) (IT)

(72) Inventor: **Crivello, Osvaldo**
18100 Imperia (IT)

(74) Representative: **Robba, Pierpaolo et al**
INTERPATENT S.R.L.
Via Caboto No. 35
10129 Torino (IT)

(56) References cited:
FR-A- 2 532 528
FR-A- 2 593 035
GB-A- 2 014 432

Note: Within nine months from the publication of the mention of the grant of the European patent, any person may give notice to the European Patent Office of opposition to the European patent granted. Notice of opposition shall be filed in a written reasoned statement. It shall not be deemed to have been filed until the opposition fee has been paid. (Art. 99(1) European Patent Convention).

EP 1 393 642 B1

Description

[0001] The present invention refers to a protective helmet, in particular for motorcyclists, provided with a transparent visor able to protect the user from the wind and from the atmospheric agents, and with a second darkened visor able to protect the user from the direct sunlight.

[0002] In particular, the invention concerns the mechanism allowing the user to shift said sun visor from a use position to a non-use position and vice versa.

[0003] It is clear that the direct sunlight in the eyes of a motorcyclist can result disturbing, if not dangerous, since the motorcyclist could be dazzled and could risk, as a consequence, to have an accident.

[0004] In order to overcome said inconvenience, protective helmets provided with a coloured sun visor able to filter the sunlight have been developed in the past.

[0005] It is likewise evident that it should be possible to shift said sun visor from a use position to a non-use position and vice versa easily, since it can happen that the user rapidly passes from highly illuminated zones to shadow zones. It is the case, for instance, of a motorcyclist travelling in a sunny day on a motorway along which tunnels are present.

[0006] The positioning mechanism of said sun visor must be, as a consequence, simple and easily accessible in whatever drive conditions.

[0007] Patent publication FR-A-2532528 discloses a protective helmet, in particular for fire-fighters, policemen etc., arranged for protecting the upper portion of a user head. The known helmet comprises an external visor and an internal visor, both of them arranged to at least partially shift internally to the shell of the helmet by pivoting around a common pair of pins. Patent publication GB-A-2014432 discloses a device for moving a visor for an observation aperture in the shell of the helmet. The known moving device comprises a slider actautable for lifting the visor externally to the opening.

[0008] The German patent DE 4416921, in the name of Schuberth-Werk GmbH & Co KG, describes a protective helmet provided with an external transparent visor and with a second internal transparent sun visor that can be lowered to occupy part of the user's field of view, or raised outside said field of view by acting on an activation element arranged on the front part of the helmet above the observation aperture provided in said helmet.

[0009] This solution implies clear drawbacks: firstly, the actuation element results to be inaccessible if the external transparent sun visor is raised, also only partially; secondly, since said actuation element is in a central position, it could be natural to the user to act on it with his/her right hand, so leaving the accelerator and not fulfilling the conditions for a safe drive any more.

[0010] Besides, the positioning device of the described sun visor results to be complex and, as a consequence, its manufacturing could imply an excessive increase in the production costs of the protective helmet including said device.

[0011] It is a main object of the present invention to overcome the above mentioned drawbacks by providing a protective helmet comprising a sun visor provided with a positioning mechanism of said sun visor, said mechanism being simple and easily accessible in whatever drive conditions.

[0012] A further object of the present invention is that of realising a helmet provided with a simple and economical positioning mechanism of the sun visor that does not affect, if not marginally, the production cost of the helmet itself.

[0013] The above and other objects of the invention are obtained by means of a protective helmet provided with a sun visor as claimed in the hereby attached claims.

[0014] The helmet according to the invention provides for the presence of an external transparent visor, that wholly occupies the observation aperture of said helmet, and of an internal sun visor that can be lowered to occupy the upper part of said observation aperture, or raised and retracted into an interspace provided between the helmet shell and the internal padding of the helmet itself.

[0015] The positioning mechanism of said sun visor comprises a lever attached with one of its ends to the side extension of the sun visor itself, and with the other end to an activation element arranged on the external surface of the helmet shell.

[0016] Advantageously, said activation element is arranged laterally with respect to the observation aperture of the helmet, in particular on the left side, so as to be easily accessible, preferably by using the left hand, whatever the position of the external transparent sun visor might be.

[0017] Said actuation element controls translatory movements of said lever that are transformed in a rotation of the sun visor from a retracted non-use position to an advanced use position and vice versa.

[0018] Advantageously, in a preferred embodiment of the helmet according to the invention, the shifting from the wholly retracted position to the wholly advanced position can occur gradually, instead of occurring in one single movement. In this way, it is possible to avoid a too sudden and swift variation of the brightness conditions of the user's field of view, thereby assuring conditions of utmost comfort whatever the drive conditions might be.

[0019] The invention will be now described in more detail with particular reference to the hereby attached drawings, provided as a non-limiting example, in which:

- Figure 1 represents a longitudinal section of the protective helmet according to a first embodiment of the invention;
- Figure 2 represents a partially sectioned view of the positioning device of the sun visor of the protective helmet of Figure 1;
- Figure 3 represents a longitudinal section of the protective helmet according to a second embodiment of the invention;
- Figure 4 represents a partially sectioned view of the

positioning device of the sun visor of the protective helmet of Figure 3.

[0020] With reference to Figures 1 and 2, it is shown the protective helmet according to a first embodiment of the invention, in which the shifting of the sun visor from the non-use position to the use position occurs with a rectilinear movement of the activation device.

[0021] The protective helmet 1 comprises a shell 7 in which a front observation aperture 3 is provided in correspondence with the position of the eyes of the user wearing said helmet 1. Said helmet 1 further comprises a transparent visor 5, preferably realised in a plastic material, that is laterally hinged on the shell 7 of the helmet 1 by means of pins. The visor 5 is of such a size that it can completely occupy said observation aperture 3. The helmet 1 further comprises a second sun visor 11, internal with respect to said transparent visor 5 and parallel to it, preferably realised in a coloured plastic material, said sun visor 11 being laterally hinged on the shell 7 of the helmet 1 by means of pins 9.

[0022] Said sun visor 11 can shift from a retracted position inside the helmet 1, in an interspace expressly obtained above the observation aperture 3 between the shell 7 and the internal padding of the helmet 1, to an advanced position in which it occupies at least the upper portion of said observation aperture 3.

[0023] In order to be able to raise and lower said sun visor 11 whatever the position of the most external sun visor 5 might be, it is provided a positioning mechanism of said sun visor 11. Said mechanism comprises a lever 13 arranged inside the shell 7 of the helmet 1 and an activation element 15 arranged on the external surface 7a of said shell 7. An aperture is provided in said shell 7 for allowing the connection between said lever 13 and said activation element 15.

[0024] It should be noted that said activation element 15 is arranged laterally to the observation aperture 3, in a position in which it is accessible whatever the position of the transparent external sun visor 5 might be.

[0025] Advantageously, said activation element 15 is arranged on the left of the helmet 1, so that the user can reach it effortlessly with his/her left hand without raising his/her right hand from the motorcycle accelerator.

[0026] In this first embodiment, said activation element 15 is constituted by a sliding cursor 17.

[0027] The foot 17a of said cursor 17 can slide inside a slit 19 obtained in the shell 7 of the helmet 1.

[0028] Said foot 17a of the cursor 17 penetrates through the slit 19 of the shell 7 and through a hole 21 obtained at one end of the lever 13. The foot 17a is attached to said lever 13 by means of a closing plug 23 that is inserted by pressure or threaded in a recess 25 expressly obtained in the foot 17a of the cursor 17.

[0029] In this way, the lever 13 is kept adherent to the internal surface 7b of the shell 7 of the helmet 1 and is made integral with the cursor 17, so that to a translatory movement of said cursor 17 inside the slit 19 corresponds a translatory movement of the lever 13 and, as a consequence, a rotation movement of the sun visor 11 about the pins 9.

[0030] As an alternative, it is possible to realise a cursor 17 with a threaded foot 17a and to use a nut for realising the coupling between said cursor 17 and the lever 13.

[0031] The opposite end of the lever 13 presents a projection 27 passing through a hole 29 obtained in an extension 11a of the sun visor 11 extending laterally to the observation aperture 3; said projection 27 of the lever 13 is blocked inside said hole 29 thanks to a rivet 31.

[0032] The relative position of the pin 9 and of the point in which the lever 13 is attached (that is of the hole 29) on the side extension 11 a of the sun visor 11 is such that to a translatory movement of said lever 13 corresponds a rotating movement of the sun visor 11 about the pins 9.

[0033] In this way, simply by moving the cursor 17 from one end to the other end of the slit 19, it is possible to shift the sun visor 11 from a retracted non-use position to an advanced use position and vice versa by means of the lever 13.

[0034] It should be noted that the lever 13 does not have a plane profile but presents a shaped profile so that it can adapt itself to the profile of the internal surface 7b of the shell 7 of the helmet 1, in particular to the step 33 provided around the observation aperture 3, and so that it can freely slide along said surface 7b between the positions corresponding to the two extreme positions of the cursor 17 inside the slit 19 without meeting any obstacle.

[0035] Figures 3 and 4 refer to a second embodiment of the protective helmet 1 according to the invention differing from the first above described embodiment in the fact that the shifting of the sun visor 11 from the retracted non-use position to the advanced use position and vice versa occurs by acting on a turning control.

[0036] In said second embodiment, the activation element 15 is constituted by a knob 35 arranged on the external surface 7a of the shell 7 of the helmet 1. Said knob 35 comprises a prominence penetrating through a hole 37 expressly obtained in the shell 7 of the helmet 1 and terminating with a gear wheel 35a.

[0037] Correspondingly, the lever 13 presents a slit 39 with a rack profile 41.

[0038] The gear wheel 35a meshes said rack profile 41 so that to a rotation of the knob 35 corresponds a translatory movement of the lever 13. Also in this case, said translatory movement of the lever 13 is transformed into a rotation movement of the sun visor 11 about the pins 9 between a retracted non-use position and an advanced use position.

[0039] The pitch of the rack profile 41 is small enough to allow a gradual and progressive movement of the lever 13 between the two positions corresponding to said two retracted and advanced positions of the sun visor 11.

[0040] Also in this embodiment, a closing plug 43 is blocked in a suitable recess 45 obtained in the gear wheel

35a for assuring the coupling between said gear wheel 35a and the lever 13.

[0041] It should be noted that in this second embodiment, in order to allow the movement of the rack 41 by means of the gear wheel 35a, the lever 13 must extend itself for a length beyond the point corresponding to the knob 35. For assuring that said lever 13 always remains adherent to the internal surface 7b of the shell 7, it is possible to provide a bracket 47, attached to said surface (for instance by means of gluing), through which the end of said lever 13 is made to pass.

[0042] Therefore the protective helmet according to the invention meets the predetermined objects of the invention, since it comprises a positioning device for the sun visor of simple manufacturing and use allowing the user to drive in conditions of utmost safety and comfort.

Claims

1. Protective helmet (1) comprising a shell (7), in which a front observation aperture (3) is provided a first mobile transparent visor (5) hinged to a first pair of pins, that can wholly occupy said observation aperture (3); and a second mobile sun visor (11) internal to said first mobile visor (5), that can be made to shift from a non-use position, retracted inside an interspace expressly obtained above said observation aperture (3) between the external shell (7) and the internal padding of said helmet (1), to a use position, advanced to occupy at least an upper portion of said observation aperture (3), and vice versa, said second mobile visor (11) being positionable by means of a positioning mechanism comprising an activation element (15), arranged on the external surface (7a) of said shell (7) of said helmet (1), and a lever (13) adherent to the internal surface (7b) of said shell (7) and attached with one of its ends to said activation element (15) and with its opposite end to an extension (11a) of said second visor (11) extending laterally to said observation aperture (3), an aperture (19, 37) being provided in said shell (7) for allowing the connection between said lever (13) and said activation element (15),
characterised in that

   - said first mobile visor (5) is external to said shell; and
   - said second mobile visor (11) is laterally hinged independently of said first mobile visor (5) by means of a second pair of pins (9) separate from said first pair of pins.

2. Protective helmet (1) according to claim 1, **characterised by** the fact that said activation element (15) controls translatory movements of said lever (13).

3. Protective helmet (1) according to claims 1 and 2, **characterised by** the fact that the position of the point in which said lever (13) is attached to said side extension (11a) of the sun visor (11) with respect to the position of the pins (9) of said visor (11) is determined so that a translatory movement of said lever (13) corresponds to a rotation movement of said visor (11) about said pins (9).

4. Protective helmet (1) according to claim 1, **characterised by** the fact that said lever (13) presents at one of its ends a projection (27) passing through a hole (29) obtained in said side extension (11a) of the sun visor (11) and attached to it by means of a blocking rivet (31).

5. Protective helmet (1) according to claim 1, **characterised by** the fact that said activation element (15) is constituted by a cursor (17) comprising a foot (17a) passing through a slit (19) obtained in the shell (7) of the helmet (1) and through a hole (21) obtained at one end of the lever (13) and attached to said lever (23) by means of a closing plug (23).

6. Protective helmet according to claim 1, **characterised by** the fact that said activation element (15) is constituted by a knob (35) comprising a prominence in the form of a gear wheel (35a) passing through a hole (37) obtained in the shell (7) of the helmet (1) and through a slit (39) obtained at one end of the lever (13) and attached to said lever (13) by means of a closing plug (47), said slit (39) presenting a rack profile (41) able to mesh with said gear wheel (35a).

7. Protective helmet (1) according to claim 6, **characterised by** the fact that the pitch of said rack profile (41) is small enough to allow a gradual and progressive movement of said lever (13) between the two extreme positions corresponding to said two positions of use and of non-use of said sun visor (11).

8. Protective helmet (1) according to claim 1, **characterised by** the fact that said lever (13) presents a shaped profile so that it can adapt itself to the profile of the internal surface (7b) of the shell (7) of the helmet (1) and so that it can freely slide along said surface (7b) between the positions corresponding to said two positions of use and of non-use of said sun visor (11).

9. Protective helmet (1) according to any of the preceding claims, **characterised by** the fact that said activation element (15) is positioned laterally with respect to said observation aperture (3).

10. Protective helmet (1) according to claim 9, **characterised by** the fact that said activation element (15) is positioned on the left side of said observation aperture (3).

Patentansprüche

1. Schutzhelm (1), der Folgendes umfasst: eine Schale (7), in der ein frontales Sichtfenster (3) vorgesehen ist; ein erstes bewegliches, transparentes und um ein erstes Bolzenpaar schwenkbares Visier (5), das das Sichtfenster (3) vollständig abdecken kann, sowie ein zweites bewegliches Sonnenvisier (11) innerhalb jenes ersten beweglichen Visiers (5), das von einer Außergebrauchsstellung, zurückgenommen in einen eigens oberhalb des Sichtfensters (3) geschaffenen Zwischenraum zwischen der äußeren Schale (7) und der inneren Auspolsterung des Helms (1) in eine vorverlegte Gebrauchslage verschoben und wieder zurückgestellt werden kann, die mindestens einen oberen Bereich des Sichtfensters (3) abdecken kann, und das zweite bewegliche Visier (11) durch eine Stellmechanik positioniert werden kann, die ein Betätigungselement (15) aufweist, das an der Außenfläche (7a) der Schale (7) des Helms (1) angeordnet ist, sowie einen mit der Innenfläche (7b) der Schale (7) verbundenen Hebel (13), der mit seinem einen Ende an jenes Betätigungselement (15) und mit seinem gegenüberliegenden Ende an eine Ausladung (11a) des zweiten Visiers (11) angelenkt ist, die sich seitlich des Sichtfensters (3) befindet, einer in der Schale (7) vorgesehenen Aussparung (19, 37), um die Verbindung zwischen dem Hebel (13) und dem Betätigungselement (15) zu ermöglichen,
dadurch gekennzeichnet, dass

   - das erste bewegliche Visier (5) außerhalb der Schale liegt; und
   - das zweite bewegliche Visier (11) seitlich drehbar unabhängig von dem ersten beweglichen Visier (5) mittels eines zweiten Bolzenpaars (9) gelagert ist.

2. Schutzhelm (1) nach Anspruch 1,
dadurch gekennzeichnet, dass das Betätigungselement (15) die Verschiebebewegungen des Hebels (13) steuert.

3. Schutzhelm (1) nach den Ansprüchen 1 und 2,
dadurch gekennzeichnet, dass die Lage des Punktes, in dem der Hebel (13) an die seitliche Ausladung (11a) der Sonnenblende (11) in Bezug auf die Position der Bolzen (9) des Visiers (11) angelenkt ist, so festgelegt ist, dass eine translatorische Bewegung des Hebels (13) einer Drehbewegung des Visiers (11) um die Bolzen (9) entspricht.

4. Schutzhelm (1) nach Anspruch 1,
dadurch gekennzeichnet, dass der Hebel (13) an seinem einen Ende eine Auskragung (27) aufweist, die ein in der seitlichen Ausladung (11a) der Sonnenblende (11) geschaffenes Loch (29) durchdringt und durch eine unlösbare Nietverbindung (31) an sie angelenkt ist.

5. Schutzhelm (1) nach Anspruch 1,
dadurch gekennzeichnet, dass das Betätigungselement (15) durch einen Schieber (17) gebildet wird, der einen Fuss (17a) umfasst, der in einem in der Schale (7) des Helms (1) geschaffenen Schlitz (19) läuft sowie durch ein Loch (21), das am einen Ende des Hebels (13) vorhanden ist, an den Hebel (13) mittels eines Verschlussstopfens (23) angefügt ist.

6. Schutzhelm nach Anspruch 1,
dadurch gekennzeichnet, dass das Betätigungselement (15) durch einen Knopf (35) gebildet wird, der einen Vorsprung in Form eines Zahnrades (35a) umfasst, das durch eine in der Schale (7) des Helms (1) geschaffene Aussparung (37) und einen an einem Ende des Hebels (13) geschaffenen Schlitz (39) ragt und mittels eines Verschlussstopfens (47) an den Hebel (13) angelenkt ist, wobei der Schlitz (39) ein Zahnstangenprofil (41) aufweist, das geeignet ist, mit dem Zahnrad (35a) zu kämmen.

7. Schutzhelm (1) nach Anspruch 6,
dadurch gekennzeichnet, dass die Zahnteilung des Zahnstangenprofils (41) klein genug ist, um eine feinfühlige und fortlaufende Bewegung des Hebels (13) zwischen den beiden extremen Positionen der Gebrauchs- und der Außergebrauchsstellung der Sonnenblende (11) zu erlauben.

8. Schutzhelm (1) nach Anspruch 1,
dadurch gekennzeichnet, dass der Hebel (13) ein Formprofil aufweist, so dass er sich dem Profil der Innenfläche (7b) der Schale (7) des Helms (1) anpassen kann, damit er entlang der Oberfläche (7b) zwischen den Positionen entsprechend der Gebrauchs- und der Außergebrauchsstellung der Sonnenblende (11) frei gleiten kann.

9. Schutzhelm (1) nach einem der vorhergehenden Ansprüche,
dadurch gekennzeichnet, dass das Betätigungselement (15) in Bezug auf das Sichtfenster (3) seitlich positioniert ist.

10. Schutzhelm (1) nach Anspruch 9,
dadurch gekennzeichnet, dass das Betätigungselement (15) auf der linken Seite des Sichtfensters (3) angeordnet ist.

Revendications

1. Casque protecteur (1) comprenant : une coque (7) dans laquelle est pratiquée une ouverture d'obser-

vation avant (3) ; une première visière mobile transparente (5), articulée sur une première paire de tourillons, qui peut totalement occuper ladite ouverture d'observation (3) ; et une deuxième visière pare-soleil mobile (11), interne par rapport à ladite première visière mobile (5), qui peut être déplacée d'une position de non-utilisation, rétractée à l'intérieur d'un espacement expressément formé au-dessus de ladite ouverture d'observation (3) entre la coque externe (7) et le capitonnage interne dudit casque (1), à une position d'utilisation, avancée pour occuper au moins une partie supérieure de ladite ouverture d'observation (3), et *vice versa,* ladite deuxième visière mobile (11) pouvant être positionnée au moyen d'un mécanisme de positionnement comprenant un élément d'activation (15), disposé sur la surface externe (7a) de ladite coque (7) dudit casque (1), et un levier (13) en contact avec la surface interne (7b) de ladite coque (7) et fixé, à l'une de ses extrémités, audit élément d'activation (15) et, à son extrémité opposée, à une extension (11a) de ladite deuxième visière (11) s'étendant latéralement par rapport à ladite ouverture d'observation (3), une ouverture (19, 37) étant pratiquée dans ladite coque (7) pour permettre le raccordement entre ledit levier (13) et ledit élément d'activation (15), **caractérisé en ce que** :

- ladite première visière mobile (5) est externe à ladite coque ; et
- ladite deuxième visière mobile (11) est articulée latéralement, indépendamment de ladite première visière mobile (5), au moyen d'une deuxième paire de tourillons (9) séparée de ladite première paire de tourillons.

2. Casque protecteur (1) selon la revendication 1, **caractérisé par le fait que** ledit élément d'activation (15) commande des mouvements de translation dudit levier (13).

3. Casque protecteur (1) selon les revendications 1 et 2, **caractérisé par le fait que** la position du point où ledit levier (13) est fixé à ladite extension latérale (11a) de la visière pare-soleil (11), par rapport à la position des tourillons (9) de ladite visière (11), est déterminée de sorte qu'un mouvement de translation dudit levier (13) corresponde à un mouvement de rotation de ladite visière (11) autour desdits tourillons (9).

4. Casque protecteur (1) selon la revendication 1, **caractérisé par le fait que** ledit levier (13) présente, à l'une de ses extrémités, une saillie (27) qui traverse un trou (29) formé dans ladite extension latérale (11a) de la visière pare-soleil (11) et qui est fixée à celui-ci au moyen d'un rivet de blocage (31).

5. Casque protecteur (1) selon la revendication 1, **caractérisé par le fait que** ledit élément d'activation (15) est constitué d'un curseur (17) comprenant un pied (17a) traversant une fente (19), formée dans la coque (7) du casque (1), et un trou (21), formé à une extrémité du levier (13), et fixé audit levier (13) au moyen d'un bouchon d'obturation (23).

6. Casque protecteur selon la revendication 1, **caractérisé par le fait que** ledit élément d'activation (15) est constitué d'une molette (35) comprenant une protubérance en forme de roue dentée (35a) traversant un trou (37), formé dans la coque (7) du casque (1), et une fente (39), formée à une extrémité du levier (13), et fixée audit levier (13) au moyen d'un bouchon d'obturation (47), ladite fente (39) présentant un profil à crémaillère (41) capable de s'engrener avec ladite roue dentée (35a).

7. Casque protecteur (1) selon la revendication 6, **caractérisé par le fait que** le pas dudit profil à crémaillère (41) est suffisamment petit pour permettre un mouvement graduel et progressif dudit levier (13) entre les deux positions extrêmes correspondant auxdites deux positions d'utilisation et de non-utilisation de ladite visière pare-soleil (11).

8. Casque protecteur (1) selon la revendication 1, **caractérisé par le fait que** ledit levier (13) présente un profil façonné tel qu'il peut s'adapter au profil de la surface interne (7b) de la coque (7) du casque (1) et tel qu'il peut librement coulisser le long de ladite surface (7b), entre les positions correspondant auxdites deux positions d'utilisation et de non-utilisation de ladite visière pare-soleil (11).

9. Casque protecteur (1) selon l'une quelconque des revendications précédentes, **caractérisé par le fait que** ledit élément d'activation (15) est positionné latéralement par rapport à ladite ouverture d'observation (3).

10. Casque protecteur (1) selon la revendication 9, **caractérisé par le fait que** ledit élément d'activation (15) est positionné du côté gauche de ladite ouverture d'observation (3).

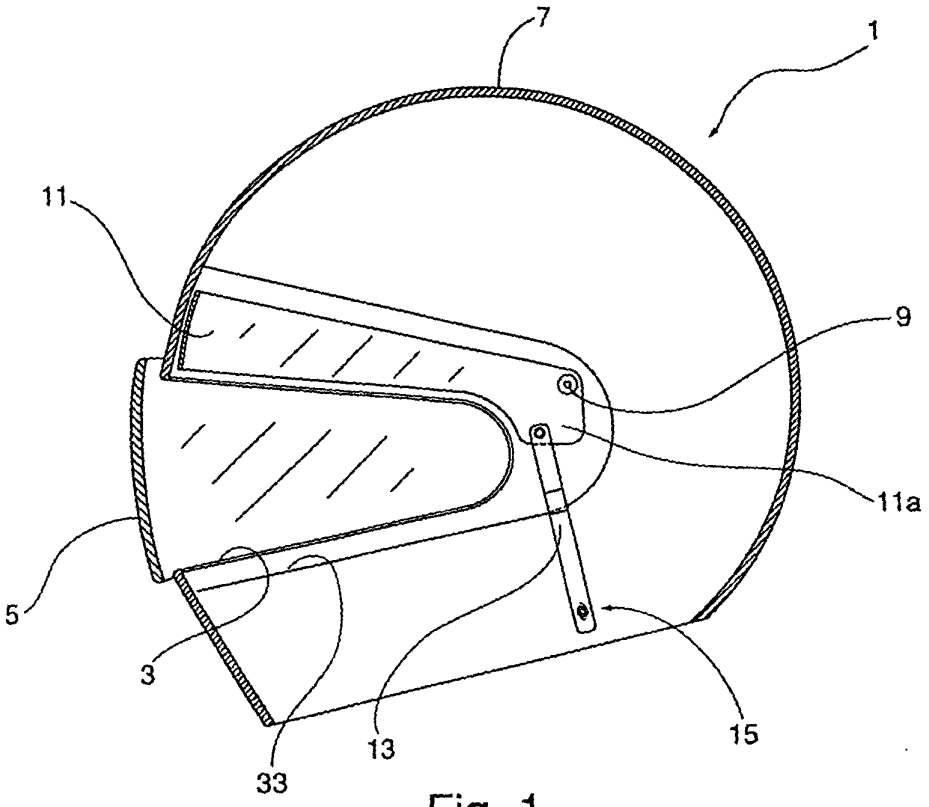

Fig. 1

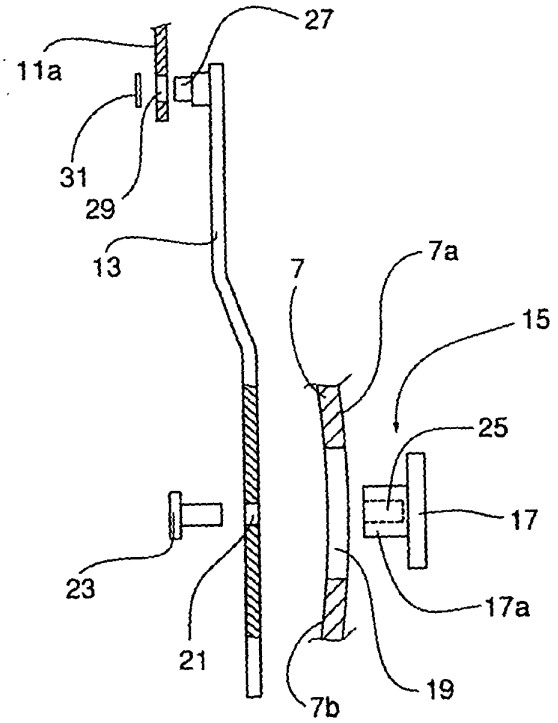

Fig. 2

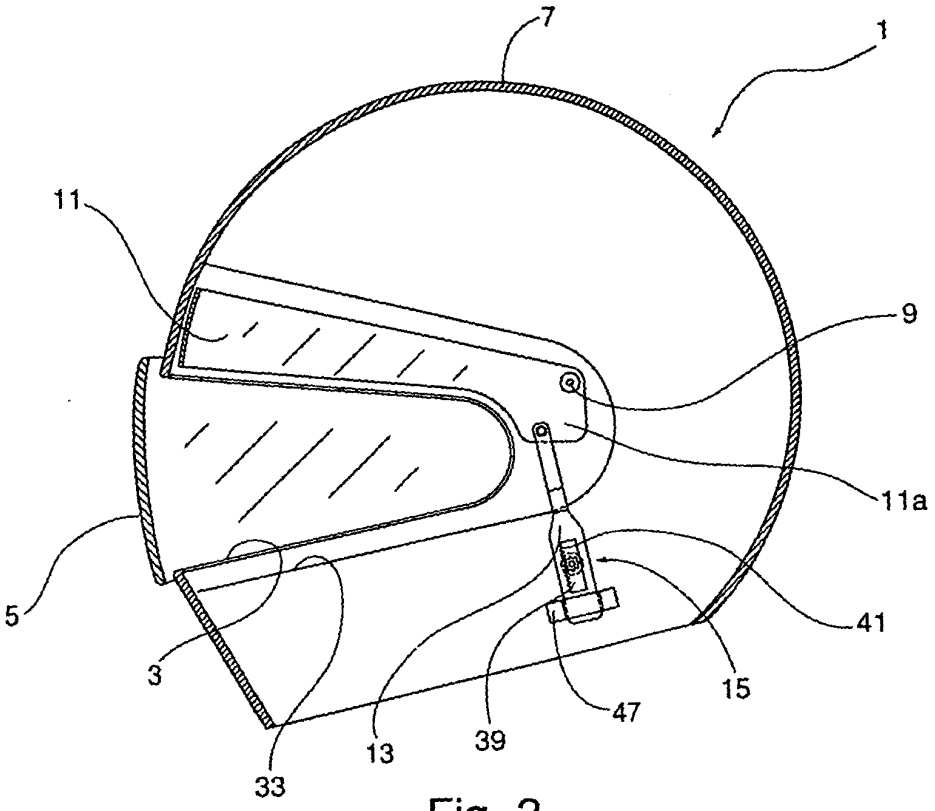
7
1
11
9
11a
5
41
3
15
47
39
13
33

Fig. 3

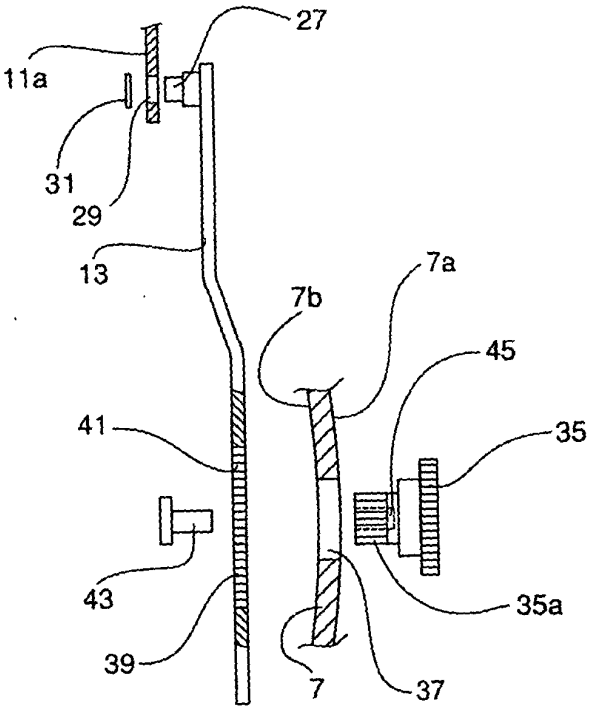
27
11a
31
29
13
7a
7b
45
41
35
43
35a
39
7
37

Fig. 4

REFERENCES CITED IN THE DESCRIPTION

This list of references cited by the applicant is for the reader's convenience only. It does not form part of the European patent document. Even though great care has been taken in compiling the references, errors or omissions cannot be excluded and the EPO disclaims all liability in this regard.

Patent documents cited in the description

- FR 2532528 A **[0007]**
- GB 2014432 A **[0007]**
- DE 4416921, Schuberth-Werk GmbH & Co KG **[0008]**