(19) Europäisches Patentamt
European Patent Office
Office européen des brevets

(11) EP 1 610 060 A3

(12) **EUROPEAN PATENT APPLICATION**

(88) Date of publication A3:
**18.07.2007 Bulletin 2007/29**

(43) Date of publication A2:
**28.12.2005 Bulletin 2005/52**

(21) Application number: **05105248.8**

(22) Date of filing: **15.06.2005**

(51) Int Cl.:
***F21V 21/14*** *(2006.01)* ***F21S 8/02*** *(2006.01)*

(84) Designated Contracting States:
**AT BE BG CH CY CZ DE DK EE ES FI FR GB GR HU IE IS IT LI LT LU MC NL PL PT RO SE SI SK TR**
Designated Extension States:
**AL BA HR LV MK YU**

(30) Priority: **22.06.2004 IT MI20040306 U**

(71) Applicant: **iGUZZINI ILLUMINAZIONE S.p.A.**
**62019 Recanati-Macerata (IT)**

(72) Inventor: **Guzzini, Giannunzio**
**62019 Recanati (Macerata) (IT)**

(74) Representative: **Coppo, Alessandro et al**
**Ing. Barzanò & Zanardo Milano S.p.A.,**
**Via Borgonuovo, 10**
**20121 Milano (IT)**

(54) **Retractable lighting device**

(57) A retractable lighting device comprising at least one arm (20) bearing at least one lamp holder (21) and at least one light bulb (22) and positioned above a structure to be illuminated (12, 13) wherein said arm (20) is linked to a mobile support element (17) by means of an alternative actuator (24, 31) that controls the movement between a rest position, wherein the complete lighting device is contained in a plane support (14) within said structure (12, 13) and a working position external to said structure (12, 13) when the light bulb is lit up. Therefore movement can be made on either a horizontal or vertical plane, as well as on the exterior of the structure or in an internal position covered of the said structure.

Fig.1

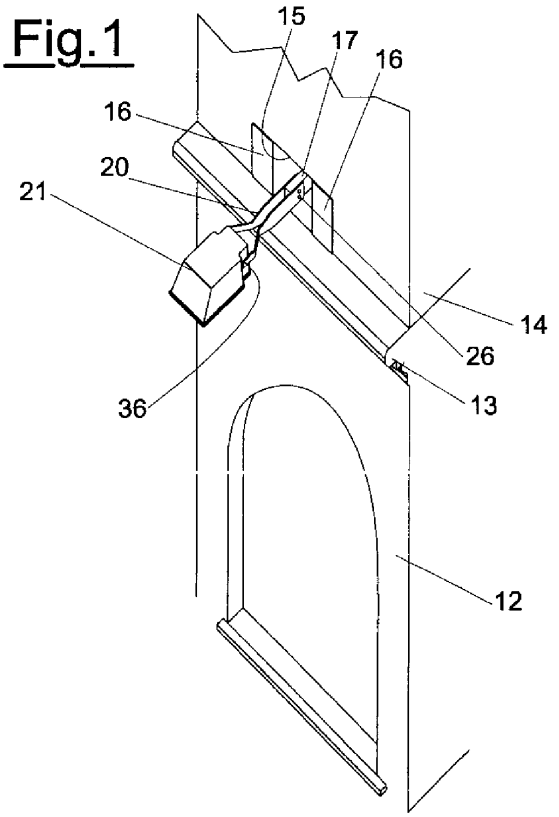


EP 1 610 060 A3

European Patent Office

# EUROPEAN SEARCH REPORT

Application Number
EP 05 10 5248

## DOCUMENTS CONSIDERED TO BE RELEVANT

| Category | Citation of document with indication, where appropriate, of relevant passages | Relevant to claim | CLASSIFICATION OF THE APPLICATION (IPC) |
|---|---|---|---|
| X | US 5 682 131 A (GOW THOMAS W [US])<br>28 October 1997 (1997-10-28)<br>* column 3, line 17 - line 61 *<br>* figures 1-3 *<br>----- | 1,7,8 | INV.<br>F21V21/14<br>F21S8/02 |
| X | FR 2 532 039 A (MERIDIONALE ELECT NOEL PELLEGR [FR])<br>24 February 1984 (1984-02-24)<br>* page 1, line 31 - page 2, line 31 *<br>* figure 1 *<br>----- | 1,7 | |
| X | US 2 919 098 A (MULL BRUCE D ET AL)<br>29 December 1959 (1959-12-29)<br>* column 2, line 15 - line 23 *<br>* column 3, line 16 - column 3, line 51 *<br>* figures 1,7 *<br>----- | 1 | |
| X | US 5 513 085 A (BOURNE STEVEN M [US])<br>30 April 1996 (1996-04-30)<br>* column 4, line 5 - line 12 *<br>* column 4, line 23 - line 50 *<br>* column 6, line 24 - line 31 *<br>* figures 1-3,12-22 *<br>----- | 1 | TECHNICAL FIELDS SEARCHED (IPC)<br>F21V |
| X | US 4 894 755 A (CHANDLER DANIEL E [US])<br>16 January 1990 (1990-01-16)<br>* column 3, line 47 - column 4, line 17 *<br>* column 4, line 58 - line 65 *<br>* column 5, line 36 - line 68 *<br>* figure 6 *<br>----- | 1 | |

The present search report has been drawn up for all claims

| Place of search | Date of completion of the search | Examiner |
|---|---|---|
| The Hague | 6 June 2007 | De Mas, Alfonso |

CATEGORY OF CITED DOCUMENTS

X : particularly relevant if taken alone
Y : particularly relevant if combined with another document of the same category
A : technological background
O : non-written disclosure
P : intermediate document

T : theory or principle underlying the invention
E : earlier patent document, but published on, or after the filing date
D : document cited in the application
L : document cited for other reasons
.....
& : member of the same patent family, corresponding document

3

EPO FORM 1503 03.82 (P04C01)

## ANNEX TO THE EUROPEAN SEARCH REPORT ON EUROPEAN PATENT APPLICATION NO. EP 05 10 5248

This annex lists the patent family members relating to the patent documents cited in the above-mentioned European search report.
The members are as contained in the European Patent Office EDP file on
The European Patent Office is in no way liable for these particulars which are merely given for the purpose of information.

06-06-2007

| Patent document cited in search report | Publication date | Patent family member(s) | Publication date |
|---|---|---|---|
| US 5682131 A | 28-10-1997 | CA 2178971 A1 | 05-10-1997 |
| FR 2532039 A | 24-02-1984 | NONE | |
| US 2919098 A | 29-12-1959 | NONE | |
| US 5513085 A | 30-04-1996 | NONE | |
| US 4894755 A | 16-01-1990 | NONE | |

EPO FORM P0459

For more details about this annex : see Official Journal of the European Patent Office, No. 12/82