(19) Europäisches Patentamt
European Patent Office
Office européen des brevets

(11) EP 2 020 383 A1

(12) **EUROPEAN PATENT APPLICATION**

(43) Date of publication:
04.02.2009 Bulletin 2009/06

(51) Int Cl.:
B65D 23/06 *(2006.01)* ***B65D 47/40*** *(2006.01)*

(21) Application number: **08156889.1**

(22) Date of filing: **26.05.2008**

(84) Designated Contracting States:
AT BE BG CH CY CZ DE DK EE ES FI FR GB GR HR HU IE IS IT LI LT LU LV MC MT NL NO PL PT RO SE SI SK TR
Designated Extension States:
AL BA MK RS

(30) Priority: **01.08.2007 IT MI20071588**

(71) Applicant: **Guala Closures S.p.A.**
Alessandria (IT)

(72) Inventor: **CAPRA, Davide**
I-15040, Lu Monferrato AL (IT)

(74) Representative: **Fiorani, Giuseppe et al**
Perani Mezzanotte & Partners
Piazza San Babila, 5
20122 Milano (IT)

(54) **Non-refillable oil pourer**

(57) The present invention relates to an oil pourer (3) which comprises a pourer body (4) that is provided with a lip (5) designed specifically for oil and is suitable for being inserted in the mouth (101) of the container (100), in which the pourer (3) comprises restraining means (6) that prevent its removal from the mouth (101) of the container (100). The pourer (3) further comprises a valve for preventing refilling.

EP 2 020 383 A1

Description

[0001] The present invention relates to a non-refillable oil pourer.

[0002] The quality of oil production has been improving continuously in recent years; at the same time consumers have progressively become better informed and now appreciate and recognize to a greater extent the value of good-quality oils.

[0003] A need has therefore arisen to protect the consumer from possible imitations and/or adulterations, that is, to develop devices which prevent unauthorized persons from refilling an oil bottle with unauthorized contents, that is, generally a product of lower quality than that originally contained in the bottle - sometimes with risks to the consumer's health.

[0004] In fact, oil bottles that are currently on the market have closures comprising a pourer made of polymeric material and a stopper made of polymeric material covered by a metal capsule.

[0005] The stopper has means which provide evidence of the initial opening of the bottle and the pourer is made of flexible polymeric material such as to perform an effective anti-drip action.

[0006] Pourers with valves for preventing refilling are not known; moreover, it would not be easy to fit them on known closures since, precisely because they comprise pourers that are necessarily made of soft polymeric materials owing to their surface properties, it would not be possible to ensure that the pourer would have sufficient resistance to removal.

[0007] In view of the above-described state of the art, the object of the present invention is to provide an oil pourer which has means that ensure its integrity.

[0008] Moreover, it would be desirable to provide an oil pourer which could be fitted on standard bottles (that is, those produced in accordance with the UNI 10666 standard) so as to be able to optimize large-scale production.

[0009] Finally, it would be desirable to provide a pourer which would retain the anti-drip properties of known pourers, that is, a pourer which would allow a small quantity of oil to be poured out even when the bottle was full, without the stream of oil soiling the bottle.

[0010] According to the present invention, this object is achieved by means of a pourer according to Claim 1. Further preferred embodiments are claimed in the dependent claims.

[0011] By virtue of the present invention, it is possible to produce a pourer which at least partially solves some of the problems of the pourers of the prior art.

[0012] The characteristics and advantages of the present invention will become clear from the following detailed description of a practical embodiment which is given by way of non-limiting example with reference to the appended drawing which shows a partial section through a pourer according to a preferred embodiment of the present invention.

[0013] Where reference is made to up/down directions in the course of the present description they should be understood as referring to the orientation of the drawing or of the normal position of the container with the mouth facing upwards, and not as limiting of the described embodiment.

[0014] The closure of the invention has been developed to be fitted on a standard bottle, that is, a bottle defined by the UNI 10666 standard. However, the closure described may, of course, also be used on different containers.

[0015] The closure 1 comprises an outer element 2 and a pourer 3 which can be fitted in the mouth 101 of an oil container 100.

[0016] The pourer 3 comprises a pourer body 4 provided with a lip 5 designed specifically for oil. According to the invention, the pourer 3 comprises restraining means 6 for preventing the pourer body 4 from being removed from the mouth 101 of the container 100 without damage.

[0017] The pourer body 4 is made of a flexible polymeric material, that is, a material which has a relatively low elastic modulus, such as, for example, that of the polyolefins.

[0018] In contrast with the pourer body 4, the restraining means 6 is made of rigid polymeric material, that is, material having a relatively high elastic modulus such as, for example, polycarbonates, polyethylene terephthalates, acetal resins, ABS, mixtures thereof and the like.

[0019] With reference to the drawing, the pourer body 4 comprises a sleeve 7 suitable for being fitted in the mouth 101 of the container 100; the sleeve 7 is advantageously connected to the lip 5 by means of an intermediate portion 8 which is preferably flared to allow the lip 5 to have an inside diameter substantially equal to that of the mouth 101 of the container 100.

[0020] The sleeve 7 has an outside diameter smaller than that of the mouth 101 of a standard bottle 100.

[0021] The pourer body 4 advantageously comprises a weakened annular portion 9; the weakened annular portion 9 is preferably situated between the sleeve 7 and the intermediate portion 8.

[0022] The pourer body 4 advantageously comprises at least one sealing tongue 10 which is arranged, for example, on the sleeve 7 so as to ensure fluid-tightness between the sleeve 7 and the container 100. There are preferably two sealing tongues 10, 11, spaced apart in the longitudinal direction.

[0023] The sealing tongues 10, 11 extend radially beyond the inside diameter of the mouth 101 of a standard bottle 100 so as to be deformed when the pourer 3 is inserted.

[0024] The tongues 10, 11 are shown in continuous outline in their deformed configuration and in broken outline in the rest configuration, that is, in the configuration which they adopt prior to insertion in the bottle 100.

[0025] In a preferred embodiment, the sealing tongues 10, 11 are of at least two different sizes, the larger tongue

10 being arranged closer to the mouth 101 of the container than the other tongue 11.

[0026] The tongue 10 is advantageously about 20% thicker and/or longer than the tongue 11.

[0027] As can be seen in the drawing, each of the tongues 10, 11 is inclined along a cone coaxial with the longitudinal axis X-X of the pourer 3 and having its vertex facing downwards; the angle of the cone to the vertical may be between 20° and 60°, with a preferred value of about 40° or about 45°.

[0028] Alternatively, the tongues 10, 11 may be arranged at about 90° to the longitudinal axis X-X.

[0029] As can be seen in the drawing, the tongue 10 terminates in a edge 12 that is arranged substantially at 90° to the upper and lower sides of the tongue 10, whereas the tongue 11 terminates in a edge 13 that is inclined at an acute angle to upper side of the tongue 11 and at an obtuse angle to the lower side of the tongue 11.

[0030] The pourer body 4 is held in position against attempted tampering by the restraining means 6. This comprises a substantially annular element 14 having a substantially L-shaped cross-section with an outer vertical portion 15 concentric with the mouth 101 of the container 100 and a horizontal portion 16 which is arranged radially with respect to the longitudinal axis X-X of the container 100.

[0031] The vertical portion 15 comprises a substantially annular rib 17 which projects towards the longitudinal axis of the element 14 so as to be able to snap-engage a corresponding seat 102 formed on the outside of the mouth 101 of the container 100.

[0032] The shape of the annular rib 17 will be such that it can be inserted in the seat 102 easily but cannot be removed therefrom.

[0033] The horizontal portion 16 extends radially over the upper surface 104 of the container 100 to have an inside diameter smaller than that of the mouth 101 of the container so as to have an inwardly projecting annular portion 15.

[0034] As can be seen in the drawing, the horizontal portion 16 is disposed slightly above a radial lip 18 which extends generally circumferentially and is formed in the vicinity of the upper end 19 of the sleeve 7, immediately below the weakened annular portion 9.

[0035] The lip 18, which has an outside diameter smaller than the inside diameter of the mouth 101 of the container 100 but larger than the inside diameter of the upper portion 16, has the function of supporting the element 14, by means of the annular portion 15, during the movement of the closure 1, preventing the element 14 from dropping due to gravity prior to the fitting of the closure 1 on the container 100.

[0036] The maximum diameter of the radial lip 18 is advantageously smaller than the inside diameter of the neck 105 of the container 100 in which the pourer 3 will be fitted.

[0037] The inner end 19 of the horizontal portion 16 has a conical surface 20 the vertex of which faces downwards and which can come into abutment with a corresponding conical surface 21 formed on the pourer body 4.

[0038] In particular, the inwardly-projecting construction of the L-shaped element 14 enables the pourer body 4 to be restrained on the container 100 purely by means of the horizontal portion 16.

[0039] As a result, the longitudinal dimension of the restraining means 6 beyond the upper surface 105 can be limited to merely the thickness of the horizontal portion 16. When the container 100 is full, the value of the minimum angle by which it is necessary to incline the container 100 to prevent the oil that is coming out of the container 100 from falling directly onto a part of the closure 1 or of the container 100 can thus be kept low.

[0040] This enables a small quantity of oil to be poured without problems even when the container 100 is particularly full.

[0041] The outer element 2 comprises a capsule 22, generally made of metal, for example drawn aluminium, in which an insert 23 is fitted; the insert 23 has the function of ensuring that the pourer 3 is liquid-tight.

[0042] The capsule 22 is divided into two portions 22a, 22b by a breakable line 22c, for example, by virtue of small bridges, so that the initial opening of the container releases the portion 22b from the portion 22a by breaking the breakable line 22c and providing evidence that initial opening has taken place.

[0043] The upper portion 22a is generally also provided with a thread which is copied from the thread 103 of the container 100 by rolling.

[0044] The insert 23 comprises a thrust portion 24 advantageously comprising a vertical annular wall 25 and a horizontal annular abutment portion 26.

[0045] Since the closure 1 is preassembled, fitted on the container 100 in an axial direction, and then subjected to one or more mechanical operations to create the breakable line 22c and the thread, the thrust portion 26 transmits the axial force (that is, the axial movement) that is applied to the closure 1 to the element 14, more precisely to the horizontal portion 16, so that the element 14 can be restrained on the container 100, that is, so that the annular rib 17 can move over the mouth 101 of the container and be housed in the seat 102.

[0046] A method for the production, assembly and fitting of the closure 1 on a container 100 will now be described briefly with reference to the preferred embodiment shown.

[0047] The pourer body 4, the annular element 14, and the insert 23 are produced, preferably by injection moulding.

[0048] The pourer body 4 is inserted in the annular element 14 so that the end of the horizontal portion 16 passes over the lip 18 (which is resiliently deformed by bending), forming the pourer 3.

[0049] The insert 23 is restrained, in known manner, relative to the outer aluminium capsule 22 which is produced by drawing and the pourer body 4 is restrained, in known manner, relative to the capsule 22.

[0050] The pourer body 4 is inserted axially into the capsule 22 and the insert 23.

[0051] Since, as is clear from the drawing, there is no dimensional limitation on the order of the above-described assembly operations, they may also be performed in a different order; for example, the positioning of the annular element 14 around the pourer body 4 may also take place as the last operation prior to the fitting of the closure 1 on the container 100.

[0052] If an unauthorized user should exert a pull in order to remove the pourer body 4 from the mouth 101 of the container 100, the force exerted might be sufficient to lift the sleeve 7. In this case, the upper tongue 10 would come into abutment with the lower surface 15 of the end 19 of the horizontal portion 16 of the element 14.

[0053] The pulling force exerted on the pourer body 4 would thus be transmitted via the element 14 and the rib 17 to the neck 101 of the container 100, preventing further upward movement of the sleeve 7.

[0054] The pourer 3 has dimensions such that, if the removal force is increased, the weakened portion 9 yields before the tongue 10 passes over the end 19.

[0055] The pourer 3 may advantageously comprise means 27 for preventing refilling such as, for example, a one-way valve, for example, housed inside the pourer body 4 and possibly comprising a ball 28 restrained longitudinally inside the sleeve 7 by suitable surfaces 29, 30.

[0056] In the course of this description, reference is made to annular elements; this does not mean that the entire cross-section is constant throughout 360°; it will suffice if the annular elements are able to fulfil the functions described. The constituent functional elements may therefore also be partially interrupted and/or distributed around the 360°, provided that, as a whole, the functions described are fulfilled.

[0057] Naturally, in order to satisfy contingent and specific requirements, a person skilled in the art will be able to apply to the above-described configurations many modifications and variations all of which, however, are included in the scope of protection of the invention as defined in the appended claims.

Claims

1. An oil pourer (3) suitable for being fitted on the mouth (101) of an oil container (100), the pourer (3) comprising a pourer body (4) provided with a lip (5) designed specifically for oil, and being suitable for being inserted in the mouth (101) of the container (100),
characterized in that
the pourer (3) comprises restraining means (6) for preventing the removal of the pourer body (3) from the mouth (101) of the container (100).

2. A pourer (3) according to the preceding claim in which the pourer body (3) comprises a weakened annular portion (9) arranged axially between the sleeve (7) and the intermediate portion (8).

3. A pourer (3) according to any one of the preceding claims in which the pourer body (3) comprises one or more sealing tongues (10, 11) which are arranged so as to ensure fluid-tightness with the inside of the neck (105) of the container (100).

4. A pourer (3) according to the preceding claim in which the sealing tongues (10, 11) are of at least two different sizes.

5. A pourer (3) according to any one of Claims 3 and 4 in which the larger tongue or tongues (10) is/are arranged closer to the mouth (101) of the container 100) than the smaller tongue or tongues (11).

6. A pourer (3) according to any one of the preceding claims in which the upper sealing tongue or tongues (10) terminate/s in a edge (12) that is arranged substantially at 90° to the upper and lower sides of the tongue/s (10).

7. A pourer (3) according to any one of the preceding claims in which the lower sealing tongue or tongues (11) terminate/s in a edge (13) that is inclined at an acute angle to the upper side of the tongue/s (11) and at an obtuse angle to the lower side of the tongue/s (11).

8. A pourer (3) according to any one of the preceding claims in which the restraining means (6) comprise a substantially annular element (14) having a substantially L-shaped cross-section with a vertical portion (15) such as to be arranged outside of and concentrically with respect to the mouth (101) of the container (100), and a horizontal portion (16) such as to be arranged radially with respect to the longitudinal axis (X-X) of the container (100).

9. A pourer (3) according to the preceding claim in which the vertical portion (15) comprises an annular rib (17) projecting towards the interior of the element (14).

10. A pourer (3) according to any one of Claims 8 and 9, in which the horizontal portion (16) extends radially so as to have an inside diameter smaller than the outside diameter of the radial tongues (10, 11).

11. A pourer (3) according to any one of Claims 8 to 10 in which the horizontal portion (16) has, in the region of its inner end (19), a conical surface (20) the taper of which faces downwards, and which is suitable for coming into abutment with a corresponding conical surface (21) formed on the pourer body (3).

12. A closure (1) comprising a pourer (3) according to

any one of the preceding claims.

13. A closure (1) according to the preceding claim, comprising a metal capsule (22) divided into two portions (22a, 22b) by a weakened line (22c), in which separation between the two portions (22a, 22b) provides proof that the initial opening of the closure (1) has taken place.

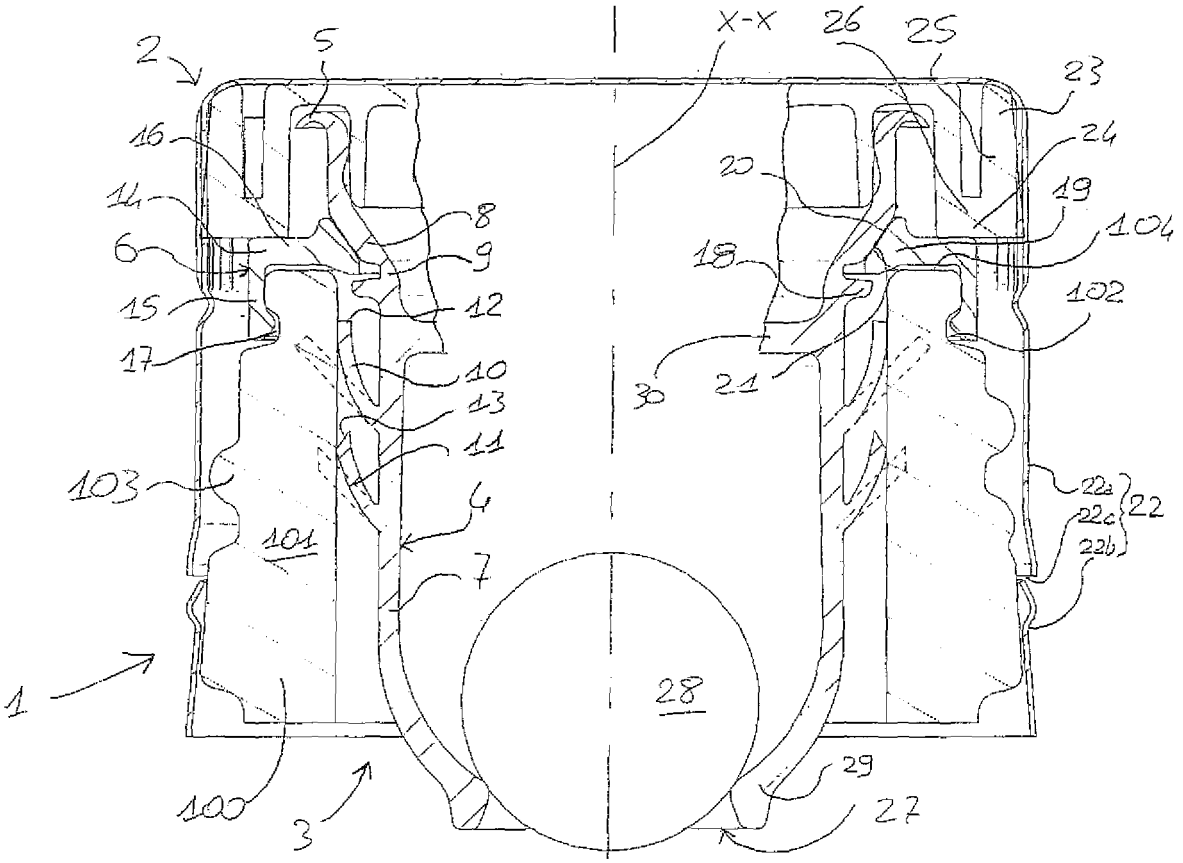
2
5
X-X
26
25
23
16
24
20
14
8
19
104
6
9
18
15
12
102
17
10
30
21
13
11
103
22a
22
22c
101
4
22b
7
1
28
29
100
3
27

Fig. 1

Europäisches Patentamt
European Patent Office
Office européen des brevets

EUROPEAN SEARCH REPORT

Application Number
EP 08 15 6889

DOCUMENTS CONSIDERED TO BE RELEVANT

Category	Citation of document with indication, where appropriate, of relevant passages	Relevant to claim	CLASSIFICATION OF THE APPLICATION (IPC)
X	US 2 763 402 A (GOULD LIVINGSTONE JAY) 18 September 1956 (1956-09-18) * column 2, line 21 - line 26; figures *	1,3,12	INV. B65D23/06 B65D47/40
Y		2-6,13	
A		8	
X	FR 1 493 125 A (MARCEL) 25 August 1967 (1967-08-25) * the whole document *	1,8,9,12	
Y	WO 01/32523 A (PECHINEY EMBALLAGE ALIMENTAIRE [FR]; GRANGER JACQUES [FR]; BOURREAU JE) 10 May 2001 (2001-05-10) * the whole document *	2-6,13	
A	WO 98/52838 A (MONTGOMERY DANIEL & SON LTD [GB]; THOMSON DAVID WILLIAM [GB]) 26 November 1998 (1998-11-26) * abstract; figures *	1-6,12	

TECHNICAL FIELDS SEARCHED (IPC)

B65D

The present search report has been drawn up for all claims

Place of search	Date of completion of the search	Examiner
The Hague	28 October 2008	Gino, Christophe

CATEGORY OF CITED DOCUMENTS

X : particularly relevant if taken alone
Y : particularly relevant if combined with another document of the same category
A : technological background
O : non-written disclosure
P : intermediate document

T : theory or principle underlying the invention
E : earlier patent document, but published on, or after the filing date
D : document cited in the application
L : document cited for other reasons
.....
& : member of the same patent family, corresponding document

1

EPO FORM 1503 03.82 (P04C01)

ANNEX TO THE EUROPEAN SEARCH REPORT ON EUROPEAN PATENT APPLICATION NO. EP 08 15 6889

This annex lists the patent family members relating to the patent documents cited in the above-mentioned European search report.
The members are as contained in the European Patent Office EDP file on
The European Patent Office is in no way liable for these particulars which are merely given for the purpose of information.

28-10-2008

Patent document cited in search report		Publication date	Patent family member(s)			Publication date
US 2763402	A	18-09-1956	NONE			
FR 1493125	A	25-08-1967	NONE			
WO 0132523	A	10-05-2001	AR	026289	A1	05-02-2003
			AT	263717	T	15-04-2004
			AU	1285601	A	14-05-2001
			BR	0015300	A	24-12-2002
			CA	2389350	A1	10-05-2001
			CZ	20021922	A3	17-03-2004
			DE	60009738	D1	13-05-2004
			DE	60009738	T2	28-04-2005
			EP	1226076	A1	31-07-2002
			ES	2219413	T3	01-12-2004
			FR	2800357	A1	04-05-2001
			HR	20020383	A2	30-04-2004
			HU	0203218	A2	28-02-2003
			MX	PA02004403	A	23-10-2002
			PL	354710	A1	09-02-2004
			PT	1226076	T	30-09-2004
			SK	6212002	A3	08-10-2002
			US	6845887	B1	25-01-2005
WO 9852838	A	26-11-1998	AU	7345598	A	11-12-1998

EPO FORM P0459

For more details about this annex : see Official Journal of the European Patent Office, No. 12/82