(19) Europäisches Patentamt
European Patent Office
Office européen des brevets

(11) EP 1 674 278 B1

(12) **EUROPEAN PATENT SPECIFICATION**

(45) Date of publication and mention of the grant of the patent:
15.07.2009 Bulletin 2009/29

(51) Int Cl.:
B41J 19/20 *(2006.01)*

(21) Application number: **05112125.9**

(22) Date of filing: **14.12.2005**

(54) **Printer with reciprocating printhead carriage**

Drucker mit hin- und herbewegbarem Druckwagen

Imprimante avec un chariot oscillante pour une tête d'impression

(84) Designated Contracting States:
AT BE BG CH CY CZ DE DK EE ES FI FR GB GR HU IE IS IT LI LT LU LV MC NL PL PT RO SE SI SK TR

(30) Priority: **22.12.2004 EP 04106831**

(43) Date of publication of application:
28.06.2006 Bulletin 2006/26

(73) Proprietor: **Océ-Technologies B.V.**
5914 CC Venlo (NL)

(72) Inventors:
- **Nottelman, Frank J.H.**
  5951 AW, Belfeld (NL)
- **Goeree, Barry B.**
  5914 WD, Venlo (NL)
- **Zwiers, Henk-Jan**
  5911 CP, Venlo (NL)
- **Van Dorp, Bas W.J.J.A.**
  5615 AD, Eindhoven (NL)
- **Dircks, Luc G.T.**
  5809 BW Leunen (NL)

(74) Representative: **Vanoppen, Ronny R.J.**
Océ-Technologies B.V.
Corporate Patents
Postbus 101
5900 MA Venlo (NL)

(56) References cited:
EP-A- 0 810 546
EP-A- 1 077 139
EP-A- 1 393 921
US-A- 6 010 206
US-B1- 6 264 303

- **PATENT ABSTRACTS OF JAPAN vol. 1998, no. 14, 31 December 1998 (1998-12-31) & JP 10 253318 A (BROTHER IND LTD), 25 September 1998 (1998-09-25)**

Note: Within nine months of the publication of the mention of the grant of the European patent in the European Patent Bulletin, any person may give notice to the European Patent Office of opposition to that patent, in accordance with the Implementing Regulations. Notice of opposition shall not be deemed to have been filed until the opposition fee has been paid. (Art. 99(1) European Patent Convention).

EP 1 674 278 B1

Printed by Jouve, 75001 PARIS (FR)

Description

[0001] The Invention relates to a printer comprising: a frame, a bearing assembly mounted to said frame, a platen rotatably supported in the bearing assembly for advancing a sheet of a recording medium, a guide rail mounted to the frame and extending in parallel with an axial direction of the platen, a ruler extending in parallel with the guide rail, a carriage driven to reciprocate along the guide rail and carrying a printhead, and a detector arranged to detect the position of the carriage relative to the ruler.

[0002] A typical example of a printer of this type, as disclosed for example in EP-A-1 393 921, is an ink Jet printer having a printhead or printheads adapted to expel droplets of liquid ink onto the recording medium that is advanced over the platen. The timings at which the nozzles of the printhead are energised must be accurately synchronised with the movement of the carriage. To this end, the carriage is equipped with the detector for reading markings on the ruler. In order to achieve a high print quality, it is prerequisite that the position of the ruler relative to the recording medium in the direction of the reciprocating movement of the carriage is stable over the whole print process.

[0003] In a conventional printer, the ruler is fixed at the guide rail, and the frame has a very stiff construction so that it will not be distorted by forces of inertia that are created by the acceleration and deceleration of the carriage.

[0004] It is an object of the invention to provide a printer which has a simple construction and nevertheless permits a high print quality, especially in highspeed printing.

[0005] According to the invention, this object is achieved by a printer of the type indicated above, wherein, in said axial direction, the ruler is rigidly fixed at a location of the bearing assembly independently of the guide rail.

[0006] Thus, the position of the ruler is directly coupled to the position of the bearing assembly which itself defines the axial position of the platen and hence the position of the sheet of the recording medium. When the frame becomes distorted, this will induce a lateral displacement of both, the platen and the guide rail, but the displacement of the guide rail will be different from that of the platen. However, since the ruler is not coupled to the guide rail but to the bearing assembly for the platen, the lateral displacement of the ruler will be the same as that of the platen, so that a stable relation between the position of the ruler and the recording medium is assured. As a result, the stiffness requirements for the frame may be less strict, which leads to a cost and weight reduction, and/or the print quality is improved or, for a given print quality, the carriage may be accelerated and decelerated more rapidly, so that a higher throughput can be achieved.

[0007] Preferred embodiments of the invention are indicated in the dependent claims.

[0008] The bearing assembly typically is formed by two bearings that are fixed at respective frame members at opposite ends of the platen. In one embodiment, both ends of the ruler are rigidly held at a respective one of the two bearings. In another embodiment, only one end of the ruler is held at one of the bearings, and the other end of the ruler is elastically connected to the frame, so that the ruler is tensioned between the two frame members. Then, the elastic suspension of the ruler permits the ruler to follow the lateral displacements of the one bearing to which it is connected.

[0009] The rigid connection between the end of the ruler and the bearing may preferably be achieved by means of a holding plate that is oriented in parallel with the axial direction of the platen, so that it has a high stiffness in this axial direction. The holding plate may be mounted to a bracket that is itself attached to the bearing or to a frame member directly at the mounting position of the bearing.

[0010] If the platen and the ruler are arranged on opposite sides of the guide rail, the mounting plate may form an extended arm which passes through a slot formed in the guide rail. Preferred embodiments of the invention will now be described in conjunction with the drawings, in which:

Fig. 1 is a front view of a printer according to the invention;

Fig. 2 is an enlarged cross-section along the line II-II in Fig. 1.

Fig. 3 is a schematic front view of a printer according to a modified embodiment;

Fig. 4 is a schematic front view analogous to Fig. 3, illustrating a distorted condition of a frame; and

Fig. 5 is a schematic view analogous to Fig. 4, for a printer according to a comparison example.

[0011] The printer shown in figure 1 comprises a frame 10 which is composed of a lower frame 12 formed by two uprights 14 and two cross-bars 16, and an upper frame that is formed by two plate-like frame members 18 projecting upwardly from the cross-bars 16.

[0012] A bearing assembly is formed by two bearings 20 which rotatably support a platen 22 between the two frame members 18.

[0013] A sheet support plate 24 is horizontally supported on the two frame members 18 and serves to support a sheet of a recording medium (not shown in Fig. 1) which is advanced in X-direction (normal to the plane of the drawing in Fig. 1) by means of the platen 22. A worm-type drive mechanism 26 for the platen 22 is arranged near one of the bearings 20 (on the left side in Fig. 1).

[0014] A guide rail 28 rests on the top ends of the frame members 18 and extends in parallel with the axial direction Y of the platen 22. A carriage 30 is guided on the guide rail 28 and is driven to move back and forth along the guide rail by means of a belt drive mechanism 32. The carriage 30 has a portion extending over the sheet

support plate 24, and a printhead 34 is mounted on the bottom side of this carriage portion so as to face the sheet that is advanced over the sheet support plate 24. The printhead 34 may for example be a hot melt ink jet printhead.

[0015] A ruler 36 extends above and in parallel with the guide rail 28 and has markings that can be read by a detector 38 mounted on the carriage 30. On the basis of the markings read by the detector 38, an electronic control system of the printer determines the timings at which the print units or nozzles of the printhead 34 are energised while the carriage 30 moves across the recording medium.

[0016] As can best be seen on the right side in Fig. 1, a bracket 40 is rigidly mounted on each of the bearings 20, more precisely, on the stationary part of the bearing, and a holding plate 42 oriented in the Y-Z-plane is ridigly secured to the bracket 40. Each holding plate 42 forms an arm 44 which extends obliquely upwardly and outwardly through a slot formed in the guide rail 28. The ruler 36 is, with its opposite ends, rigidly held between the top ends of the arms 44.

[0017] On the left side in Fig. 1, the bracket 40 also accommodates the drive mechanism 26, and the holding plate 42 straddles a worm gear 46 of the drive mechanism.

[0018] As is shown in Fig. 2, the guide rail 28 is formed by a profile member which supports two cylindrical rods 48 on which the carriage 30 is supported and guided with roller bearings. The slot for the arm 44 is indicated as 50. The inclined position of the arms 44, as shown in Fig. 1, has the advantage that the ruler 36 can be held under a certain tension and at the same time permits the carriage 30 to travel over the full width of the sheet support plate.

[0019] The main advantage of the mounting structure for the ruler 36 as described above will now be explained in conjunction with Figs. 3 and 4 which, however, show a slightly modified embodiment example.

[0020] As is symbolically shown in Fig. 3, only one end (left) of the ruler 36 is directly connected to one of the bearings 20 by means of the arm 44, whereas the other end of the ruler is elastically connected to a frame member 52 which projects from the guide rail 28. The elastic suspension of that end of the ruler 36 is symbolised by a spring 54.

[0021] The spring 54 will hold the ruler 36 under a certain tension, but nevertheless, as in the first embodiment, the position of the ruler in Y-direction will be determined by the position of the bearing 20 and will thus be locked to the Y-position of the platen 22 and the sheet 56 advanced thereby.

[0022] When the carriage 30 moves back and forth along the guide rail 28, the drive mechanism for the carriage (not shown in Fig. 3) and the guide rail 28 will be subject to considerable forces of inertia, especially when large format prints, such as A0, shall be made with a high throughput, so that the acceleration and deceleration rates of the carriage are high. These forces tend to distort the frame 10, as has exaggeratedly been shown in Fig. 4. As a result of this distortion, the guide rail 28 is offset in Y-direction relative to the sheet 56 on the platen 22. However, since the ruler 36 is rigidly held by the arm 44, the markings on the ruler 36 will exactly be kept in registry with the sheet 56 on the platen 52. As a result, the distortion of the frame 10 will have no influence on the print position on the sheet 56, as is indicated by arrows in Figs. 3 and 4. The relative movement between the ruler 36 and the guide rail 28 is absorbed by the spring 54 in this embodiment.

[0023] For comparison, Fig. 5 illustrates the conventional case that the ruler 36 is rigidly supported at the guide rail 28. Then, the distortion of the frame 10 would lead to a displacement of the ruler markings and hence of the actual print position Pa in Y-direction relative to the intended target print position Pt, and the print quality would be deteriorated. The present invention successfully solves this problem.

Claims

1. A printer comprising:

- a frame (10),
- a bearing assembly (20) mounted to said frame,
- a platen (22) rotatably supported in the bearing assembly (20) for advancing a sheet (56) of a recording medium,
- a guide rail (28) mounted to the frame (10) and extending in parallel with an axial direction (Y) of the platen (22),
- a ruler (36) extending in parallel with the guide rail (28) and being fixed, rigidly in said axial direction (Y), at a location of the bearing assembly (20),
- a carriage (30) driven to reciprocate along the guide rail (28) and carrying a printhead (34), and
- a detector (38) arranged to detect the position of the carriage relative to the ruler,

characterized in that, in said axial direction (Y), the ruler (36) is rigidly fixed at said location of the bearing assembly (20) independently of the guide rail (28).

2. The printer according to claim 1, wherein the bearing assembly comprises two bearings (20), one at each end of the platen (22), and both ends of the ruler (36) are rigidly connected to a respective one of these bearings (20).

3. The printer according to claim 1, wherein one point on the ruler (36) is rigidly connected to a single bearing (20) of the platen (22), and at least one other point on the ruler (36) is elastically connected to a part (52) of the frame or the guide rail (28).

4. The printer according to any of the preceding claims, comprising a holding plate (42) oriented in a plane (Y-Z) in parallel with the axial direction (Y) of the platen (22) and connecting an end portion of the ruler (36) to the bearing (20) for the platen (22).

5. The printer according to claim 4, wherein the holding plate (42) forms an arm (44) which extends obliquely outwardly from the bearing (20) to the end portion of the ruler (36).

6. The printer according to claim 4 or 5, wherein the ruler (36) and the platen (22) are arranged on opposite sides of the guide rail (28) and the holding plate (42) forms an arm (44) which passes through a slot (50) formed in the guide rail (28).

7. The printer according to any of the claims 4 to 6, wherein the holding plate (42) is fixed to a bracket (40) that is fixed on the bearing (20) and/or at a frame part (18) directly at the mounting position of the bearing (20).

8. The printer according to any of the preceding claims, wherein the printer is an ink Jet printer.

Patentansprüche

1. Drucker mit:

- einem Gestell (10),
- einer an dem Gestell montierten Lageranordnung (20),
- einer Walze (22), die drehbar in der Lageranordnung (20) gehalten ist, um einen Bogen (56) eines Aufzeichnungsmediums zu transportieren,
- einer an dem Gestell (10) montierten Führungsschiene, die parallel zu einer axialen Richtung (Y) der Walze (22) verläuft,
- einem parallel zu der Führungsschiene (28) verlaufenden Lineal (36), das in der axialen Richtung (Y) starr an einem Punkt der Lageranordnung (20) befestigt ist,
- einem Wagen (30), der zu einer hin- und hergehenden Bewegung entlang der Führungsschiene (28) angetrieben ist und einen Druckkopf (34) trägt, und
- einem Detektor (38), der dazu ausgebildet ist, die Position des Wagens relativ zu dem Lineal zu detektieren,

dadurch gekennzeichnet, daß das Lineal (36) in der genannten axialen Richtung (Y) unabhängig von der Führungsschiene (28) starr an dem genannten Punkt der Lageranordnung (20) befestigt ist.

2. Drucker nach Anspruch 1, bei dem die Lageranordnung zwei Lager (20) aufweist, eines an jedem Ende der Walze (22), und beide Enden des Lineals (36) starr mit je einem dieser Lager verbunden ist.

3. Drucker nach Anspruch 1, bei dem ein Punkt an dem Lineal (36) starr mit einem einzelnen Lager (20) der Walze (22) verbunden ist und wenigstens ein anderer Punkt an dem Lineal (36) elastisch mit einem Teil (52) des Gestells oder der Führungsschiene (28) verbunden ist.

4. Drucker nach einem der vorstehenden Ansprüche, mit einer Halteplatte (42), die in einer Ebene (Y-Z) parallel zu der axialen Richtung (Y) der Walze orientiert ist und einen Endbereich des Lineals (36) mit dem Lager (20) für die Walze (22) verbindet.

5. Drucker nach Anspruch 4, bei dem die Halteplatte (42) einen Arm (44) bildet, der sich von dem Lager (20) aus schräg auswärts zu dem Endbereich des Lineals (36) erstreckt.

6. Drucker nach Anspruch 4 oder 5, bei dem das Lineal (36) und die Walze (22) auf entgegengesetzten Seiten der Führungsschiene (28) angeordnet sind und die Halteplatte (42) einen Arm (44) bildet, der durch einen in der Führungsschiene (28) gebildeten Schlitz (50) hindurchgeht.

7. Drucker nach einem der Ansprüche 4 bis 6, bei dem die Halteplatte (42) an einer Konsole (40) befestigt ist, die an dem Lager (20) und/oder einem Teil (18) des Gestells direkt an der Montageposition des Lagers (20) befestigt ist.

8. Drucker nach einem der vorstehenden Ansprüche, welcher Drucker ein Tintenstrahldrucker ist.

Revendications

1. Imprimante comprenant :

- un cadre (10),
- un ensemble palier (20) fixé sur ledit cadre,
- un plateau (22) supporté en rotation dans l'ensemble palier (20) destiné à faire avancer une feuille (56) d'un support d'enregistrement,
- un rail de guidage (28) fixé sur le cadre (10) et s'étendant parallèlement à une direction axiale (Y) du plateau (22),
- une règle (36) s'étendant parallèlement au rail de guidage (28), ladite règle étant fixée, de façon rigide dans ladite direction axiale (Y), à un emplacement de l'ensemble palier (20),
- un chariot (30) entraîné pour effectuer un mouvement de va-et-vient le long du rail de guidage

(28) et portant une tête d'impression (34), et
- un détecteur (38) configuré pour détecter la position du chariot par rapport à la règle,

caractérisé en ce que, dans ladite direction axiale (Y), la règle (36) est fixée de façon rigide à ledit emplacement de l'ensemble palier (20), indépendamment du rail de guidage (28).

2. Imprimante selon la revendication 1, dans laquelle l'ensemble palier comprend deux paliers (20), un palier situé à chaque extrémité du plateau (22) et les deux extrémités de la règle (36) étant reliées de façon rigide à un palier respectif sélectionné parmi ces paliers (20).

3. Imprimante selon la revendication 1, dans laquelle un point sur la règle (36) est relié de façon rigide à un palier unique (20) du plateau (22), et au moins un autre point sur la règle (36) est relié de manière élastique à une partie (52) du cadre ou du rail de guidage (28).

4. Imprimante selon l'une quelconque des revendications précédentes comprenant une plaque de maintien (42) orientée dans un plan (Y-Z) parallèle à la direction axiale (Y) du plateau (22) et reliant une partie terminale de la règle (36) au palier (20) pour le plateau (22).

5. Imprimante selon la revendication 4, dans laquelle la plaque de maintien (42) forme un bras (44) qui part en oblique vers l'extérieur du palier (20) jusqu'à la partie terminale de la règle (36).

6. Imprimante selon la revendication 4 ou la revendication 5, dans laquelle la règle (36) et le plateau (22) sont disposés sur les côtés opposés du rail de guidage (28) et la plaque de maintien (42) forme un bras (44) qui traverse une fente (50) formée dans le rail de guidage (28).

7. Imprimante selon l'une quelconque des revendications 4 à 6, dans laquelle la plaque de maintien (42) est fixée à un support (40) fixé sur le palier (20) et/ou au niveau d'une partie de cadre (18), directement sur la position de montage du palier (20).

8. Imprimante selon l'une quelconque des revendications précédentes, dans laquelle l'imprimante est une imprimante à jet d'encre.

Fig. 1

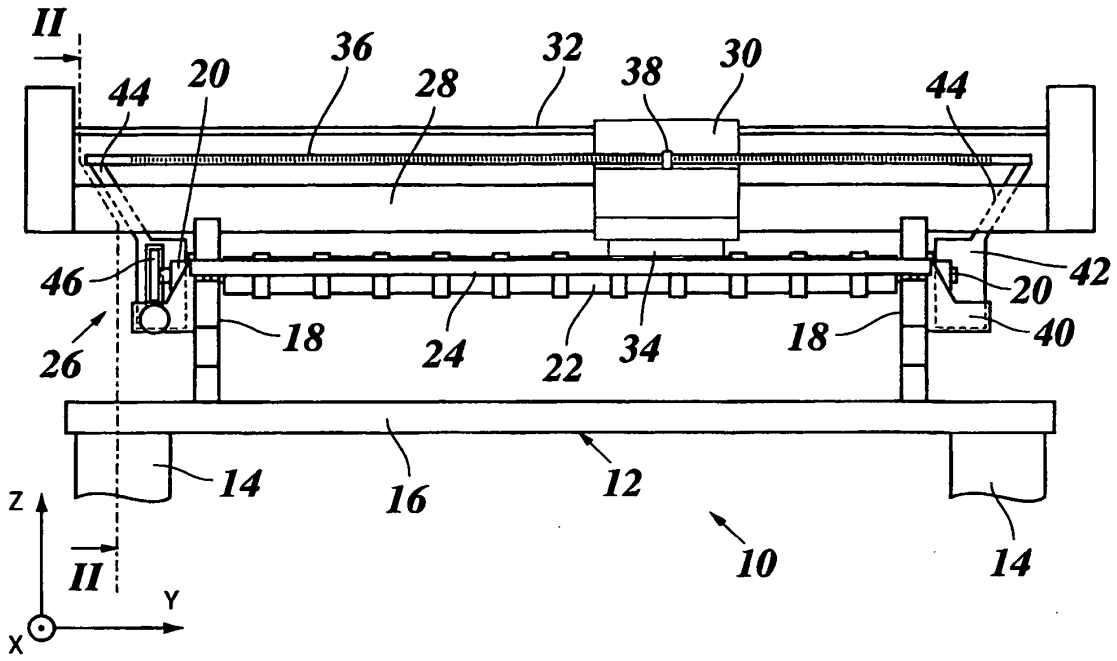
II
44
20
36
28
32
38
30
44
46
26
18
24
22
34
18
20
42
40
14
16
12
10
14
Z
II
Y
X

Fig. 2

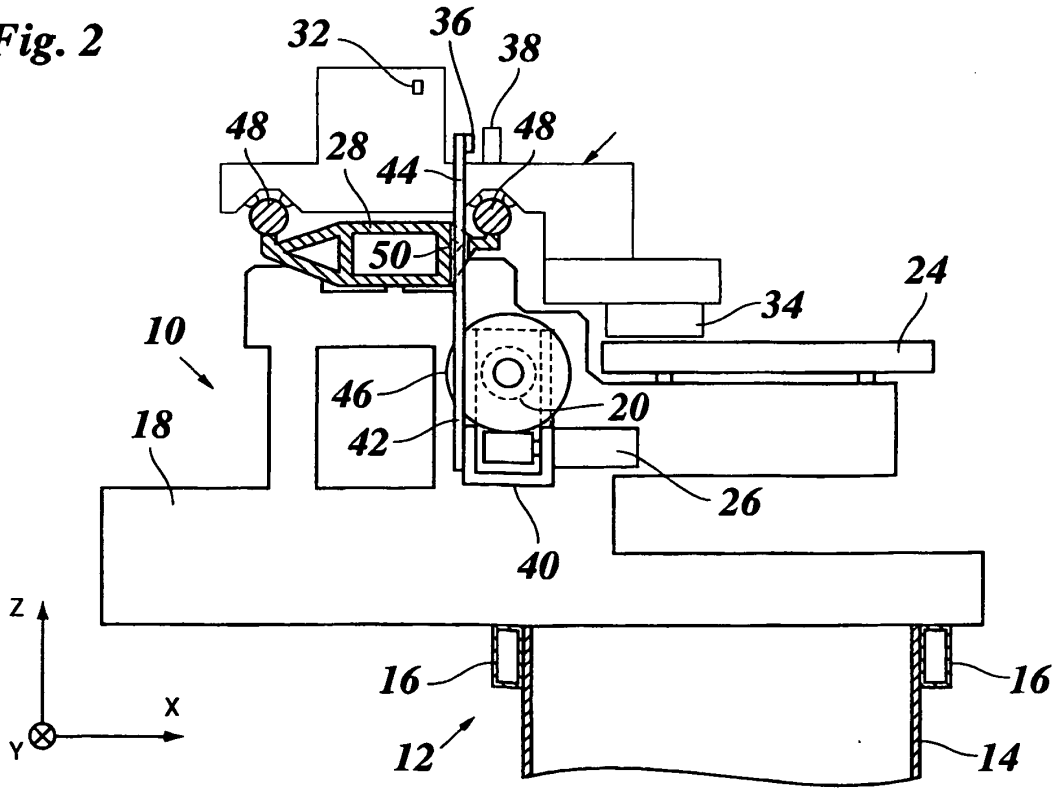
32
36
38
48
28
44
48
50
24
34
10
46
20
18
42
26
40
Z
16
16
X
Y
12
14

Fig. 3

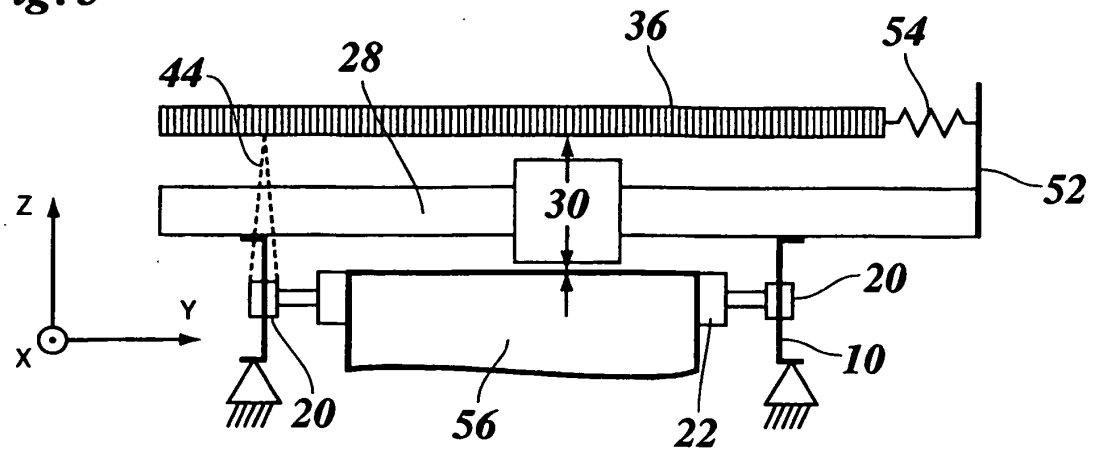

Fig. 4

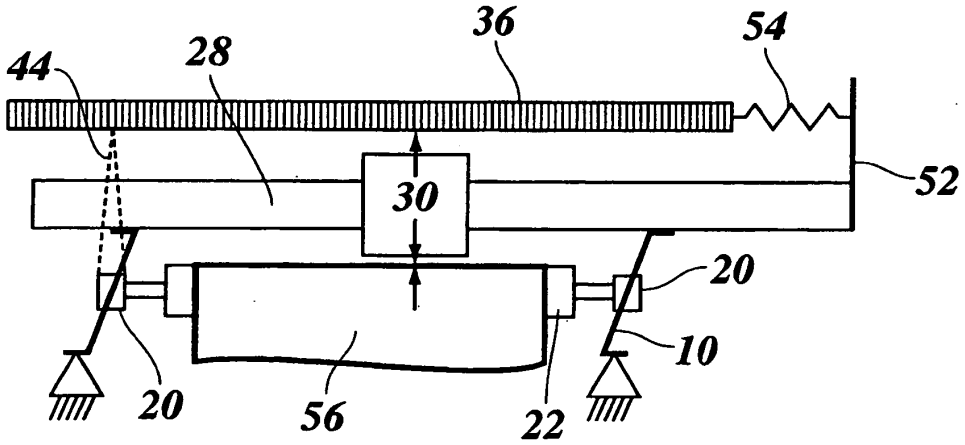

Fig. 5

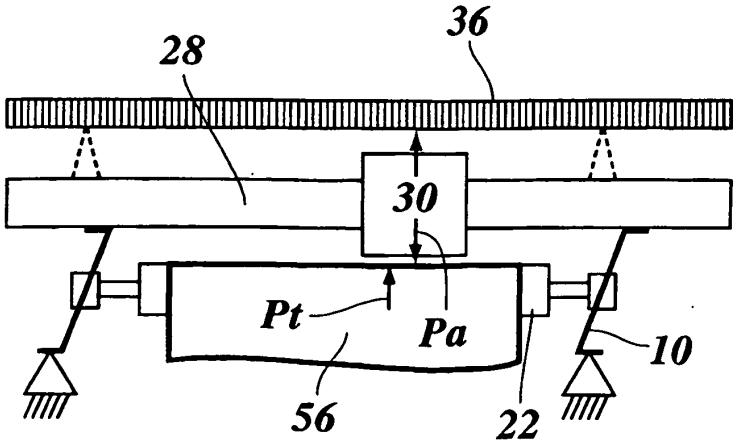

REFERENCES CITED IN THE DESCRIPTION

This list of references cited by the applicant is for the reader's convenience only. It does not form part of the European patent document. Even though great care has been taken in compiling the references, errors or omissions cannot be excluded and the EPO disclaims all liability in this regard.

Patent documents cited in the description

- EP 1393921 A **[0002]**