(19) Europäisches Patentamt
European Patent Office
Office européen des brevets

(11) EP 2 083 426 A1

(12) EUROPEAN PATENT APPLICATION

(43) Date of publication:
29.07.2009 Bulletin 2009/31

(51) Int Cl.:
H01B 17/30 *(2006.01)*

(21) Application number: **08100970.6**

(22) Date of filing: **28.01.2008**

(84) Designated Contracting States:
AT BE BG CH CY CZ DE DK EE ES FI FR GB GR HR HU IE IS IT LI LT LU LV MC MT NL NO PL PT RO SE SI SK TR
Designated Extension States:
AL BA MK RS

(71) Applicant: **ABB Research Ltd.**
8050 Zürich (CH)

(72) Inventors:
- **Roseen, Patrik**
  724 63, Västerås (SE)
- **Maxwell, Andrew**
  722 46, Västerås (SE)

(74) Representative: **Dahlstrand, Björn**
ABB AB
Intellectual Property
Ingenjör Bååths Gata 11
721 83 Västerås (SE)

(54) **A bushing, an electric power distribution installation provided therewith, and a method of producing such a bushing**

(57) A bushing (1) comprising an electrically insulating body (7) provided with a through hole and formed by an injection-mouldable, dielectric material, and a sealing (8) provided in said through hole and provided with a through hole for the receipt of an electric conductor (6). The sealing (8) is formed from an injection-mouldable material. The bushing has been produced in a two-step injection moulding process, in which a second component has been moulded onto a first of the components.

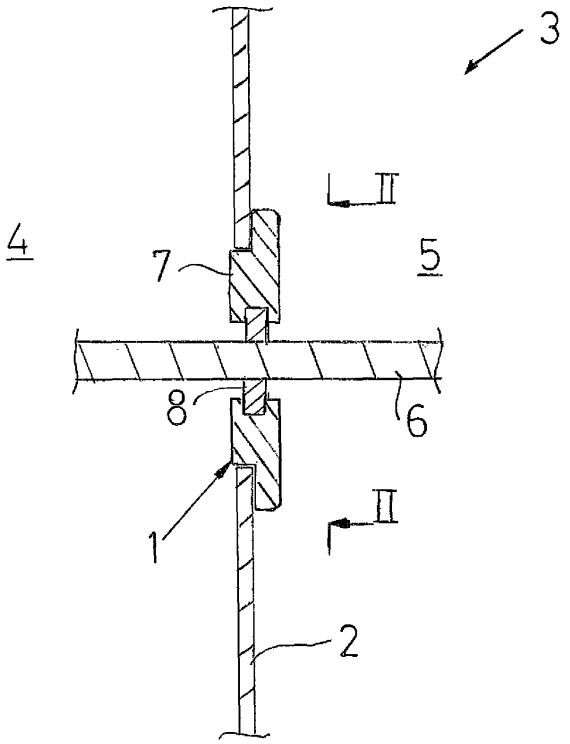

FIG.1

EP 2 083 426 A1

Description

TECHNICAL FIELD

[0001] The present invention relates to a bushing comprising: an electrically insulating body, provided with a through hole and formed by an injection-mouldable, dielectric material, and a sealing, provided in said opening and provided with a through hole for the receipt of an electric conductor.

[0002] The invention also relates to an electric power distribution installation, typically but not necessarily a switchgear, comprising: a housing, or compartment, provided a through hole in a wall thereof; a bushing arranged in said through hole; and an electric conductor extending through said bushing into said housing.

[0003] Further, the invention also relates to a method of producing such a bushing, wherein the method comprises the step of injection moulding an electrically insulating body with at least one through hole therein.

[0004] A bushing may be referred to as an electrically insulating component arranged for the purpose of electrically insulating an electric conductor from any wall or the like that the latter extends through, wherein there is a difference in electric potential between said wall and the conductor. Normally, the wall is connected to ground. Preferably, the bushing is a medium voltage bushing, wherein medium voltage is referred to as 1-36 kV. The bushing may be any kind of bushing. For example, it may be of elongated shape and designed so as to promote a connection of the conductor extending through it to a cable, or it may be plate-shaped, typically when forming a bushing in a partition wall in a switchgear.

BACKGROUND OF THE INVENTION

[0005] Bushings for the insulation of conductors extending through partition walls in switchgears, typically so called air-insulated switchgears, comprise a main body of an electrically insulating material. The main body of the bushing is supposed to be attached to the partition wall, and it is provided with at least one through hole through which an electric conductor will extend.

[0006] Traditionally, the electrically insulating main body of the bushing has been formed by a thermosetting resin moulded to the shape of said body. However, there has also been suggested to use a thermoplastic resin that is injection moulded in order to form said insulating body.

[0007] In the plate-shaped bushings that are used in the partition walls of medium voltage switchgears there is normally also provided a sealing for the purpose of preventing electric arc or the like to pass through any spacing between the outer periphery of the conductor and the inner periphery of the through hole of the insulating body. The sealing is provided in the through hole of the insulating body and is provided with a through hole through which the conductor extends, wherein the sealing is in direct contact with the conductor on one hand and with the insulating body on the other hand. The insulating body forms a rigid part able of carrying certain mechanical loads, such as the ones exerted by it own weight and by the conductor or conductors extending through it, while the sealing forms a more flexible part that have as its main purpose to perform said sealing function.

[0008] According to prior art, the sealing is formed by a ring-shaped component made of rubber. During production of the bushing, the sealing is produced separately and is inserted into the through hole of the insulating body. Finally the conductor is inserted into the through hole of the already inserted sealing.

THE OBJECT OF THE INVENTION

[0009] It is an object of the present invention to provide a bushing that has a design that promotes a more efficient production thereof. Accordingly it is also an object of the invention to provide an improved method of producing a bushing, which is more cost-efficient than production processes of prior art.

SUMMARY OF THE INVENTION

[0010] The object of the invention is achieved by means of the bushing as initially defined, characterised in that the sealing is formed by an injection-mouldable material. By using an injection-mouldable material for the insulating body as well as for the sealing, a two-step moulding procedure in which the components are moulded one after the other, is permitted. Such a procedure is both cost-efficient and well-suited for automated and industrial production and is therefore advantageous.

[0011] Preferably, said injection-mouldable material forming the sealing comprises a thermoplastic polymer. Among materials considered for injection moulding, thermoplastic polymers, or resins forming such polymers, are preferred thanks to their inherent moulding properties. It should be mentioned that it is preferred that also the electrically insulating body is formed by a thermoplastic polymer. Preferably, the material of the insulating body is more rigid and able of carrying mechanical load than is the material of the sealing. Accordingly, it is preferred that the material of the sealing is more flexible and more elastic than that of the insulating body.

[0012] According to a preferred embodiment, said injection-mouldable material forming the sealing comprises a thermoplastic elastomer or thermoplastic rubber. Thermoplastic elastomers and thermoplastic rubbers have the advantage of presenting a flexibility making them suitable for the sealing as defined herein. They are also easily injection moulded.

[0013] Preferably, said injection-mouldable material forming the sealing has a melting temperature above 100 °C, preferably above 120 °C. During operation, an electric conductor extending through the sealing and being in

direct contact with the latter will present an elevated temperature. In contemporary medium voltage switchgears the temperature of the conductor in the region of the sealing may exceed 100 °C. Therefore, the melting temperature of the sealing material needs to be above, preferably well above, that level.

[0014] Preferably, the injection-mouldable material forming the sealing is thermally stable above 100 °C. Since the sealing is assumed to be subjected to the impact of the elevated temperature of the electric conductor during long time, it is required from the material thereof that it will not degrade too rapidly. Being thermally stable is therefore referred to as having consistent or maintained physical properties, such as flexibility and elasticity, during the equipments lifetime, typically at least 30 years.

[0015] According to a preferred embodiment said injection-mouldable material forming the sealing is Silicone-based. Silicone-based materials, such as thermoplastic elastomers, have present a high thermal stability, and are therefore suitable for this application.

[0016] According to an alternative embodiment, the injection-mouldable material forming the sealing is based on an ester. Esters have the advantage over silicone-based compositions of being cheaper to produce, while still presenting suitable properties from a technical point of view, and are therefore a considered alternative as sealing material.

[0017] Preferably, said sealing is electrically insulating. In other words, the material forming the sealing should be a dielectric material. This will increase the total insulation length of the bushing, thereby increasing its dielectric strength.

[0018] Preferably, the sealing is moulded such that it is integrated with the insulating body. Thereby, a very good and tight cohesion or adhesion between the two components may be achieved. Integrated may be referred to as even being chemically adhered to each other at the interface between the two components. Since one of the components may be moulded onto the other component, engagement through a mechanical interlocking of the components is also facilitated. Recesses and projections of the respective components by means of which interlocking is to be achieved may be of rather complicated shapes and still permit full engagement, since the component moulded in the second step will be able of reliably and fully filling recesses of the initially moulded component.

[0019] The invention also relates to an electric power distribution installation, preferably a switchgear, comprising a housing, or compartment, provided a through hole in a wall thereof, a bushing arranged in said through hole, and an electric conductor extending through said bushing into said housing, wherein the bushing is a bushing according to the invention.

[0020] The object of the invention is also achieved by means of the initially defined method, characterise in that it comprises the further step of injection moulding a sealing provided with at least one through hole, wherein the sealing is located in said through hole of said insulating body. By injection moulding the insulating body as well as the sealing, a rational, cost-efficient production of the bushing is promoted. The materials used for the forming of the insulating body and the sealing may be as described above for the invented bushing.

[0021] According to a preferred embodiment said moulding is a two-step process in which one of said insulating body and sealing is moulded in a first step and a second of said insulating body and sealing is moulded in a second step, onto the already moulded component.

[0022] According to one embodiment, the moulding of the sealing is performed subsequent to the moulding of the insulating body. Thereby, it is preferred that the insulating body forms part of the mould in which the sealing is moulded, and that the material of the sealing is permitted to solidify while being in contact with the material of the insulating body. Preferably, the materials of the insulating body and the sealing, as well as the moulding variables are chosen such that a chemical cohesion between the materials are obtained in the interface region.

[0023] Preferably, when the bushing has been produced in the manner described above, the method further comprises the step of inserting an electric conductor in said through hole of said sealing. Accordingly, this is a preferred way of producing a bushing in which the conductor need not be incorporated in the bushing from the beginning, but may instead be incorporated into the latter after the production of the insulating body and the sealing.

[0024] According to an alternative embodiment, the insulating body is moulded subsequent to the moulding of the sealing. In such a case, it is preferred that the sealing is moulded around and onto an electric conductor acting as a core during said injection moulding of the sealing, whereupon the insulating body is moulded onto the sealing.

[0025] In the above description it has been described that the electric conductor should be in direct contact with the sealing along its outer periphery. It should be understood that, depending on the design of the sealing and the insulating body, also the latter may be in direct contact with the conductor, and that the invention does not excluded such designs. However, it is preferred that, in the region in which the sealing is in contact with the outer periphery of the conductor, this contact should be continuous along the circumference of the conductor, i.e. all the way around the conductor, irrespectively of the shape of the outer periphery of the latter, either it be circular, rectangular or of any other suitable shape.

[0026] Further features and advantages of the present invention will be disclosed in the following detailed description.

BRIEF DESCRIPTION OF THE DRAWINGS

[0027] The invention will now be described more in detail with reference to the accompanying drawing on

which.

Fig. 1 is a schematic side view of a part of a switchgear provided with a bushing according to the invention,

Fig. 2 is a front view of the bushing shown in fig. 1, and

Fig. 3 is a cross-section of a second embodiment of bushing according to the invention.

DETAILED DESCRIPTION OF THE INVENTION

[0028] Fig. 1 shows a first embodiment of a bushing 1 according to the invention mounted in its operative position in a partition wall 2 of a switchgear 3 a part of which is shown in fig. 1. The switchgear 3 comprises several compartments two neighbouring of which 4, 5 are separated by the partition wall 2 in which the bushing 1 is mounted. The bushing 1 is provided for the purpose of electrically insulating an electric conductor 6 that extends through said partition wall 2 from the partition wall 2, and preventing discharges or arcs from upcoming between the conductor 6 and the wall 2. The compartments 4, 5 of the switchgear 3 may be filled with an inert gas such as SF6 or may be filled with air (air-insulated switchgear). The electric conductor 6 may be referred to as a bus bar and may carry a medium voltage. There will generally be three electric conductors, one for each electric phase, extending through the partition wall 2. There may be provided one or more bushings in the partition wall. An individual bushing may be designed so as to be penetrated by a plurality of electric conductors or, as in the embodiment shown here, only by one conductor. However, the scope of the invention is primarily not restricted by the number of conductors extending through the bushing, nor the number of bushings that are mounted in a partition wall of a switchgear.

[0029] The bushing 1 comprises an electrically insulating body 7 provided with a through hole in which there is provided a sealing 8, which in its turn is provided with a through hole through which the conductor 6 extends. The primary task of the insulating body is to electrically insulate the conductor 6 from the wall 2, the latter preferably being connected to earth, i.e. carrying earth potential. The insulating body 7 is a load carrying component, carrying its own weight as well as any force applied thereto by the conductor 6 and the sealing 8. Accordingly, it is made of a material or materials enabling such functionality. In order to permit a rational and cost-effective production thereof, the insulating body 7 is formed by an injection-mouldable material, preferably a thermoplastic polymer.

[0030] The sealing 8, on the other hand, is made of a material which is more flexible or elastic than that of the insulating body 7, and has as its primary task to seal the space between the insulating body 7 and the conductor 6 such that arc or electric discharges are not likely to pass trough said space. In those cases when at least one of the compartments 4, 5 divided by the partition wall 2 is filled with an inert, and possibly pressurised, gas, the sealing 8 may also have as its task to form a gas tight sealing, thereby preventing gas from passing between the insulating body 7 and the sealing 8 or between the conductor 6 and the sealing 8 from one compartment to the other. The sealing is of such material that it will fit tightly around the conductor, preferably such that it maintains such tight fit also upon thermally induced volumetric changes of the conductor or upon motion thereof that may occur during operation or due to external affection. Preferably, the sealing 8 is formed by a thermoplastic elastomer, preferably an ester-based elastomer or a silicone-based elastomer. The chosen material for the sealing 8 should be able of standing the heat developed by the conductor 6 during operation. Therefore, the melting point of the sealing material should exceed a predetermined maximum operation temperature of the conductor in the region of the sealing 8. The sealing material should also be chosen such that it be chemically and physically stable at or below said maximum temperature, i.e. such that it does not degrade during operation due to the heat that it is subjected to.

[0031] Fig. 2 shows a front view of the bushing shown in fig. 1, in which a cross-section of the conductor 6 is also indicated. The conductor 6 is formed from a metal such as copper or aluminium or any other metal suitable for the application in question. It may have any cross-sectional shape. However, a generally rectangular shape with rounded edges like the one shown in fig. 2 is commonly used in connection to conventional air-insulated switchgears.

[0032] The bushing shown in figs. 1 and 2 has been produced in the following way. Initially, a thermoplastic resin, that upon solidification thereof will form a thermoplastic polymer is injection-moulded in a mould in order to form the electrically insulating body 7. Subsequently, after solidification of the insulating body 7, the solidified body is moved to another mould, or the mould is slightly modified, in order to enable injection moulding of the sealing 8 onto the already moulded body 7 in said other or modified mould. The chosen temperatures and materials are preferably such that a mechanical or chemical cohesion between the sealing 8 and the surrounding body 7 is achieved upon solidification of the sealing material. Finally, subsequent to the solidification of the sealing 8, and after mounting of the body 7 and sealing 8 in the partition wall 2 of the switchgear 3, the electric conductor is forced through the through opening of the sealing 8 and connected to further parts of the switchgear, as is well known in this field of technology. Accordingly, the production of the bushing 1 is a two-step injection-moulding of two different materials.

[0033] The bushing 1 shown in figs. 1 and 2 has a rather plate-shaped or flat insulating body 7. It should be understood that the invention is not restricted to such a design. For example, the insulating body may comprise

flanges or the like extending from its large sides, i.e. from its extension plane.

[0034] Fig. 3 shows an alternative embodiment of a bushing. The bushing 9 in fig. 3 is of a kind adapted to be connected to a cable. The bushing 9 has an elongated shape, wherein at least one end thereof is adapted to be connected to a cable (not shown). This bushing may be produced in an alternative manner compared to the method described for the bushing shown in figs. 1 and 2. In this case, it is preferred that the sealing 10 is moulded onto the conductor 11, wherein the latter forms part of the bushing 9 and also defines a core during said injection moulding of the sealing 10. After moulding of the sealing 10, the mould is changed or modified, after which the material used for forming the insulating body, here reference number 12, is injection moulded onto the sealing 10 and onto the conductor 11. As a consequence thereof, it is fully possible that the insulating body 12 is in direct contact with the conductor 11 along at least a part of the latter. Somewhere along the length thereof, however, the conductor 11 circumferentially enclosed by and in circumferentially continuous contact with the sealing 10, which, in its turn, is circumferentially enclosed by and in circumferentially continuous contact with the insulating body 12. As in the previous embodiment, it is preferred that the moulding parameters and the chosen materials of the sealing 10 and the insulating body 12 are such that a chemical adhesion or cohesion between the sealing 10 and the surrounding insulating body 12 is achieved. The materials chosen for the respective components may correspond to those already mentioned with reference to the embodiment shown in figs. 1 and 2.

[0035] It should be mentioned that the embodiments shown in the drawings are only schematic representations of bushings, and that details such as attachment means for attaching the bushing to the partition wall have been left out since the invention is primarily directed to the choice of materials and the production method. Also, suitable dimensions and designs of the bushings will be obvious for a person skilled in the art, without being needed to be specifically shown in this context.

Claims

1. A bushing (1, 9) comprising

- an electrically insulating body (7, 12) provided with a through hole and formed by an injection-mouldable, dielectric material, and
- a sealing (8, 10) provided in said through hole and provided with a through hole for the receipt of an electric conductor (6, 11),

characterised in that

- the sealing (8, 10) is formed by an injection-mouldable material.

2. A bushing according to claim 1, **characterised in that** said injection-mouldable material forming the sealing (8, 10) comprises a thermoplastic polymer.

3. A bushing according to claim 1 or 2, **characterised in that** said injection-mouldable material forming the sealing (8, 10) comprises a thermoplastic elastomer or a thermoplastic rubber.

4. A bushing according to any one of claims 1-3, **characterised in that** said injection-mouldable material forming the sealing (8, 10) has a melting temperature above 100 °C, preferably above 120 °C.

5. A bushing according to any one of claims 1-4, **characterised in that** said injection-mouldable material forming the sealing (8, 10) is thermally stable above 100 °C.

6. A bushing according to any one of claims 1-5, **characterised in that** said injection-mouldable material forming the sealing (8, 10) is Silicone-based.

7. A bushing according to any one of claims 1-6, **characterised in that** said injection-mouldable material forming the sealing (8, 10) is based on an ester.

8. A bushing according to any one of claims 1-7, **characterised in that** said sealing (8, 10) is electrically insulating.

9. A bushing according to any one of claims 1-8, **characterised in that** the sealing (8, 10) is moulded such that it is integrated with the insulating body (7, 12).

10. An electric power distribution installation (3) comprising

- a housing (4, 5) provided a through hole in a wall (2) thereof,
- a bushing (1, 9) arranged in said through hole, and
- an electric conductor (6, 11) extending through said bushing (1, 9) into said housing (4, 5),

characterised in that

- the bushing (1, 9) is a bushing according to any one of claims 1-9.

11. A method of producing a bushing comprising the step of

- injection moulding an electrically insulating body (7, 12) with at least one through hole therein, and **characterised in that** it comprises the further step of
- injection moulding a sealing (8, 10) provided

with at least one through hole, wherein the sealing (8, 10) is located in said through hole of said insulating body (7, 12).

12. A method according claim 11, **characterised in that** said moulding is a two-step process in which one of said insulating body (7, 12) and sealing (8, 10) is moulded in a first step and a second of said insulating body (7, 12) and sealing (8, 10) is moulded in a second step, onto the already moulded component.

13. A method according to claim 11 or 12, **characterised in that** the moulding of the sealing (8) is performed subsequent to the moulding of the insulating body (7).

14. A method according to any one of claims 11-13, **characterised in that** it comprises the step of inserting an electric conductor (6) in said through hole of said sealing (8).

15. A method according to claim 11, **characterised in that** the insulating body (12) is moulded subsequent to the moulding of the sealing (10).

16. A method according to claim 15, **characterised in that** the sealing (10) is moulded around and onto an electric conductor (11) acting as a core during said injection moulding of the sealing (10).

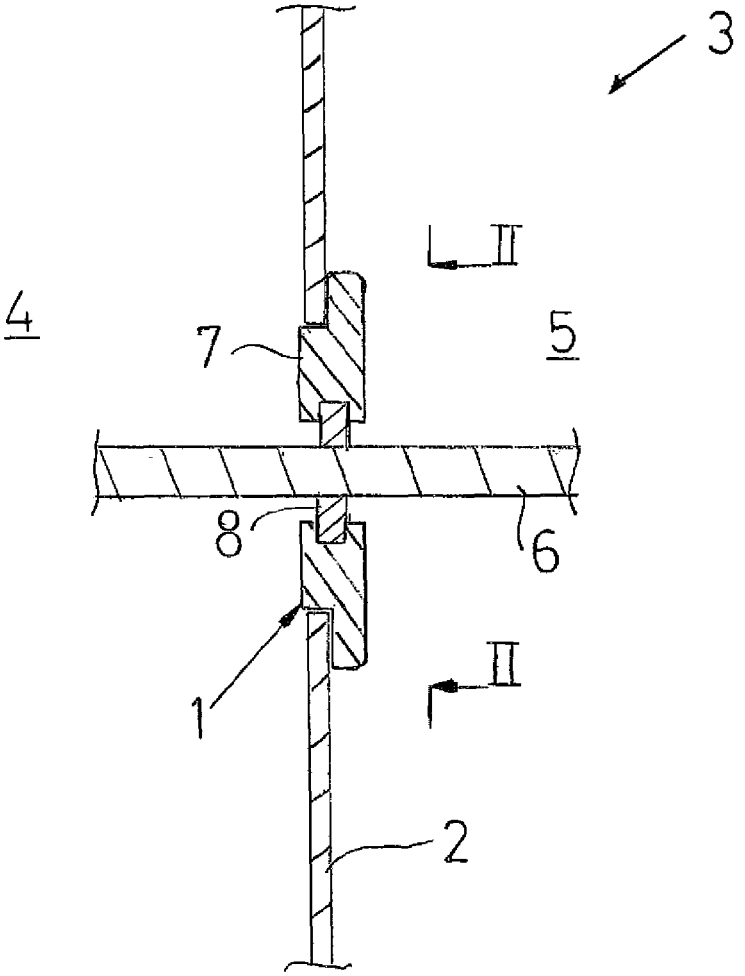

FIG.1

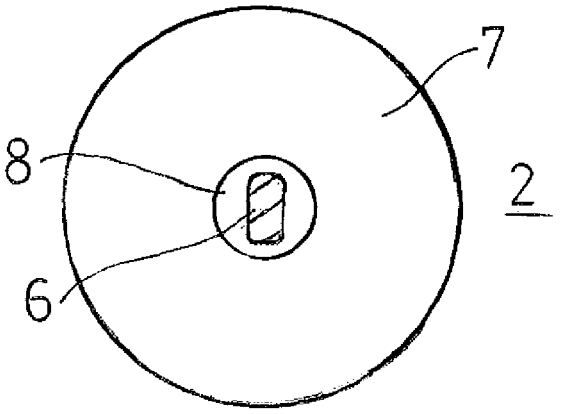

FIG. 2

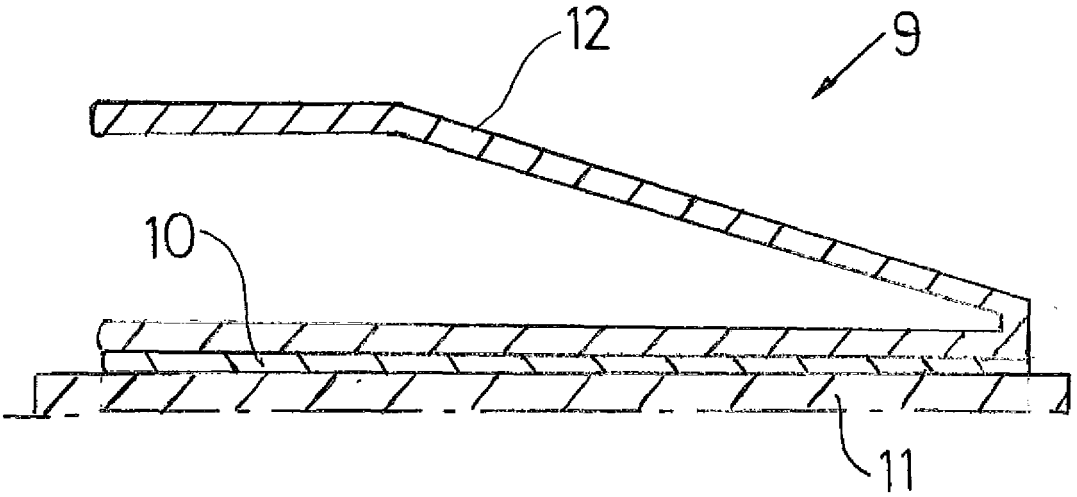

FIG.3

European Patent Office

EUROPEAN SEARCH REPORT

Application Number
EP 08 10 0970

DOCUMENTS CONSIDERED TO BE RELEVANT

Category	Citation of document with indication, where appropriate, of relevant passages	Relevant to claim	CLASSIFICATION OF THE APPLICATION (IPC)
X	DE 93 03 455 U1 (WECO WESTER EBBINGHAUS & CO [DE]) 7 October 1993 (1993-10-07) * claims 3,5,6 *	1-16	INV. H01B17/30
X	WO 03/067612 A (EMERSON ELECTRIC CO [US]; QUADIR TARIQ [US]) 14 August 2003 (2003-08-14) * the whole document *	1-16	
X	US 4 791 247 A (CACALLORO PHILIP A [US] ET AL) 13 December 1988 (1988-12-13) * column 3, lines 7-22 *	1-8,10, 11	
X	DE 10 2005 059754 A1 (SIEMENS AG [DE]) 21 June 2007 (2007-06-21) * paragraph [0007]; figure 1 *	1-10	
A	US 4 700 999 A (PROBST GEORG [DE]) 20 October 1987 (1987-10-20) * column 3, lines 2-45 *	1,10,11	
A	US 5 360 945 A (TRUESDALE JR ROBERT G [US] ET AL) 1 November 1994 (1994-11-01) * column 5, lines 11-29 *	1,10,11	

TECHNICAL FIELDS SEARCHED (IPC)

H01B

The present search report has been drawn up for all claims

Place of search	Date of completion of the search	Examiner
The Hague	20 June 2008	Overdijk, Jaco

CATEGORY OF CITED DOCUMENTS

X : particularly relevant if taken alone
Y : particularly relevant if combined with another document of the same category
A : technological background
O : non-written disclosure
P : intermediate document

T : theory or principle underlying the invention
E : earlier patent document, but published on, or after the filing date
D : document cited in the application
L : document cited for other reasons
.....
& : member of the same patent family, corresponding document

2

EPO FORM 1503 03.82 (P04C01)

ANNEX TO THE EUROPEAN SEARCH REPORT ON EUROPEAN PATENT APPLICATION NO. EP 08 10 0970

This annex lists the patent family members relating to the patent documents cited in the above-mentioned European search report.
The members are as contained in the European Patent Office EDP file on
The European Patent Office is in no way liable for these particulars which are merely given for the purpose of information.

20-06-2008

Patent document cited in search report	Publication date	Patent family member(s)	Publication date
DE 9303455 U1	07-10-1993	NONE	
WO 03067612 A	14-08-2003	AU 2003212964 A1	02-09-2003
		EP 1479085 A1	24-11-2004
		JP 2005517267 T	09-06-2005
		US 2003157831 A1	21-08-2003
		US 2004029443 A1	12-02-2004
US 4791247 A	13-12-1988	NONE	
DE 102005059754 A1	21-06-2007	WO 2007065912 A1	14-06-2007
US 4700999 A	20-10-1987	AU 575325 B2	28-07-1988
		AU 2883184 A	10-01-1985
		BR 8402894 A	21-05-1985
		CA 1221752 A1	12-05-1987
		DE 3324466 A1	17-01-1985
		DK 331984 A	08-01-1985
		EP 0134390 A1	20-03-1985
		ES 278942 U	16-09-1984
		IN 161126 A1	10-10-1987
		JP 3121629 U	12-12-1991
		JP 60037614 A	27-02-1985
		TR 21912 A	01-11-1985
US 5360945 A	01-11-1994	AT 156296 T	15-08-1997
		AU 667309 B2	21-03-1996
		AU 1918392 A	21-12-1992
		CA 2108130 A1	02-11-1992
		CN 1066322 A	18-11-1992
		DE 69221292 D1	04-09-1997
		DE 69221292 T2	05-03-1998
		EP 0582652 A1	16-02-1994
		JP 6507042 T	04-08-1994
		MX 9202051 A1	01-11-1992
		WO 9220077 A1	12-11-1992
		US 5557073 A	17-09-1996

EPO FORM P0459

For more details about this annex : see Official Journal of the European Patent Office, No. 12/82