(19) Europäisches Patentamt
European Patent Office
Office européen des brevets

(11) EP 1 462 179 B1

(12) **EUROPEAN PATENT SPECIFICATION**

(45) Date of publication and mention of the grant of the patent:
18.11.2009 Bulletin 2009/47

(51) Int Cl.:
B04C 5/00 *(2006.01)* ***B01D 50/00*** *(2006.01)*
B24B 55/10 *(2006.01)*

(21) Application number: **04250129.6**

(22) Date of filing: **13.01.2004**

(54) **Dust collection system**

System zum Sammeln von Staub

Système pour collecter la poussière

(84) Designated Contracting States:
AT BE BG CH CY CZ DE DK EE ES FI FR GB GR HU IE IT LI LU MC NL PT RO SE SI SK TR

(30) Priority: **27.03.2003 US 402441**

(43) Date of publication of application:
29.09.2004 Bulletin 2004/40

(73) Proprietor: **Witter, Robert M.**
Syracuse, New York 13207 (US)

(72) Inventor: **Witter, Robert M.**
Syracuse, New York 13207 (US)

(74) Representative: **Hackney, Nigel John et al**
Mewburn Ellis LLP
33 Gutter Lane
London
EC2V 8AS (GB)

(56) References cited:
DE-A- 4 113 305 **US-A- 5 746 795**

Note: Within nine months of the publication of the mention of the grant of the European patent in the European Patent Bulletin, any person may give notice to the European Patent Office of opposition to that patent, in accordance with the Implementing Regulations. Notice of opposition shall not be deemed to have been filed until the opposition fee has been paid. (Art. 99(1) European Patent Convention).

EP 1 462 179 B1

Printed by Jouve, 75001 PARIS (FR)

Description

[0001] This invention is directed to devices and equipment for removing process dust coming from a dust generating machine, such as a sanding machine, and separating the dust from exhaust air flowing from the machine. The invention is more specifically directed to a compact and efficient system for removing the production dust from the work area to a dust collection station located beyond the work area, and which removes a majority of the air from the dust flow.

[0002] For many types of machines for processing a workpiece, some means has to be provided to dispense with the grindings, chips, and particulate matter that is generated by the machine during operation. For example, in the case of wood working machines, such as sanders, joiners, and the like, wood that is removed from a workpiece has to be collected and removed from the work area so as to avoid either a breathing hazard for the workman or a fire hazard. More specifically, in the case of portable equipment, such as floor sanders and edgers, it is conventional to draw off the dust that is generated by the machines and then send the air that is carrying the dust into a filter bag arrangement. An alternative technique is to attach a flexible hose or conduit to the dust outlet duct of the machine, and pump the air in the conduit, plus the entrained dust, to a collection station outside. For hand-held and mobile power tools, such as floor sanding equipment, the associated dust collection systems currently in use are cumbersome, impractical, or inadequate.

[0003] Two systems are currently in use. In one system, a blower on the machine is used to extract dust from the sanding or cutting operation, and the air and entrained dust go into a filter to collect the dust and filter the air. Work operations have to be suspended frequently to clean the filter and dispose of the collected dust. These maintenance-intense systems blind or clog readily, which reduces the pickup volume at the source, allowing the particulate waste to become airborne or to interfere with the operation. In the second system a flexible hose connects the unit to an external dust collection unit which draws the waste from the tool. These systems do not deliver the necessary air volume to the tool because of intrinsic mechanical problems of delivering air through the extended lengths of flexible tubing. Huge energy requirements and high air velocities are necessary to overcome frictional losses. Frictional losses in ducts increase exponentially with air velocity, so very wide diameter tubing is used, and this relatively large tubing, being quite cumbersome, hinders the operator in using the machine.

[0004] The system of long flexible hoses for collecting dust from portable wood sanding machines generally require a combination of a number of different hoses of various diameters, and a series of air pumps and blowers to maintain a satisfactory air draw. In addition, because all of the air that exits the sanding machine has to be carried all the way out to a remote collection station, the flexible hoses are required to have a rather large diameter.

[0005] A filter bag that is carried on the portable sanding machine is generally not satisfactory for a number of reasons. First, the bags are either too porous and do not remove enough particulates from the air, or are too fine and tend to clog after a period of operation, choking off the flow of exhaust air from the machine. Also, the bag collection system concentrates the fine particulates of a combustible material (wood dust), and this dust can ignite if a spark or heated material from the sanding operation lands in the bag. Such a situation can produce an explosion, and thus exposes the worker to an unnecessary danger.

[0006] A number of cyclonic separators have been proposed, typically for separating particulate matter, such as grain, powders, or dust, from a flow of air. However, to date, no one has proposed or considered mounting a cyclonic separator on a portable sander or other dust generating device so as to concentrate the dust and allow a smaller air flow, and a smaller conduit, to be used in moving the dust to the remote dust collection station.

[0007] US5746795 discloses a cyclonic air cleaning device having a self cleaning, replaceable cartridge filter. The device essentially includes a barrel having a vortex tube concentrically positioned therein and a cylindrical, pleated filter cartridge concentrically positioned within the vortex tube, and a cone portion removably attached to and extending downwardly from the bottom of the barrel. The cone funnels debris to a collection receptacle securely attached to the bottom thereof. The filter is held in place by an upper plate fixedly secured to the vortex tube, a lower plate, and a T-bar extending centrally through the two plates and filter. A wing nut engages the bottom end of the T-bar in abutting relation to the bottom plate to hold the filter in place.

[0008] DE4113305 discloses an arrangement and assembly in which dust particles are separated from gases, and a gas rotary motion is set up such that a whirlpool is formed within the gas flow. An axial abstraction tube is positioned such that it removes gas from that part of the flow in which the highest speed and the lowest pressure prevails, and in which the dust particles are concentrated.

Objects and Summary of the Invention

[0009] The present invention provides a dust collection system as set forth in claim 1.

[0010] Preferably, it is an object of this invention to provide a highly energy efficient cyclonic separator-based dust collection system that avoids the drawbacks of the prior art.

[0011] Preferably, it is a more specific object to provide a dust collection system in which the air pressure drop is dramatically reduced as compared with prior art dust collection systems.

[0012] Preferably, it is a further object of this invention to provide a dust collection system in which a majority of

the separation of dust from the exhaust air and the filtering of the exhaust air are carried out at the dust-generating machine or tool.

[0013] Preferably, it is another object to provide dust collection system which reduces the power requirement, and also reduces the inherent fire or explosion hazard of the dust collection equipment.

[0014] According to an aspect of the invention, a compact and efficient dust collection system is provided for collecting production dust from a floor sander or other source machine that generates such dust in a production operation. The source machine has an internal blower for picking up the dust that the machine generates and exhausting the dust, entrained in a stream of air, to an exhaust outlet on the source machine. A compact, low-volume cyclonic separator is mounted on the source machine. The cyclonic separator has an inlet portion at the top, and an inner tubular baffle coaxial with the upper inlet portion and having open ends. The inlet portion and inner baffle define between them an annular inlet space. A frustoconic portion beneath the upper inlet portion and having a wide end joined at the inlet portion and this descends to a narrow lower end, where there is a dust outlet duct. An inlet duct receives the air flow and exhaust dust from the machine and injects this air flow into the annular inlet space. a pleated air filter, or equivalent air cleaning means, is situated above cyclonic separator for cleaning air that passes out through the tubular baffle. This permits the filtered clean air to return into the ambient air in the vicinity of the source machine. The dust is then concentrated at the bottom of the cyclonic separator. An elongated flexible duct or hose is coupled from the dust outlet duct of the cyclonic separator to a dust collection station positioned remote from said source machine. Because the dust is concentrated in the cyclonic separator, the air flow or volume required for conveying the dust to the dust collection station is reduced by a factor of between five and ten as compared with the systems discussed previously. This is because the secondary air flow between the separator and the dust collection station is used only for moving the pre-separated dust, and does not have to supply the correspondingly greater air volume that is required to extract the waste dust from the cutting operation at the tool. Because the secondary air flow is reduced so greatly, a much smaller diameter hose can be used, typically 19 to 25 mm (3/4 inch to 1 inch). This tubing can be bundled with the electric cord for the tool, and thus will not interfere with operation of the sander or other tool.

[0015] In a preferred embodiment, a rigid hollow conduit both serves as the tubing connecting the outlet of the machine to the cyclonic separator and as the means for supporting the cyclone separator on the machine.

[0016] The system can be run at a lower power requirement, e.g., at 110 volts, which is an advantage in that many non-commercial locations do not have 220 volts or three-phase power. The operator can continue to work without interruption, as the dust is carried to a much larger receptacle at the dust collection station. There is increased fire safety, as the heat and sparks that can result from the grinding or sanding operation are far from the dust storage location. An improved inlet port for the cyclonic separator permits superior dust pickup and better separation with less back pressure resulting from the separation. Industrial hygiene is vastly improved.

a second cyclonic separator can be used at the outside dust collection station, separating the dust from the incoming air flow, and dropping the dust from the nose of the cyclonic separator into a drum or similar receptacle.

[0017] Fig. 1 is a perspective system view of a dust collection system for a floor sander and an edger, according to one embodiment of this invention.

[0018] Fig. 2 is an assembly perspective view of the cyclonic separator that is mounted onto the floor sander, according to this embodiment.

[0019] Fig. 3 is a top view of the barrel of the cyclonic separator of Fig. 2.

[0020] Fig. 4 is a schematic elevation showing flow of air and waste for the cyclonic separator of Fig. 2.

[0021] Fig. 5 is a perspective view of the cyclonic separator that is mounted onto the edger machine according to this embodiment.

[0022] Fig. 6 shows the cyclonic separator of Fig. 5 with filter cartridge removed, and with some hidden elements illustrated in dash lines.

[0023] Fig. 7 shows the cyclonic separator that is mounted onto the collection drum at the dust collection station according to this embodiment.

[0024] Fig. 8 is a top view of the cyclonic separator of Fig. 7.

[0025] Now with reference to the Drawing, Fig. 1 shows a dust collection system according to an embodiment of this invention in which dust is separated from the air flow at the tool or machine, with the air being cleaned and returned to the ambient in the vicinity of the tool and with the dust being transported on a smaller volume air flow to a remote collection site.

a dust generating machine or tool, here a floor sanding machine 12, has a built-in exhaust blower 14 that vacuums up any sanding dust produced and discharges it upwards through an upright pipe 16. An inlet-connection ell 18 is mounted at a top end of the pipe 16, and a compact cyclonic separator 20 is supported on the ell 18. In this embodiment, the cyclonic separator 20 has a barrel or drum 22 at its upper end. The cyclonic separator can be described with additional reference to Figs. 2, 3, and 4. An inlet pipe 24 that fits into the ell 18 extends though the barrel 22, as will be discussed later. a tubular baffle 26, which has open upper and lower ends, is disposed coaxially within the separator barrel 22. This baffle 26 can be cylindrical in some cases, and here has a tapered, frustoconic shape. An upper annular plate 28 closes off the top of the barrel 22, with the baffle 26 extending to or penetrating through a central opening in this plate 28. The baffle 26 and barrel 22 define between them an inlet space 30 beneath the upper plate. a distal end 32 of the

inlet pipe 24 protrudes into a central portion of this inlet space 30, and this geometry reduces turbulence and back pressure at this point, providing a more efficient air flow.

a frustoconic cyclone portion 34 has a wide, upper mouth joined to the barrel 22, and the cyclone portion 34 tapers downward to a smaller opening at its nose, where a dust cup 36 collects the sanding dust that is separated from the spiraling internal air flow. An dust outlet pipe or exhaust pipe 38 protrudes from the dust cup 36, and an elongated flexible hose or conduit 40 (see Fig. 1) carries off the sanding dust in a small-volume air flow to an outside remote dust collection station 42. The dust collection station will be discussed later.

[0026] An air filter assembly 44 positioned atop the cyclonic separator 20 filters the air that flows from the sanding machine 12 and through the separator 20, and returns the filtered air back to the ambient space. As shown in Figs. 2 and 3, this assembly includes a vertical threaded post 46 mounted on a brace 48 across the mouth of the internal baffle 26, which extends upwards above the plate 28 along the vertical axis of the separator 20. A pleated cylindrical filter cartridge 50 is positioned here and held in place on the post 46 using a washer 60 and thumb nut 62.

[0027] In this embodiment, an upper portion 64 of the baffle 26 protrudes above the annular plate 28, forming a cylindrical flange that fits into a circular opening (not shown) in the base of the cartridge 50.

[0028] Figs. 3 and 4 illustrate the air flow through the cyclonic separator 20. The air enters via the inlet pipe 24 into the space 30, and then proceeds on a downward spiral path towards the dust cup 36 and the lower nose of the cyclone 34. The sanding dust remains in the cup, and the airflow proceeds upwards along the axis or core, through the baffle 26, and out through the filter assembly 44. The cyclonic separator presents only a small back pressure to the exhaust blower 14 on the machine 12, and only a minor air flow volume, provided as a suction or draw from the remote dust collection station 42, is needed to move the concentrated dust from the dust cup 36 out through the flexible conduit 40. This permits the conduit 40 to be small in diameter, e.g., 19 mm (3/4 inch) in most applications, up to 25 mm (one inch) and this is far less cumbersome than the large diameter conduits required by the prior and present remote-collection systems. The power cord for the machine can also be bundled with the flexible conduit 40, which has advantages for the operator.

[0029] As also shown in Fig. 1, a second tool can also be provided with a cyclonic dust collection system, and in this embodiment, an edge sander or edging tool 66 is shown. The edger 66 has an internal exhaust blower (not shown), which picks up process dust and blows it through an exhaust pipe 68, here a rigid tubular member that also supports a cyclonic separator 70. This separator can be of a smaller size than the separator 20. An inlet pipe 72 is fitted into the pipe 68 and extends Into a barrel 74 of the separator. An mner baffle 76 is disposed coaxial with the barrel 74. a frustoconic cyclone 78 is joined with the barrel 74 and tapers downwardly terminating at a dust cup 80, from which a dust outlet pipe 82 extends. A second flexible small-diameter conduit 40' then leads from the dust cup 80 to the remote collection station 42.

[0030] An annular plate 84 closes off the top of the barrel 74, and a support bracket 86, here formed with two upwardly extending legs, rises vertically above the opening at the center of the plate 84. a post 88 with internal female threads is supported on top of the bracket 86. a thumb wheel 90, having a male threaded shaft (not shown), is used to secure a pleated cylindrical filter cartridge 92 in place against the top of the cyclonic separator 70.

[0031] Details of the remote collection station 42 of this embodiment are illustrated in Fig. 1 with additional reference to Figs. 7 and 8. Here, a cyclonic separator 94 disposed at the remote station is of frustoconic shape, with an inlet pipe 96 that is fed from the conduits 40 and 40' with the process dust from the machines 12 and 66. a siamese connection can be used here. This separator also has an internal tubular baffle 98, disposed coaxial with the frustoconic separator 94, and having an upper portion that extends above the top of the separator to serve as an air exhaust port. a dust conduit extends downward from a nose of the separator 94 into a dust collection drum 100 (or other dust storage vessel). In this case a top of the drum 100 has a fitting 102 that connects with the dust conduit 100. As shown in the top view of Fig. 8, an upper annular plate 106 closes off the top of the cyclonic separator 94, and the inlet pipe 96 protrudes into the middle of the volume that is defined between the wall of the cyclonic separator 94 and the tubular baffle 98.

[0032] Referring again to Fig. 1, exhaust air from the separator 94 is carried via a conduit 108 to a filter unit 110 which removes remaining particulates in the exhaust air, and thence via another conduit 112 to an air pump 114. The pump provides a draw of vacuum that moves the dust, plus a relatively small flow of air, from the dust cups 36, 80 of the separators on the two tools, through the elongated flexible conduits 40 and 40' to the dust collection station 42, where the air flow continues through the cyclonic separator 94, so that the process dust ends up in the barrel 100.

[0033] Because the dust and exhaust are from the tool are separated out at the cyclone separators 20 and 70, only a small amount of air flow is needed to carry away the dust to the remote dust collection station 42. The air volume to the tool can be reduced by a factor of between five and ten times, because it is only used to extract the pre-separated waste, and is not supplying the considerably greater air volume needed to extract the waste from the cutting or sanding operation.

[0034] The independent stand-alone dust collection stations 42 downstream of the filter/separators 20 and 70 contains all the processing waste from the portable processing equipment, which is recovered by means of

a small negative pressure operating through the cyclone separator 94. The drum or barrel 100 can be provided with a plastic bag liner. As the dust barrel is at a negative pressure, a vacuum bag hold down feature, in which a hose 116 extends from the pump 114 to a vacuum inlet fitting on the barrel 100, to maintain a vacuum or negative pressure between the barrel and the plastic bag liner to draw and hold the bag to the inside of the barrel. The bag can be tied off and lifted out when full, thus eliminating the need to dump. This also keeps the operators from being exposed to the fines and dust contained in the bag. The independent stand-alone nature of the waste collection drum or barrel 100 also allows for different size barrels to be interchanged easily and cost effectively, accommodating the scope of the project and the volume of waste material to be collected.

[0035] The advantages over the prior art dust collection systems can be quickly summarized as follows: There is a low power/low energy requirement, and the system can be powered entirely from a 110V single phase supply. The small flexible tubing 40 for carrying the dust from the tools makes machine operation vastly easier, and the tubing can even be bundled with the power cord for the tool. The operator does not need to interrupt the sanding, grinding, or finishing process for the purpose of unclogging or emptying bags or filters, or for removing waste bags from the tool or machine, as the waste material is carried continuously from the tool to a large off-worksite container. There is improved fire safety as any friction-induced flame or sparks will not reach the storage location for the combustible waste materials; that is, the waste collection barrel is far downstream of the grinding or sanding operation, and is at a location far from the operator. The high-efficiency cyclone separators, with low pressure drop inlet tubes, provide for superior dust pick up at the tool, and permit the waste material to be carried off without significant back pressure. The filter service interval is also very long, and pressure loss through the filter cartridges is also very low. The filtration of air and separation of dust vastly improves the industrial hygiene for the operators.

[0036] While the invention has been described hereinabove with reference to a few preferred embodiments, it should be apparent that the invention is not limited to such embodiments. Rather, many variations would be apparent to persons of skill in the art. The scope of this invention, is defined in the appended Claims.

Claims

1. A dust collection system with a source machine and a dust collection station for collecting production dust from the source machine that generates such dust in a production operation, where the source machine has a blower for picking up said dust and exhausting the dust entrained in a stream of air to an exhaust outlet on the source machine; and in use the dust is conveyed through an elongated flexible duct coupled to the dust collection station positioned remote from said source machine, so that the dust plus a minor flow of air is carried to the dust collection station; and **characterized in that** a cyclone separator (20) is mounted on said source machine (12), said cyclone separator including a circular upper inlet portion (22), an inner tubular baffle (26) coaxial with the upper inlet portion and having open ends, the upper inlet portion and inner baffle defining between them an annular inlet space (30), a frustoconic portion (34) beneath the upper inlet portion and having a wide end joined to the upper inlet portion and a narrow lower end (36), a dust outlet duct (38) at said narrow lower end to which the flexible duct (40) is connected, an inlet duct (24) extending from outside the upper inlet portion into said annular inlet space; an air cleaning element (44) is mounted above upper inlet portion for cleaning air that passes out through said inner tubular baffle (26) and such that the air cleaning element (44) permits the air to return into ambient air in the vicinity of the source machine (12); and **in that** a first conduit (18) is coupled between the exhaust outlet on the source machine and the inlet duct of the cyclone separator.

2. A dust collection system according to Claim 1 further **characterized in that** said air cleaning element (44) includes a replaceable air filter removably positioned above said outer cylinder.

3. A dust collection system according to Claim 2 further **characterized in that** the air filter is in the form of a cylinder (50) mounted coaxially with said cyclone separator.

4. A dust collection system according to any of the preceding Claims further **characterized in that** the inlet duct (24) has a portion (32) that penetrates to a region of said annular inlet space (30) that is midway between said upper inlet portion and said inner tubular baffle.

5. A dust collection system according to any of the preceding Claims further **characterized in that** the first conduit (18) is a rigid hollow member that serves for supporting the cyclone separator (20) on the source machine.

6. A dust collection system according to any of the preceding Claims further **characterized in that** the inlet portion (22) and the tubular baffle (26) are in the form of coaxial cylinders.

7. A dust collection system according to Claim 3 further **characterized in that** a threaded post (46) extends upward at an axis of the tubular baffle (26) and rises above said cyclone separator (20), and **in that** one

or more female threaded fasteners (60, 62) serve for holding the filter in place on the threaded post (46).

8. A dust collection system according to any of the preceding Claims further **characterized in that** the dust collection station (42) employs a second cyclone separator(94) having an inlet port (96) to which said elongated flexible duct is connected, a dust collection drum (100) is positioned below a lower end of said second cyclone separator and receives the dust carried to it through the elongated flexible duct (40), a pump (114) draws air through the second cyclone separator (94), and an air filter (110) is interposed between an outlet baffle of the second cyclone separator (94) and the air pump (114).

9. A dust collection system according to any of the preceding Claims further **characterized in that** the elongated flexible conduit (40) is a hose of about 19 mm (3/4 inch) to 25 mm (one inch) in diameter.

Patentansprüche

1. Staubsammelsystem mit einem Quellengerät und einer Staubsammelstation zum Sammeln von Produktionsstaub vom Quellengerät, das solchen Staub in einem Produktionsprozess erzeugt, wobei das Quellengerät ein Gebläse zum Aufnehmen dieses Staubs und Ausstoßen des Staubs, der von einem Luftstrom mitgenommen wird, zu einem Austoßauslass am Quellengerät aufweist; und der Staub während des Betriebs durch eine lange, dünne, flexible Leitung, die mit der vom Quellengerät getrennt positionierten Staubsammelstation verbunden ist, befördert wird, sodass der Staub und ein geringer Luftstrom durch die Staubsammelstation geleitet werden; und **dadurch gekennzeichnet, dass** ein Zyklonabscheider (20) am Quellengerät (12) angebracht ist, wobei der Zyklonabscheider einen kreisförmigen oberen Einlassabschnitt (22), eine innere röhrenförmige, koaxial mit dem oberen Einlassabschnitt angeordnete Ablenkvorrichtung (26) mit offenen Enden, wobei der obere Einlassabschnitt und die innere Ablenkvorrichtung einen ringförmigen Einlassraum (30) zwischen sich definieren, einen kegelstumpfförmigen Abschnitt (34), der unter dem oberen Einlassabschnitt angeordnet ist und ein weites Ende, das mit dem oberen Einlassabschnitt verbunden ist, und enges unteres Ende (36) aufweist, eine Staubauslassleitung (38) am engen unteren Ende, mit der die flexible Leitung (40) verbunden ist, und eine Einlassleitung (24) umfasst, die sich von der Außenseite des oberen Einlassabschnitts in den ringförmigen Einlassraum hinein erstreckt; dass ein Luftreinigungselement (44) über dem oberen Einlassabschnitt angebracht ist, um Luft zu reinigen, welche sich durch die innere röhrenförmige Ablenkvorrichtung (26) hindurch bewegt, sodass das Luftreinigungselement (44) den Rücklauf der Luft in die Umgebungsluft in der Nähe des Quellengeräts (12) ermöglicht; und dass ein erstes Rohr (18) vorgesehen ist, das den Austoßauslass am Quellengerät mit der Einlassleitung des Zyklonabscheiders verbindet.

2. Staubsammelsystem nach Anspruch 1, weiters **dadurch gekennzeichnet, dass** das Luftreinigungselement (44) ein austauschbares Luftfilter umfasst, das abnehmbar über dem äußeren Zylinder platziert ist.

3. Staubsammelsystem nach Anspruch 2, weiters **dadurch gekennzeichnet, dass** das Luftfilter in Form eines Zylinders (50) vorliegt, der koaxial mit dem Zyklonabscheider angebracht ist.

4. Staubsammelsystem nach einem der vorangegangenen Ansprüche, weiters **dadurch gekennzeichnet, dass** die Einlassleitung (24) einen Abschnitt (32) aufweist, der zu einem Bereich des ringförmigen Einlassraums (30) hindurchgeht, der sich in der Mitte zwischen dem oberen Einlassabschnitt und der inneren röhrenförmigen Ablenkvorrichtung befindet.

5. Staubsammelsystem nach einem der vorangegangenen Ansprüche, weiters **dadurch gekennzeichnet, dass** das erste Rohr (18) ein starres hohles Element ist, das zur Befestigung des Zyklonabscheiders (20) am Quellgerät dient.

6. Staubsammelsystem nach einem der vorangegangenen Ansprüche, weiters **dadurch gekennzeichnet, dass** der Einlassabschnitt (22) und die röhrenförmige Ablenkvorrichtung (26) in Form von koaxialen Zylindern vorliegen.

7. Staubsammelsystem nach Anspruch 3, weiters **dadurch gekennzeichnet, dass** sich eine Gewindestange (46) auf einer Achse der röhrenförmigen Ablenkvorrichtung (26) nach oben erstreckt und über den Zyklonabscheider (20) hinausragt, und dass ein oder mehrere Innengewinde-Befestigungselemente (60, 62) dazu dienen, das Filter auf der Gewindestange (46) zu fixieren.

8. Staubsammelsystem nach einem der vorangegangenen Ansprüche, weiters **dadurch gekennzeichnet, dass** die Staubsammelstation (42) einen zweiten Zyklonabscheider (94) mit einer Einlassöffnung (96), mit der die lange, dünne, flexible Leitung verbunden ist, aufweist, ein Staubsammelbehälter (100) unter einem unteren Ende des zweiten Zyklonabscheiders platziert ist und den Staub aufnimmt, der durch die lange, dünne, flexible Leitung (40) dorthin transportiert wird, eine Pumpe (114) Luft durch den zweiten Zyklonabscheider (94) saugt und ein

Luftfilter (110) zwischen einer Auslass-Ablenkvorrichtung des zweiten Zyklonabscheiders (94) und der Luftpumpe (114) angeordnet ist.

9. Staubsammelsystem nach einem der vorangegangenen Ansprüche, weiters **dadurch gekennzeichnet, dass** die lange, dünne, flexible Leitung (40) ein Schlauch mit einem Durchmesser von etwa 19 mm (3/4 Zoll) bis 25 mm (ein Zoll) ist.

Revendications

1. Système de collecte de poussière avec une machine source et une station de collecte de poussière pour recueillir la poussière de production de la machine source qui produit une telle poussière lors d'une opération de production, où la machine source possède une soufflante pour aspirer ladite poussière et pour évacuer la poussière entraînée dans un flux d'air vers une sortie d'évacuation sur la machine source; et en cours d'utilisation, la poussière est convoyée à travers un conduit flexible oblong couplé à la station de collecte de poussière positionnée à distance de ladite machine source, de sorte que la poussière plus un flux d'air mineur est portée vers la station de collecte de poussière; et **caractérisé en ce qu'**un séparateur à cyclone (20) est monté sur ladite machine source (12), ledit séparateur à cyclone comportant une portion d'entrée circulaire supérieure (22), un déflecteur tubulaire intérieur (26) coaxial avec la portion d'entrée supérieure et ayant des extrémités ouvertes, la portion d'entrée supérieure et le déflecteur intérieur définissant entre eux un espace d'entrée annulaire (30), une portion tronconique (34) en dessous de la portion d'entrée supérieure et ayant une extrémité large reliée à la portion d'entrée supérieure et une extrémité inférieure étroite (36), un conduit de sortie de poussière (38) à ladite extrémité inférieure étroite auquel le conduit flexible (40) est connecté, un conduit d'entrée (24) s'étendant depuis l'extérieur de la portion d'entrée supérieure dans ledit espace d'entrée annulaire; un élément de nettoyage d'air (44) est monté au-dessus de la portion d'entrée supérieure pour l'épuration de l'air qui sort à travers ledit déflecteur tubulaire intérieur (26) et de façon que l'élément d'épuration d'air (44) permet à l'air de retourner dans l'air ambiant au voisinage de la machine source (12); et **en ce qu'**un premier conduit (18) est couplé entre la sortie d'échappement sur la machine source et le conduit d'entrée du séparateur à cyclone.

2. Système de collecte de poussière selon la revendication 1, **caractérisé en outre en ce que** ledit élément d'épuration d'air (44) comprend un filtre à air remplaçable positionné amoviblement au-dessus dudit cylindre extérieur.

3. Système de collecte de poussière selon la revendication 2, **caractérisé en outre en ce que** le filtre à air se présente sous la forme d'un cylindre (50) monté coaxialement audit séparateur à cyclone.

4. Système de collecte de poussière selon l'une quelconque des revendications précédentes, **caractérisé en outre en ce que** le conduit d'entrée (24) présente une portion (32) qui pénètre dans une région dudit espace d'entrée annulaire (30) qui se situe à mi-chemin entre ladite portion d'entrée supérieure et ledit déflecteur tubulaire intérieur.

5. Système de collecte de poussière selon l'une quelconque des revendications précédentes, **caractérisé en outre en ce que** le premier conduit (18) est un élément rigide creux qui sert à supporter le séparateur à cyclone (20) sur la machine source.

6. Système de collecte de poussière selon l'une quelconque des revendications précédentes, **caractérisé en outre en ce que** la portion d'entrée (22) et le déflecteur tubulaire (26) se présentent sous la forme de cylindres coaxiaux.

7. Système de collecte de poussière selon la revendication 3, **caractérisé en outre en ce qu'**un montant fileté (46) s'étend vers le haut selon un axe du déflecteur tubulaire (26) et s'élève au-dessus dudit séparateur à cyclone (20), et **en ce qu'**une ou plusieurs attaches filetées femelles (60, 62) servent à maintenir le filtre en place sur le montant fileté (46).

8. Système de collecte de poussière selon l'une quelconque des revendications précédentes, **caractérisé en outre en ce que** la station de collecte de poussière (42) utilise un deuxième séparateur à cyclone (94) ayant un orifice d'entrée (96) auquel ledit conduit flexible oblong est connecté, un tambour de collecte de poussière (100) est positionné en dessous d'une extrémité inférieure dudit deuxième séparateur à cyclone et reçoit la poussière entraînée vers lui travers le conduit flexible oblong (40), une pompe (114) aspire l'air à travers le deuxième séparateur à cyclone (94), et un filtre à air (110) est interposé entre un déflecteur de sortie du deuxième séparateur à cyclone (94) et la pompe à air (114).

9. Système de collecte de poussière selon l'une quelconque des revendications précédentes, **caractérisé en outre en ce que** le conduit flexible oblong (40) est un tuyau souple d'un diamètre d'environ 19 mm (3/4 pouce) à 25 mm (un puce).

Fig. 1

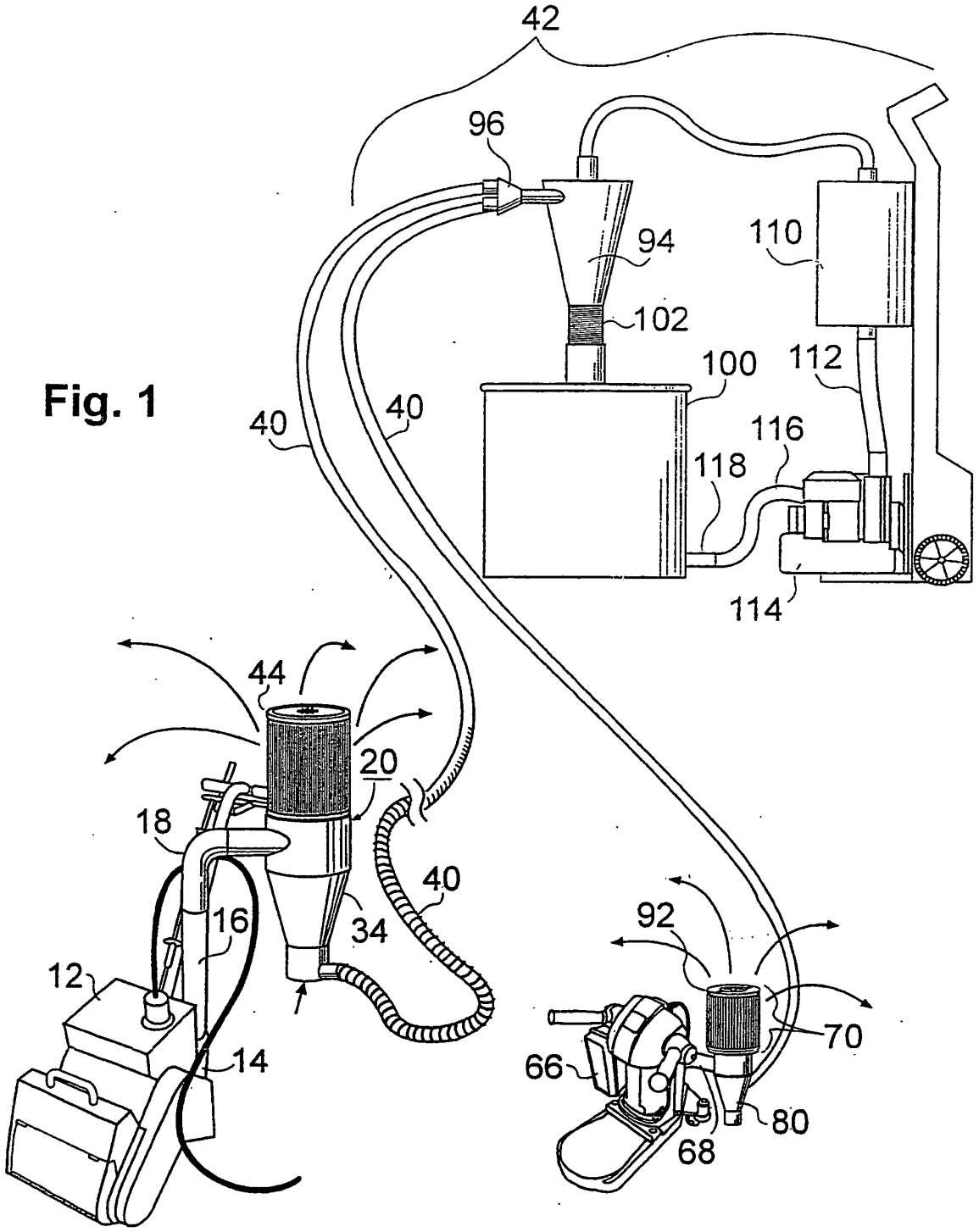
42
96
94
110
102
100
112
40
40
116
118
114
44
20
18
40
16
34
92
12
70
14
66
80
68

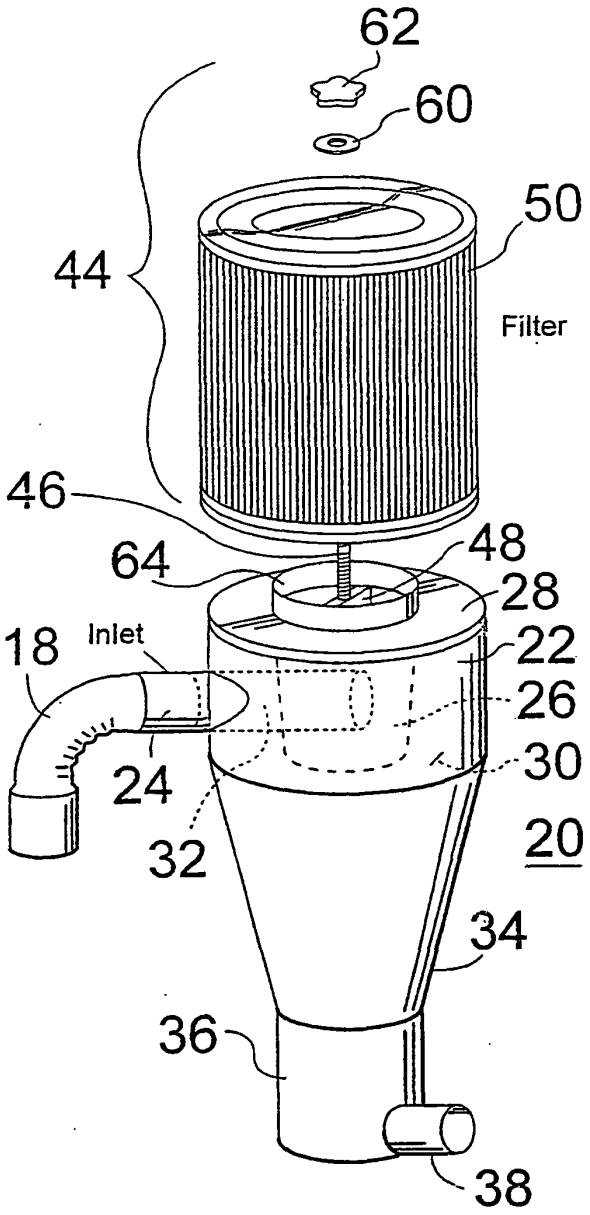

Fig. 2

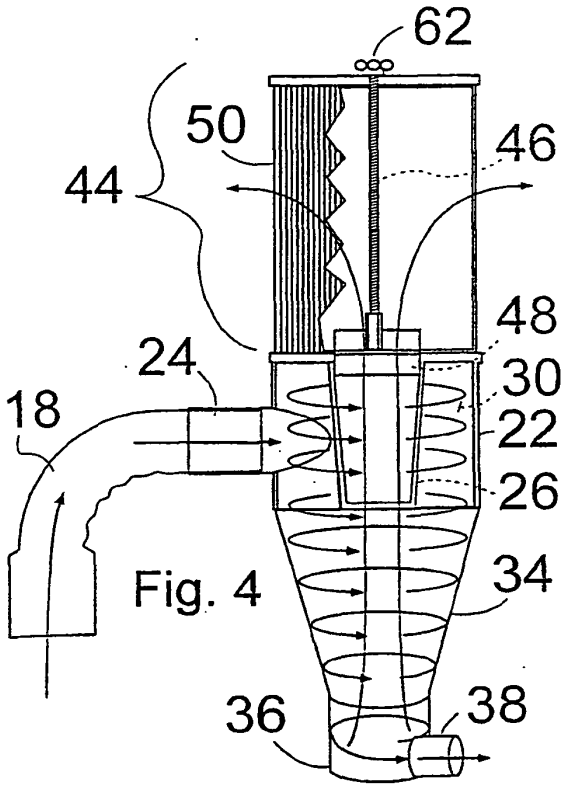

Fig. 4

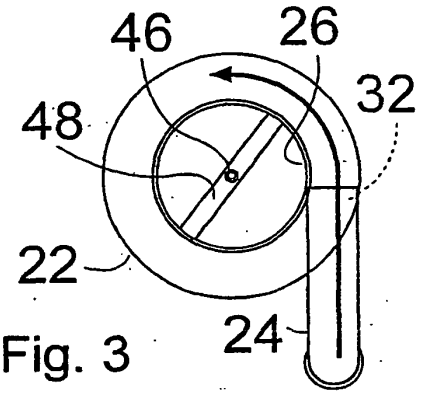

Fig. 3

Fig. 5

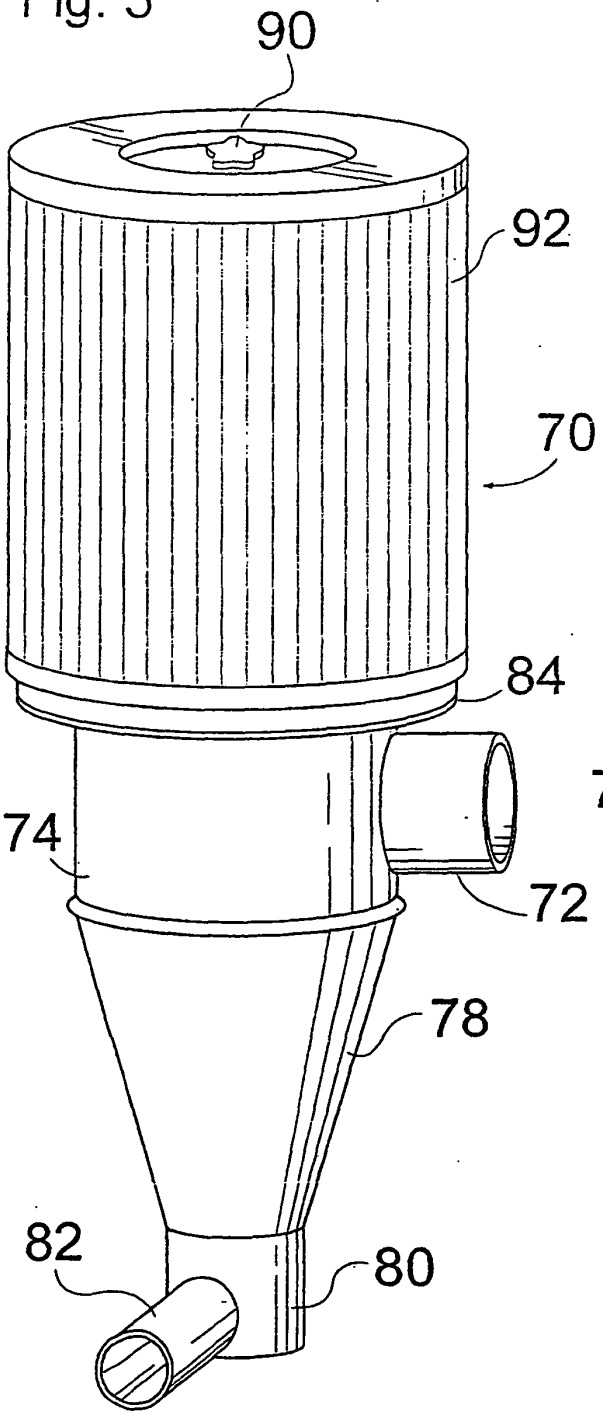

Fig. 6

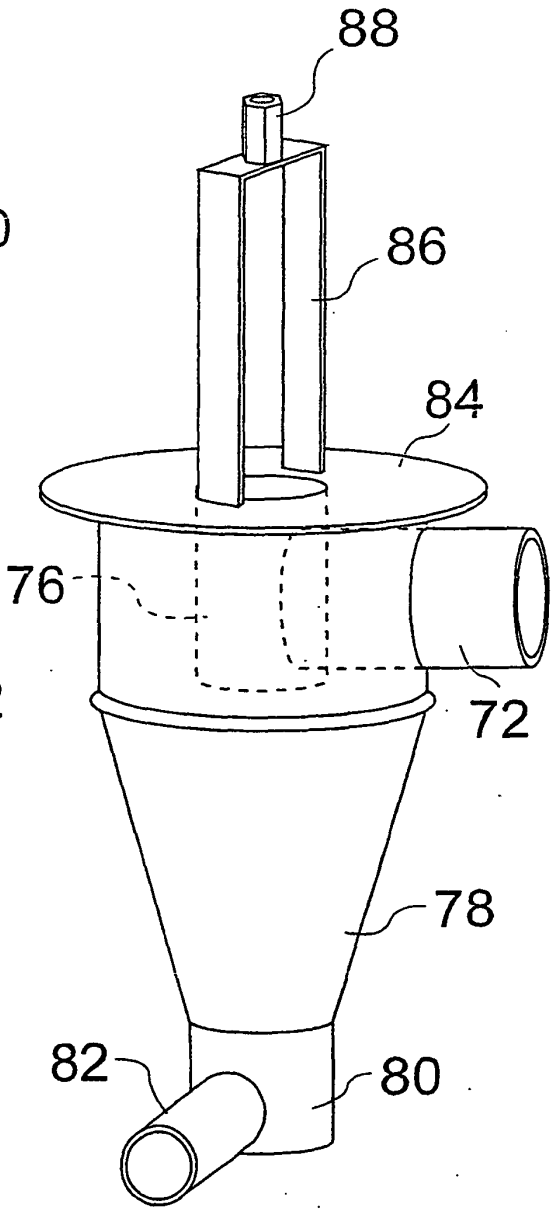

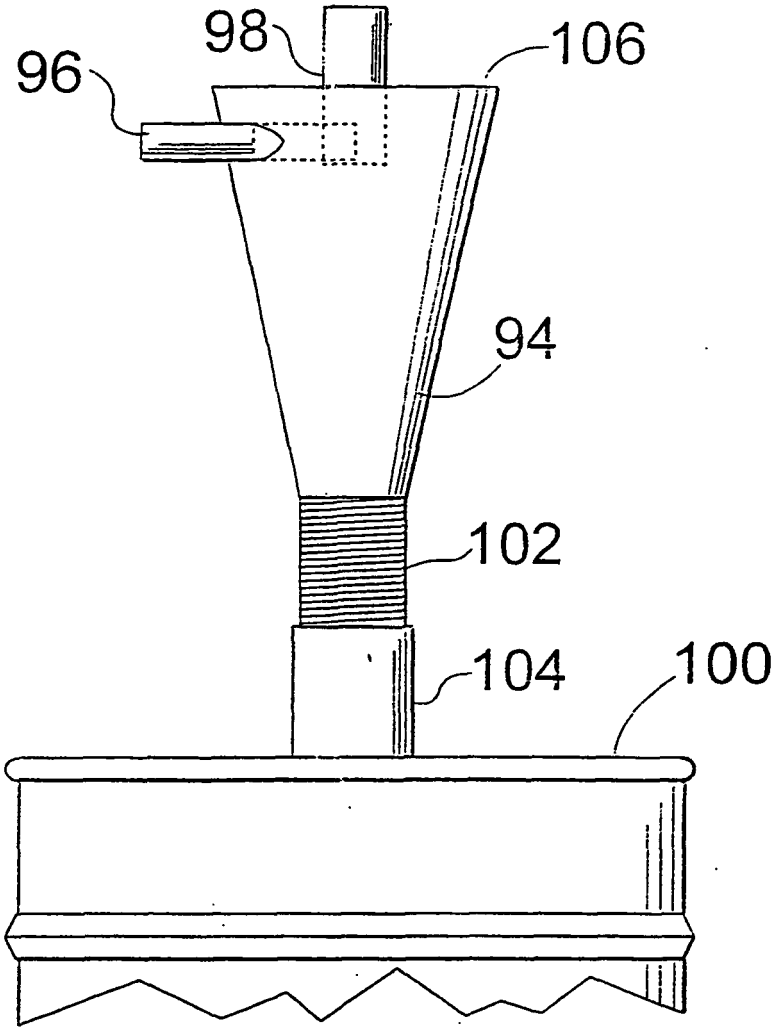

Fig. 7

Top View of Cyclone

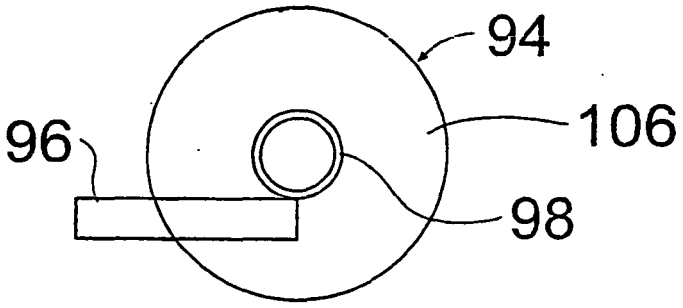

Fig. 8

REFERENCES CITED IN THE DESCRIPTION

This list of references cited by the applicant is for the reader's convenience only. It does not form part of the European patent document. Even though great care has been taken in compiling the references, errors or omissions cannot be excluded and the EPO disclaims all liability in this regard.

Patent documents cited in the description

- US 5746795 A **[0007]**
- DE 4113305 **[0008]**