(19) Europäisches Patentamt
European Patent Office
Office européen des brevets

(11) EP 1 953 783 B1

(12) **EUROPEAN PATENT SPECIFICATION**

(45) Date of publication and mention of the grant of the patent:
28.07.2010 Bulletin 2010/30

(51) Int Cl.:
H01H 50/02 *(2006.01)* *H01H 9/04* *(2006.01)*

(21) Application number: **07002134.0**

(22) Date of filing: **31.01.2007**

(54) **Electromagnetic relay**

Elektromagnetisches Relais

Relais électromagnétique

(84) Designated Contracting States:
DE

(43) Date of publication of application:
06.08.2008 Bulletin 2008/32

(73) Proprietor: **Nec Tokin Corporation**
Sendai-shi,
Miyagi (JP)

(72) Inventors:
- **Nishi, Yasuhisa**
Sendai-shi,
Miyagi (JP)
- **Ito, Hiromitsu**
Sendai-shi,
Miyagi (JP)

(74) Representative: **Glawe, Delfs, Moll**
Patent- und Rechtsanwälte
Postfach 26 01 62
80058 München (DE)

(56) References cited:
EP-A- 0 986 290 **EP-A- 1 026 716**
EP-A- 1 091 236 **GB-A- 2 029 107**
US-A- 4 427 863

Note: Within nine months of the publication of the mention of the grant of the European patent in the European Patent Bulletin, any person may give notice to the European Patent Office of opposition to that patent, in accordance with the Implementing Regulations. Notice of opposition shall not be deemed to have been filed until the opposition fee has been paid. (Art. 99(1) European Patent Convention).

EP 1 953 783 B1

Printed by Jouve, 75001 PARIS (FR)

Description

Field of the Invention

[0001] The present invention relates to an electromagnetic relay and more particularly to the electromagnetic relay that can be suitably used as vehicle-mounted electrical components.

Description of the Related Art

[0002] A conventional electromagnetic relay having a switching function by opening and closing of electrical contacts and being used widely and commonly as a vehicle-mounted component includes electrical contacts and a molded resin material in which a molded resin base and an electromagnetic driving portion formed on the molded resin base are covered with a molded resin cover and is sealed with a thermosetting sealing resin. In the case where the electromagnetic relay is fully hermetically sealed from the outside, an escape path for air formed inside the relay is shut and, therefore, hermeticity occurs readily due to a thermal stress caused by reflow heating especially at an interface between a metal and a resin each having a different thermal expansion coefficient or in a bonding portion between a molded resin and a sealing resin. In the electromagnetic relay in which hermeticity has occurred, water, solvent, or a like invade from the outside, which causes an operational failure and a contacting failure of contact portions.

[0003] Figure 6 is an exploded perspective view of a conventional electromagnetic relay. Figures 7A and 7B are cross-sectional views explaining a structure of a conventional molded resin cover of Figs. 6A and 6B, and Fig. 7A is a vertical sectional view of a conventional unsealed-type of a through hole and Fig. 7B is a vertical sectional view of a conventional sealed-type through-hole. In the conventional electromagnetic relay, as shown in Figs. 6A and 6B, an electromagnetic relay main body 3 assembled on a molded resin base 4 is covered with a molded resin cover 1 and is sealed with a sealing resin 5 and through-holes 2 are formed on a top surface of the molded resin cover 1. Conventionally, two types of the through- holes 2, one is an unsealed type of the through-hole in which an unsealed-type portion 2a shown in Fig. 7A is not shut while a sealed-type portion 2b shown in Fig. 7B is shut by fusing a top portion of the through-hole 2 and using a thermal caulking process at its top portion so that the electromagnetic relay is hermetically sealed.

[0004] If it is assumed that there is heat-stress caused by reflow heating on the electromagnetic relay, the above unsealed-type through-holes 2 (2a) are mainly used. However, in the case of the through-holes 2 formed on the top of the molded resin cover 1, since conditions for shapes and diameters are to be satisfied by considering moldability and workability of thermal caulking and since its aperture portion is wide, there is a risk that all kinds of substances on an outside of the electromagnetic relay invade easily into the electromagnetic relay. In particular, when the electromagnetic relay is used as a vehicle-mounted component by performing the reflow heating, in some cases, a coating agent is applied to all surfaces of the electromagnetic relay after being mounted on a printed circuit board and, in this case, the application of the coating agent to the through-holes 2 should be avoided. If the through-holes 2 are shut by the coating agent, the coating agent invades inside of the electromagnetic relay in some cases, causes an operational failure and/or contacting failure at contact portions. Moreover, a whole cleaning method in which the electromagnetic relay together with the printed circuit board are soaked should be also avoided. Thus, the unsealed through-holes 2 (2a) which do not provide a sealed state have a remarkably high risk and a limitation is imposed on the execution of unsealing method.

[0005] Conventional technology discloses a method of increasing hermeticity in the electromagnetic relay in which the conventional sealing resin 5 is replaced with a new sealing resin 5 having high heat-resistance and a bonding characteristic being higher than those of the conventional molded resin cover 1 and molded resin base 4 as shown in Figs. 6A and 6B.

[0006] To solve the above problems, conventional technology is disclosed in Patent Reference 1 (Japanese Patent Application Laid-open No. Hei 5-242784) in which a filter having tiny and porous air holes is used. Another similar technology is disclosed in Patent Reference 2 (Japanese Patent Application Laid-open No. Hei 11-145667) in which polymerized monomers are applied which form air holes by adding radiation of an electromagnetic wave, ultraviolet rays, or a like.

[0007] The above-disclosed technology to increase heat-resistance and/or bonding characteristic of the sealing resin 5 are not sufficient to provide methods of improving bonding strength that can satisfy all conditions for diverse reflow heating. There is a limit point at which pressure inside the electromagnetic relay becomes high due to a high temperature and hermeticity failure occurs due to excessive thermal expansion. Therefore, cases are assumed where any one of the diverse conditions for the reflow heating exceeds the limit point at which hermeticity failure occurs. Moreover, the sealing resin 5 is vulnerable to changes by a coating condition, thermosetting condition, circumferential conditions such as an ambient temperature, humidity or a like and, therefore, its bonding characteristic is easy to change and it is impossible to keep its bonding strength constant in the manufacturing processes. As a result, the limit point causing the hermeticity failure changes.

[0008] Each of the technology to apply porous filters (the Patent Reference 1) and the technology to apply polymerized monomers to form air holes has problems (Patent Reference 2) in that it is difficult to establish the method of the applications. Moreover, the heat stress in the reflow heating causes it difficult to keep the air holes constantly porous. Additionally, new problems of an in-

crease of component counts, increased costs caused by the increase of component counts, and increased number of man-hours arise.

[0009] US-A-4 427 863 discloses an electromagnetic relay comprising: a main body comprising an electrical contact portion, an electromagnetic driving portion, and a molded resin base for mounting the electrical contact portion and the electromagnetic driving portion, wherein the main body is covered with a molded resin cover and is sealed with a sealing resin, wherein one or more through-holes are formed by applying a laser beam to desired positions from an inner surface side thereof so that the through-holes each are within a size range in which no invasion of water from the outside to the inner side occurs and wherein air permeability of the molded resin base can be maintained through the through-holes.

SUMMARY OF THE INVENTION

[0010] In view of the above, it is an object of the present invention to provide an electromagnetic relay which is capable of preventing an operational failure and a contacting failure at contact portions by maintaining air permeability and resistance to water (water invasion preventing property) even after being heated at a high temperature and by avoiding invasion of a coating agent. That is, the object of the present invention is to provide the electromagnetic relay which enables application of the coating agent even after being mounted on printed circuit boards having undergone reflow heating and water cleaning without causing an increase in component counts while maintaining air permeability and preventing the invasion of water.

[0011] This object is achieved by an electromagnetic relay as defined in claims 1, 3, 5 and 7, respectively; the dependent claims are related to further developments of the invention.

[0012] With the above configuration, it is made possible to provide the electromagnetic relay having both air permeability and resistance to water, which enables the coating process with the coating agent even after being mounted on the printed circuit board having undergone reflow heating and also which enables a water-cleaning process, thereby eliminating an operational failure and contacting failure at contact portions. That is, the electromagnetic relay of the present invention has a method of forming stable air ventilating openings (air holes) on the molded resin even after being heated at high temperature, which ensures only high air permeability and resistance to water (water invasion preventing property) of the electromagnetic relay. The size of each of the air ventilating openings is fine and its shape and dimension can be fully controlled and, as a result, it is possible to achieve high resistance to water while controlling air permeability. Additionally, it is made possible to avoid invasion of the coating agent, thereby preventing the operational failure and contacting failure at contact portions.

BRIEF DESCRIPTION OF THE DRAWINGS

[0013] The above and other objects, advantages, and features of the present invention will be more apparent from the following description taken in conjunction with the accompanying drawings in which:

Figs. 1A and 1B are diagrams showing an electromagnetic relay according to a first embodiment of the present invention, and Fig. 1A is a perspective view of a molded resin cover with an aperture portion faced upward and Fig. 1B is an expanded diagram showing portions where laser beam irradiation was performed;

Fig. 2 is a graph illustrating a relation between a diameter ∅A of a laser-beam irradiated portion and a diameter ∅B of a laser beam passing-through portion;

Figs. 3A and 3B are diagrams illustrating an electromagnetic relay according to a second embodiment of the present invention, and Fig. 3A is a perspective view of a molded resin base on which a main body of the electromagnetic relay is mounted and Fig. 3B is an expanded perspective view of a portion in which laser beam was applied;

Fig. 4 is an expanded sectional view of a molded resin cover applied to an electromagnetic relay according to a third embodiment;

Fig. 5 is a cross-sectional view showing a relation between the diameter ø A of a laser-beam irradiated portion and the diameter ∅B of a laser beam passing-through portion according to the first embodiment;

Figs. 6A and 6B are perspective views showing a conventional electromagnetic relay, and Fig. 6A is an exploded perspective view of the conventional electromagnetic relay and Fig. 6B is a partially cutaway perspective view showing the conventional electromagnetic relay; and

Figs. 7A and 7B are cross-sectional views explaining a conventional structure of a molded resin cover of Figs. 6A and 6B, and Fig. 7A is a vertical sectional view of a conventional unsealed- type of a through hole and Fig. 7B is a vertical sectional view of a conventional sealed-type through-hole.

DETAILED DESCRIPTION OF THE PREFERRED EMBODIMENTS

[0014] Best modes of carrying out the present invention will be described in further detail using various embodiments with reference to the accompanying drawings. According to embodiments of the present invention, when air ventilating openings are formed by laser beam irradiation, a diameter of each air ventilating opening falls within a range of 0.1μm to 10μm. The diameter of each air ventilating opening is a size of an exit portion through which laser beam passes on a surface of a molded resin

making up the electromagnetic relay. The size of the laser-beam irradiating portion is changed to calibrate a diameter of the exit portion that allows laser beam to pass through. The size of each hole of 0.1μm to 10μm is a size range in which no invasion of water into an inside of the electromagnetic relay occurs and in which air permeability can be maintained when water is in contact with the surface of the molded resin and when a water contact angle to the molded resin to be used for the electromagnetic relays is taken into consideration in general. Moreover, resistance to water can be adjusted within the above size range.

[0015] Any one of excimer laser, CO_2 laser, or YAG laser may be applied to the above processing. In some cases, a through-hole cannot be formed by one-time laser beam irradiation depending on a thickness of the molded resin. In this case, the through-hole can be formed by applying laser beam a plurality of times to the same spot.

First Embodiment

[0016] Figures 1A and 1B are diagrams showing an electromagnetic relay according to a first embodiment of the present invention and Fig. 1A is a perspective view of a molded resin cover 1 with its aperture portion faced upward and Fig. 1B is an expanded diagram showing portions 6 (6a, 6b) where laser-beam irradiation was performed. In the first embodiment, laser beam is applied surely from an inside of the molded resin cover 1, that is, from a face being opposite to a main body of the electromagnetic relay. Such a technology of applying laser beam is provided by, for example, Shinozaki Manufacturing Co., Ltd (Japan). In an example of forming a shape like this, a relation of a diameter ∅A of the laser-beam irradiated portion 6a and a diameter ∅ B of the laser-beam irradiated portion 6b is shown by an equation $ØA-2\sin\theta \cdot t=ØB$. Figure 5 is a cross-sectional view showing a relation between the diameter ∅A of the laser beam irradiated portion (laser beam coming-in side) and the diameter ∅B of the laser beam passing-through portion (laser beam going-out side) . In the above equation, "t" denotes a thickness of molded resin and "θ" denotes an angle related to focusing of the laser beam. In the case of CO_2 laser, θ=7° to 10°. Figure 2 is a graph showing a relation between the diameter ∅A of the laser-beam irradiated portion 6a and the diameter ∅B of the laser beam passing-through portion 6b. The thickness "t" is set to be 100μm. Based on the relation described above, the size ∅B of the laser beam passing-through portion 6b is calibrated so as to be equal to an air ventilating opening size of 1μm to 10μm.

[0017] When a plurality of laser-beam irradiated portions each having a structure shown in Fig. 1B is to be formed, the laser-beam irradiated portions 6a are provided with pitches among central points of the irradiated portions each being longer than the diameter ∅A.

[0018] By carrying out the first embodiment as above, ventilation is obtained through minute air ventilating openings formed on a surface of the molded resin cover 1. The molded resin cover 1 of the embodiment employs uses, as its material, resins which have been generally used by known electromagnetic relays. These resins obtained after being molded have a large water contact angle and, therefore, have high resistance to water. Moreover, the employed molded resin cover 1 has high heat resistance and, as a result, even if a reflow heating process is performed under temperature conditions to be applied to lead-less soldering melting or a like, no change in shapes of the processed air ventilating openings occurs due to heat.

[0019] Furthermore, regarding a coating agent applicable to the embodiment, it is preferable to select a coating agent having surface wettability to the molded resin cover 1 being equal or less than that of water, that is, having a contact angle of the coating agent to the molded resin cover 1 exceeding a contact angle of water to the molded resin cover 1.

Second Embodiment

[0020] Figs. 3A and 3B are diagrams illustrating an electromagnetic relay according to a second embodiment of the present invention; and Fig. 3A is a perspective view of a molded resin base 4 on which a main body of the electromagnetic relay is mounted and of portions 7 in which laser beam was applied and Fig. 3B is an expanded perspective view of portions 7 in which laser beam was applied. In the first embodiment, laser beam is applied surely from an inside of a molded resin cover 1. Instead the configuration of the first embodiment, in the second embodiment, one or more through-holes are formed by applying laser beam to desired positions of the molded resin base 4 from an inner surface side thereof, the desired positions which are not covered with a sealing resin 5 on an outer surface side thereof.

[0021] When a plurality of laser-beam irradiated portions 7 (7a, 7b) each having a structure shown in Fig. 3B is to be formed, the laser-beam irradiated portions 7a are provided with pitches among central points of the laser-beam irradiated portions each being longer than the diameter ∅A.

[0022] By carrying out the second embodiment as shown in Figs. 3A and 3B, ventilation is obtained through minute air ventilating openings formed on a surface of the molded resin base 4. The molded resin base 4 of the embodiment employs, as its material, resins which have been generally used by known electromagnetic relays. These resins obtained after being molded have a large water contact angle, thus providing high resistance to water. Moreover, the employed molded resin base 4 has high heat resistance and, as a result, even if a reflow heating process is performed under temperature conditions to be applied to lead-less soldering melting or a like, no change in shapes of the processed air ventilating openings occurs due to heat.

[0023] Furthermore, regarding a coating agent applicable to the second embodiment shown in Figs. 3A and 3B, it is preferable to select a coating agent having surface wettability to the molded resin base 4 being equal or less than that of water, that is, having a contact angle of the coating agent to the molded resin base 4 exceeding a contact angle of water to the molded resin base 4.

Third Embodiment

[0024] Figure 4 is an expanded sectional view of a molded resin cover 1 made of a liquid crystal polymer 8 of the third embodiment which is applied to an electromagnetic relay shown in Figs. 6A and 6B. It is a characteristic of the liquid crystal polymer 8 that it becomes liquid crystal phase when being in a melted state. As shown in Fig. 4, the molded resin cover 1 is of a three-layered structure including a first skin layer 9 with identical orientation of the liquid crystal formed on a surface side, a second skin layer 9 with identical orientation of the liquid crystal formed on a rear side, and a core layer 10 with random orientation of the liquid crystal formed between the first and second skin layers 9. When air ventilating openings are formed by laser beam irradiation, laser beam is not allowed fully to pass through the liquid crystal polymer 8 and allowed to pass through only the first and second skin layers 9. The first and second skin layers 9 have identical orientation of the liquid crystal and ventilation is interrupted completely. The core layer 10 has air permeability due to its random orientation of the liquid crystal and also has a function as a filter.

[0025] When laser beam is applied to the skin layers 9, by taking the relation between a diameter ∅A of a laser-beam irradiated portion 6a and a diameter ∅B of a laser-beam irradiated portion 6b shown in the first embodiment into consideration, the diameters of laser-beam irradiated portions 11a and 12a are calibrated so that the hole size of each of laser beam passing-through portions 11b and 12b is 0.1μm to 10μm to form laser-beam applied portions 11 and 12. Moreover, the laser beam passing-through portions 11b and 12b formed respectively on a surface and a rear of the molded resin cover 1 are not allowed to face each other and their positions are shifted so that the distances for ventilation in the core layer 10 serving as a filter can be secured at its maximum.

[0026] Thus, in the third embodiment in Fig. 4, ventilation is obtained by the minute air ventilating openings formed on the surface and rear of the molded resin cover 1 made of the liquid crystal polymer 8 and by the filtering function of the core layer 10 serving the intermediate layer. Large water contact angle of the liquid crystal polymer 8 maintains high resistance to water. Moreover, the liquid crystal polymer 8 has high heat-resistance enough to undergo lead-less soldering melting or a like, and no change in shapes of the processed air ventilating openings occurs due to heat.

[0027] Also, in the third embodiment shown in Fig. 4, since the core layer 10 existing in the intermediate position of each of the air ventilating openings functions as the filter, any coating agent can be used without limitation.

Fourth Embodiment

[0028] The fourth embodiment is described by using Fig. 4 applied in the third embodiment. That is, in the fourth embodiment, a liquid crystal polymer 8 is used as a material for a molded resin base 4 shown in Figs. 6A and 6B. Shapes of air ventilating openings passing through only skin layers by laser beam irradiation are the same as obtained in the third embodiment. Moreover, the molded resin base 4 is coated with a sealing resin 5 from its bottom (outer surface) and laser beams are applied to portions not covered with the sealing resin 5. An electromagnetic relay of the fourth embodiment is assembled using the molded resin base 4 obtained as above and, as a result, the same effect as achieved in the third embodiment is realized. The use of the electromagnetic relay enables improved reliability of automatic parts or electrical components in particular. Besides, in other industrial fields, the present invention can be applied to an electromagnetic relay for application to measuring instruments and apparatus, which improves the reliability of contacting functions of contacts.

[0029] It is apparent that the present invention is not limited to the above embodiments the invention being limited only by the scope of the appended claims.

Claims

1. An electromagnetic relay comprising: a main body (3) comprising an electrical contact portion, an electromagnetic driving portion, and a molded resin base (4) for mounting said electrical contact portion and, said electromagnetic driving portion,
wherein said main body (3) is covered with a molded resin cover (1) and is sealed with a sealing resin (5), and
wherein one or more through-holes (6) are formed by applying laser beam to desired positions of said molded resin cover (1) from an inner surface side (6a) thereof so that said through-holes (6) each are within a size range in which no invasion of water from an outer surface side (6b) of said molded resin cover (1) into the inner surface side (6a) thereof occurs and in which air permeability of said molded resin cover (1) can be maintained through said through-holes (6), **characterised in that** spot diameter as hole size on the outer surface side (6b) being smaller than that on the inner surface side (6a).

2. The electromagnetic relay according to claim 1, **characterized in that** said through-holes (6) each are set within the spot diameter of 0.1 cm to 10 μm on the outer surface side of said molded resin cover (1) as the size range.

3. An electromagnetic relay comprising: a main body (3) comprising an electrical contact portion, an electromagnetic driving portion, and a molded resin base (4) for mounting said electrical contact portion and said electromagnetic driving portion,
wherein said main body (3) is covered with a molded resin cover (1) and is sealed with a sealing resin (5), and
wherein one or more through-holes (7) are formed by applying laser beam to desired positions of said molded resin base (4) from an inner surface side (7a) thereof, the desired positions which are not covered with said sealing resin (5) on an outer surface side (7b) thereof so that said through-holes (7) each are within a size range in which no invasion of water from the outer surface side (7b) into the inner surface side (7a) thereof occurs and in which air permeability of said molded resin base (4) can be maintained through said through-holes (7), **characterised in that** spot diameter as hole size on the outer surface side (7b) being smaller than that on the inner surface side (7a).

4. The electromagnetic relay according to claim 3, **characterized in that** said through-holes (7) each are set within the spot diameter of 0.1 μm to 10 μm on the outer surface side of said molded resin base (4) as the size range.

5. An electromagnetic relay comprising: a main body (3) comprising an electrical contact portion, an electromagnetic driving portion, and a molded resin base (4) for mounting said electrical contact portion and said electromagnetic driving portion,
wherein said main body (3) is covered with a molded resin cover (1) and is sealed with a sealing resin (5), **characterised in**
that said molded resin cover (1) comprises a liquid crystal polymer (8) having skin layers (9) with identical orientation formed on both sides of a core layer (10) in an intermediate position between said skin layers (9),
that said core layer (10) has a random orientation of the liquid crystal polymer and has air permeability due to its random orientation of the liquid crystal polymer, and
that laser beams are applied to desired positions of said molded resin cover (1) from both inner and outer sides thereof so that the laser beam passes through only said skin layers (9) with said core layer (10) being left unprocessed by the laser beams to form one or more through-holes (11, 12) on each of said skin layers (9) which each are within a size range in which no invasion of water from the outer surface side into the inner surface side thereof occurs and in which air permeability of said molded resin cover (1) can be maintained through said through-holes (11, 12).

6. The electromagnetic relay according to claim 5, **characterized in that** said through-holes (11, 12) each are set within spot diameter of 0.1 μm to 10 μm on an outer surface side of said molded resin cover (1) as the size range.

7. An electromagnetic relay comprising a main body (3) comprising an electrical contact portion, an electromagnetic driving portion, and a molded resin base (4) for mounting said electrical contact portion and said electromagnetic driving portion,
wherein said main body (3) is covered with a molded resin cover (1) and is sealed with a sealing resin (5), **characterised in**
that said molded resin cover (1) comprises a liquid crystal polymer (8) having skin layers (9) with identical orientation formed on both sides of a core layer (9) in an intermediate position between said skin layers (9),
that said core layer (10) has a random orientation of the liquid crystal polymer and has air permeability due to its random orientation of the liquid crystal polymer, and
that laser beams are applied to desired positions of said molded resin base (4) from both inner and outer sides thereof, the desired positions which are not covered with said sealing resin (5) on an outer surface side thereof, so that the laser beams pass through only said skin layers (9) with said core layer (10) being left unprocessed by the laser beams to form one or more through-holes (11, 12) on each of said skin layers (9) which each are within a size range in which no invasion of water from the outer surface side into the inner surface side thereof occurs and in which air permeability of said molded resin base (4) can be maintained through said through-holes (11, 12).

8. The electromagnetic relay according to claim 7, the electromagnetic relay **characterized in that** said through-holes (11, 12) each are set within spot diameter of 0.1 μm to 10 μm on an outer surface side of said molded resin base (4) as the size range.

Patentansprüche

1. Elektromagnetisches Relais mit: einem Hauptkörper (3) mit einem elektrischen Verbindungsteil, einem elektromagnetischen Treiberteil und einer gegossenen Harzbasis (4) zum Montieren des elektrischen Kontaktteils und des elektromagnetischen Treiberteils,
wobei der Hauptkörper (3) mit einer gegossenen Harzabdeckung (1) abgedeckt ist und mit einem Dichtharz (5) abgedichtet ist und wobei ein oder mehrere Durchgangslöcher (6) durch Anwenden eines Laserstrahls an gewünschten Positionen der ge-

gossenen Harzabdeckung (1) von ihrer Innenflächenseite (6a) so ausgebildet sind, dass die Durchgangslöcher (6) jeweils innerhalb eines Größenbereiches sind, in dem kein Eintritt von Wasser von einer Außenflächenseite (6b) der gegossenen Harzabdeckung (1) in ihre Innenflächenseite (6a) auftritt und wobei Luftdurchlässigkeit der gegossenen Harzabdeckung (1) durch die Durchgangslöcher (6) aufrecht erhalten werden kann, **dadurch gekennzeichnet, dass** der Fleckendurchmesser als Lochgröße auf der Außenflächenseite (6b) kleiner ist als auf der Innenflächenseite (6a).

2. Elektromagnetisches Relais nach Anspruch 1, **dadurch gekennzeichnet, dass** jedes der Durchgangslöcher (6) innerhalb des Fleckendurchmessers von 0,1 μm bis 10 μm auf der Außenflächenseite der gegossenen Harzabdeckung (1) als Größenbereich eingestellt ist.

3. Elektromagnetisches Relais mit einem Hauptkörper (3) mit einem elektrischen Kontaktteil, einem elektromagnetischen Treiberteil und einer gegossenen Harzbasis (4) zum Montieren des elektrischen Kontaktteils und des elektromagnetischen Treiberteils, wobei der Hauptkörper (3) mit einer gegossenen Harzabdeckung (1) abgedeckt ist und mit einem Dichtharz (5) abgedichtet ist und wobei eines oder mehrere Durchgangslöcher (7) durch Anwenden eines Laserstrahls an gewünschten Positionen der gegossenen Harzbasis (4) von ihrer Innenflächenseite (7a) ausgebildet sind, wobei die gewünschten Positionen nicht mit dem Dichtharz (5) auf einer Außenflächenseite (7b) derart abgedeckt sind, dass die Durchgangslöcher (7) jeweils innerhalb eines Größenbereiches eingestellt sind, in dem kein Eintritt von Wasser von der Außenflächenseite (7b) in ihre Innenflächenseite (7a) auftritt und wobei Luftdurchlässigkeit der gegossenen Harzbasis (4) durch die Durchgangslöcher (7) aufrechterhalten werden kann, **dadurch gekennzeichnet, dass** der Flekkendurchmesser als Lochgröße auf der Außenflächenseite (7b) geringer ist als der auf der Innenflächenseite (7a).

4. Elektromagnetisches Relais nach Anspruch 3, **dadurch gekennzeichnet, dass** jedes der Durchgangslöcher (7) innerhalb des Fleckendurchmessers von 0,1 μm bis 10 μm auf der Außenflächenseite der gegossenen Harzbasis (4) als Größenbereich eingestellt ist.

5. Elektromagnetisches Relais mit: einem Hauptkörper (3) mit einem elektrischen Kontaktteil, einem elektromagnetischen Treiberteil und einer gegossenen Harzbasis (4) zum Montieren des elektrischen Kontaktteils und des elektromagnetischen Treiberteils, wobei der Hauptkörper (3) mit einer gegossenen Harzabdeckung (1) abgedeckt ist und mit einem Dichtharz (5) abgedichtet ist, **dadurch gekennzeichnet, dass** die gegossene Harzabdeckung (1) ein Flüssigkristallpolymer (8) mit einer Hautschicht (9) mit identischer Orientierung aufweist, die auf beiden Seiten einer Kernschicht (10) in einer Zwischenposition zwischen den Hautschichten (9) ausgebildet ist,
wobei die Kernschicht (10) eine statistische Orientierung des Flüssigkristallpolymers aufweist und aufgrund der statistischen Orientierung des Flüssigkristallpolymers Luftdurchlässigkeit aufweist, und
dass Laserstrahlen an gewünschten Positionen der gegossenen Harzabdeckung (1) von sowohl ihrer Innen- als auch ihrer Außenseite angewendet werden, so dass der Laserstrahl durch nur die Hautschichten (9) dringt, wobei die Kernschicht (10) durch den Laserstrahl unbearbeitet bleibt, um eines oder mehrere Durchgangslöcher (10, 12) auf jeder der Hautschichten (9) zu bilden, die jeweils innerhalb eines Größenbereiches liegen, in dem kein Eindringen von Wasser von ihrer Außenflächenseite zu ihrer Innenflächenseite auftritt, und wobei Luftdurchlässigkeit der gegossenen Harzabdeckung (1) durch die Durchgangslöcher (11, 12) aufrechterhalten werden kann.

6. Elektromagnetisches Relais nach Anspruch 5, **dadurch gekennzeichnet, dass** jedes Durchgangsloch (11, 12) innerhalb eines Fleckendurchmessers von 0,1 μm bis 10 μm an der Außenflächenseite der gegossenen Harzabdeckung (1) als Größenbereich ausgebildet ist.

7. Elektromagnetisches Relais mit einem Hauptkörper (3) mit einem elektrischen Kontaktteil, einem elektrischen Treiberteil und einer gegossenen Harzbasis (4) zum Montieren des elektrischen Kontaktteils und des elektromagnetischen Treiberteils, wobei der Hauptkörper (3) mit einer gegossenen Harzabdekkung (1) abgedeckt ist und mit einem Dichtharz (5) abgedichtet ist, **dadurch gekennzeichnet, dass** die gegossene Harzabdeckung (1) ein Flüssigkristallpolymer (8) mit Hautschichten (9) mit identischer Orientierung aufweist, die auf beiden Seiten einer Kernschicht (9) ausgebildet sind, die in einer Zwischenposition zwischen den Hautschichten (9) liegt, dass die Kernschicht (10) eine statistische Orientierung des Flüssigkristallpolymers aufweist und aufgrund ihrer statistischen Orientierung des Flüssigkristallpolymers Luftdurchlässigkeit aufweist und
dass Laserstrahlen in gewünschten Positionen der gegossenen Harzbasis (4) sowohl an ihrer Innen- als auch an ihrer Außenseite angewendet werden, wobei die gewünschten Positionen nicht mit dem Dichtharz (5) auf ihrer Außenflächenseite bedeckt sind, so dass die Laserstrahlen nur durch die Hautschichten (9) dringen, wobei die Kernschicht (10) durch die Laserstrahlen unbearbeitet bleibt, um ei-

nes oder mehrere Durchgangslöcher (11, 12) auf jeder der Hautschichten (9) zu bilden, die jeweils innerhalb eines Größenbereiches liegen, bei dem kein Eindringen von Wasser von ihrer Außenflächenseite in ihre Innenflächenseite auftritt, und wobei Luftdurchlässigkeit der gegossenen Harzbasis (4) durch die Durchgangslöcher (11, 12) aufrechterhalten werden kann.

8. Elektromagnetisches Relais nach Anspruch 7, wobei das elektromagnetische Relais **dadurch gekennzeichnet ist, dass** die Durchgangslöcher (11, 12) jeweils innerhalb eines Fleckendurchmessers von 0,1 μm bis 10 μm an der Außenflächenseite der gegossenen Harzbasis (4) als Größenbereich eingestellt sind.

Revendications

1. Relais électromagnétique comprenant : un corps principal (3) comprenant une partie de contact électrique, une partie d'entraînement électromagnétique, et une base de résine moulée (4) pour monter ladite partie de contact électrique et ladite partie d'entraînement électromagnétique,
dans lequel ledit corps principal (3) est recouvert d'un couvercle de résine moulée (1) et est scellé avec une résine d'étanchéité (5), et
dans lequel un ou plusieurs trous traversants (6) sont formés en appliquant un faisceau laser à des positions souhaitées dudit couvercle de résine moulée (1) depuis un côté de surface intérieure (6a) de celui-ci de sorte que chacun desdits trous traversants (6) présente une plage de dimensions dans laquelle aucune pénétration d'eau d'un côté de surface extérieure (6b) dudit couvercle de résine moulée (1) dans le côté de surface intérieure (6a) de celui-ci ne se produit et dans laquelle la perméabilité à l'air dudit couvercle de résine moulée (1) peut être maintenue à travers lesdits trous traversants (6), **caractérisé en ce que** le diamètre ponctuel en tant que taille de trou sur le côté de surface extérieure (6b) est inférieur à celui sur le côté de surface intérieure (6a).

2. Relais électromagnétique selon la revendication 1, **caractérisé en ce que** lesdits trous traversants (6) sont chacun réglés au diamètre ponctuel de 0,1 μm à 10 μm sur le côté de surface extérieure dudit couvercle de résine moulée (1) en tant que plage de taille.

3. Relais électromagnétique comprenant : un corps principal (3) comprenant une partie de contact électrique, une partie d'entraînement électromagnétique, et une base de résine moulée (4) pour monter ladite partie de contact électrique et ladite partie d'entraînement électromagnétique,
dans lequel ledit corps principal (3) est recouvert d'un couvercle de résine moulée (1) et est scellé avec une résine d'étanchéité (5), et
dans lequel un ou plusieurs trous traversants (7) sont formés en appliquant un faisceau laser à des positions souhaitées de ladite base de résine moulée (4) depuis un côté de surface intérieure (7a) de celui-ci, les positions souhaitées ne sont pas recouvertes de ladite résine d'étanchéité (5) sur un côté de surface extérieure (7b) de celui-ci de sorte que chacun desdits trous traversants (7) se présente une plage de dimensions dans laquelle aucune pénétration d'eau du côté de surface extérieure (7b) dans le côté de surface intérieure (7a) de celui-ci ne se produit et dans laquelle la perméabilité à l'air de ladite base de résine moulée (4) peut être maintenue à travers lesdits trous traversants (7), **caractérisé en ce que** le diamètre ponctuel en tant que taille de trou sur le côté de surface extérieure (7b) est inférieur à celui sur le côté de surface intérieure (7a).

4. Relais électromagnétique selon la revendication 3, **caractérisé en ce que** lesdits trous traversants (7) sont chacun réglés au diamètre ponctuel de 0,1 μm à 10 μm sur le côté de surface extérieure de ladite base de résine moulée (4) en tant que plage de taille.

5. Relais électromagnétique comprenant : un corps principal (3) comprenant une partie de contact électrique, une partie d'entraînement électromagnétique, et une base de résine moulée (4) pour monter ladite partie de contact électrique et ladite partie d'entraînement électromagnétique,
dans lequel ledit corps principal (3) est recouvert d'un couvercle de résine moulée (1) et est scellé avec une résine d'étanchéité (5), **caractérisé en ce que**
ledit couvercle de résine moulée (1) comprend un polymère de cristal liquide (8) ayant des couches de texture (9) avec une orientation identique formées des deux côtés d'une couche de coeur (10) à une position intermédiaire entre lesdites couches de texture (9),
ladite couche de coeur (10) a une orientation aléatoire du polymère de cristal liquide et a une perméabilité à l'air en raison de son orientation aléatoire du polymère de cristal liquide, et
des faisceaux laser sont appliqués à des positions souhaitées dudit couvercle de résine moulée (1) à partir des côtés intérieur et extérieur de celui-ci de sorte que le faisceau laser traverse uniquement lesdites couches de texture (9) avec ladite couche de coeur (10) qui n'est pas traitée par les faisceaux laser pour former un ou plusieurs trous traversants (11, 12) sur chacune desdites couches de texture (9) qui présentent chacun une plage de dimensions dans laquelle aucune pénétration d'eau du côté de surface extérieure dans le côté de surface intérieure de celui-

ci ne se produit et dans laquelle la perméabilité à l'air dudit couvercle de résine moulée (1) peut être maintenue à travers lesdits trous traversants (11, 12).

6. Relais électromagnétique selon la revendication 5, **caractérisé en ce que** lesdits trous traversants (11, 12) sont chacun réglés au diamètre ponctuel de 0,1 μm à 10 μm sur un côté de surface extérieure dudit couvercle de résine moulée (1) en tant que plage de taille.

7. Relais électromagnétique comprenant : un corps principal (3) comprenant une partie de contact électrique, une partie d'entraînement électromagnétique, et une base de résine moulée (4) pour monter ladite partie de contact électrique et ladite partie d'entraînement électromagnétique,
dans lequel ledit corps principal (3) est recouvert d'un couvercle de résine moulée (1) et est scellé avec une résine d'étanchéité (5), **caractérisé en ce que**
ledit couvercle de résine moulée (1) comprend un polymère de cristal liquide (8) ayant des couches de texture (9) avec une orientation identique formées des deux côtés d'une couche de coeur (10) à une position intermédiaire entre lesdites couches de texture (9),
ladite couche de coeur (10) a une orientation aléatoire du polymère de cristal liquide et a une perméabilité à l'air en raison de son orientation aléatoire du polymère de cristal liquide, et
des faisceaux laser sont appliqués à des positions souhaitées de ladite base de résine moulée (4) à partir des côtés intérieur et extérieur de celui-ci, les positions souhaitées ne sont pas recouvertes de ladite résine d'étanchéité (5) sur un côté de surface extérieure de celui-ci, de sorte que les faisceaux laser traversent uniquement lesdites couches de texture (9) avec ladite couche de coeur (10) qui n'est pas traitée par les faisceaux laser pour former un ou plusieurs trous traversants (11, 12) sur chacune desdites couches de texture (9) qui présentent chacun une plage de dimensions dans laquelle aucune pénétration d'eau du côté de surface extérieure dans le côté de surface intérieure de celui-ci ne se produit et dans laquelle la perméabilité à l'air de ladite base de résine moulée (4) peut être maintenue à travers lesdits trous traversants (11, 12).

8. Relais électromagnétique selon la revendication 7, **caractérisé en ce que** lesdits trous traversants (11, 12) sont chacun réglés au diamètre ponctuel de 0,1 μm à 10 μm sur un côté de surface extérieure de ladite base de résine moulée (4) en tant que plage de taille.

FIG.1

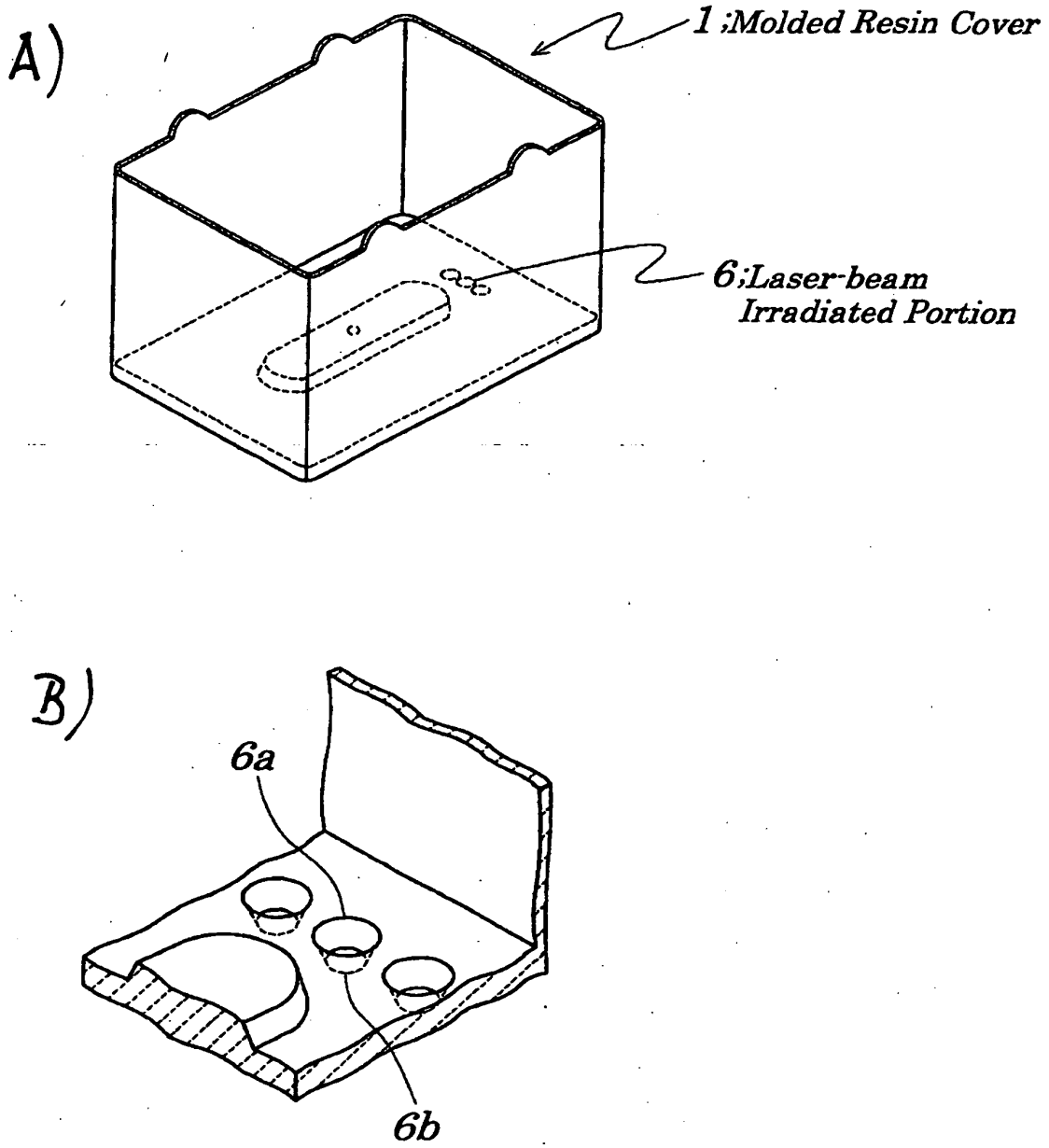
A)
1 ;Molded Resin Cover
6;Laser-beam
Irradiated Portion
B)
6a
6b

FIG.2

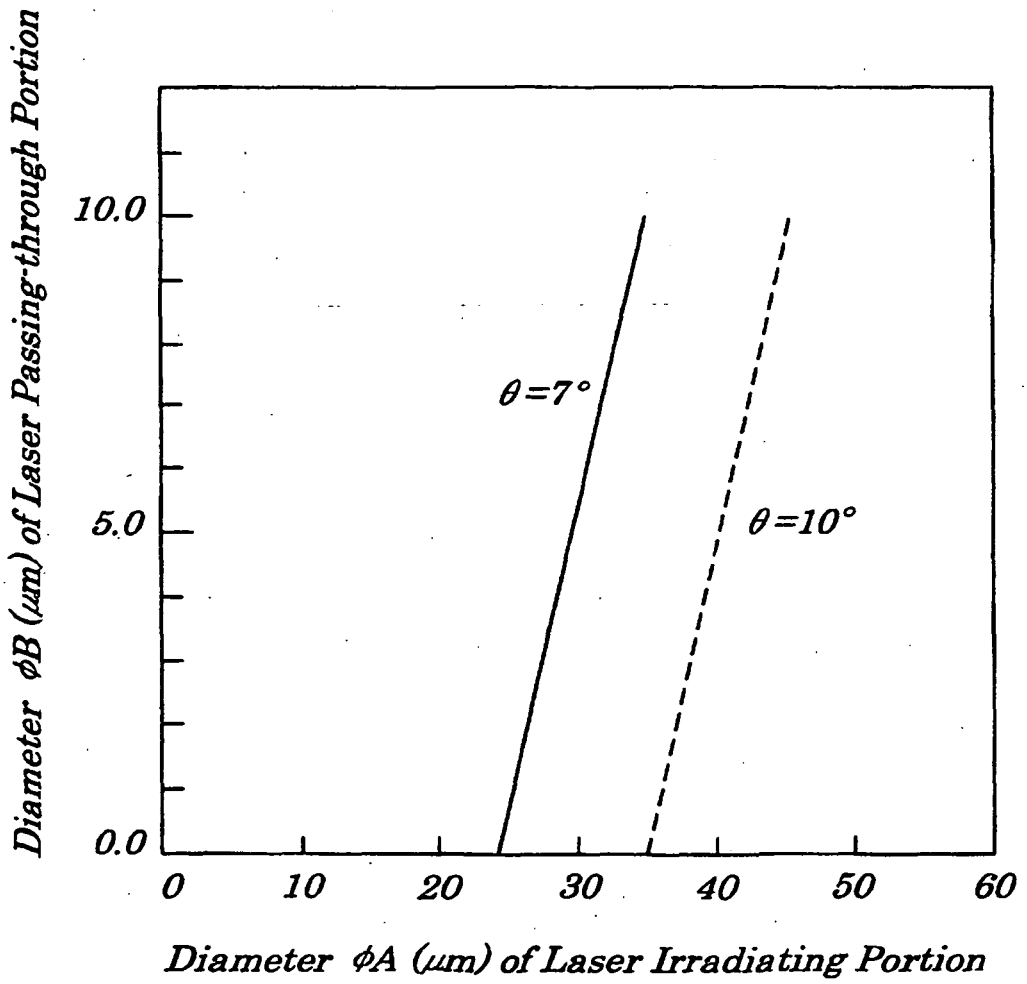
Diameter φB (μm) of Laser Passing-through Portion
10.0
5.0
0.0
θ=7°
θ=10°
0
10
20
30
40
50
60
Diameter φA (μm) of Laser Irradiating Portion

FIG.3A

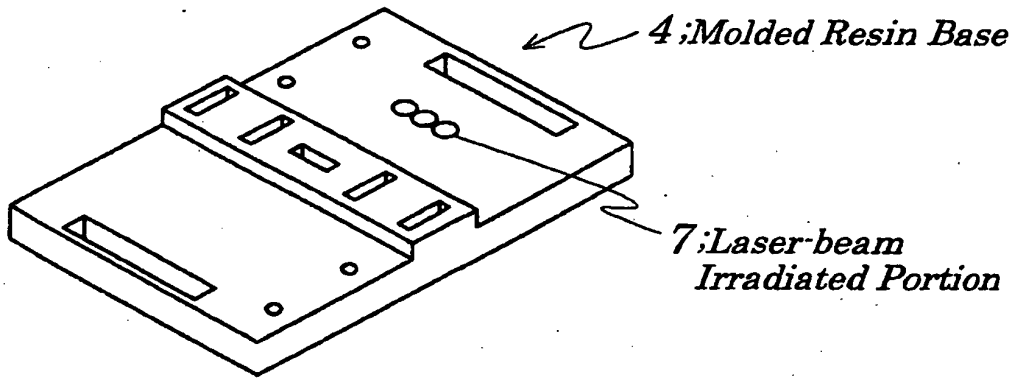

FIG.3B

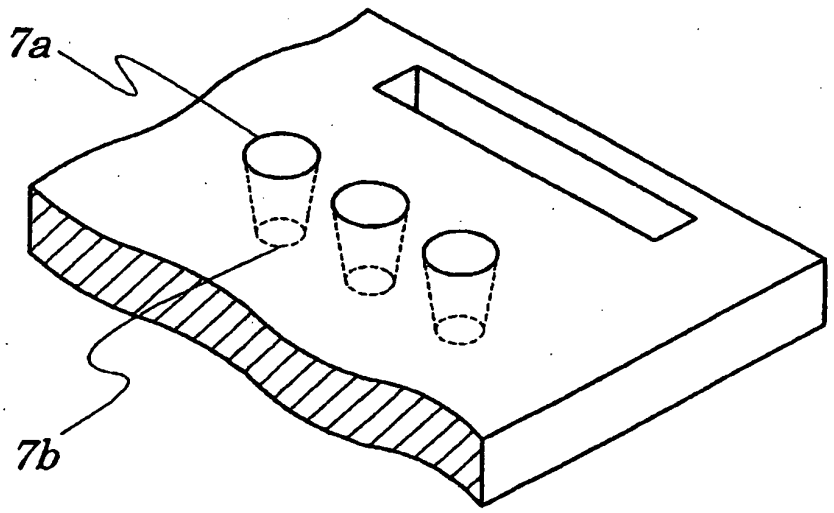

FIG.4

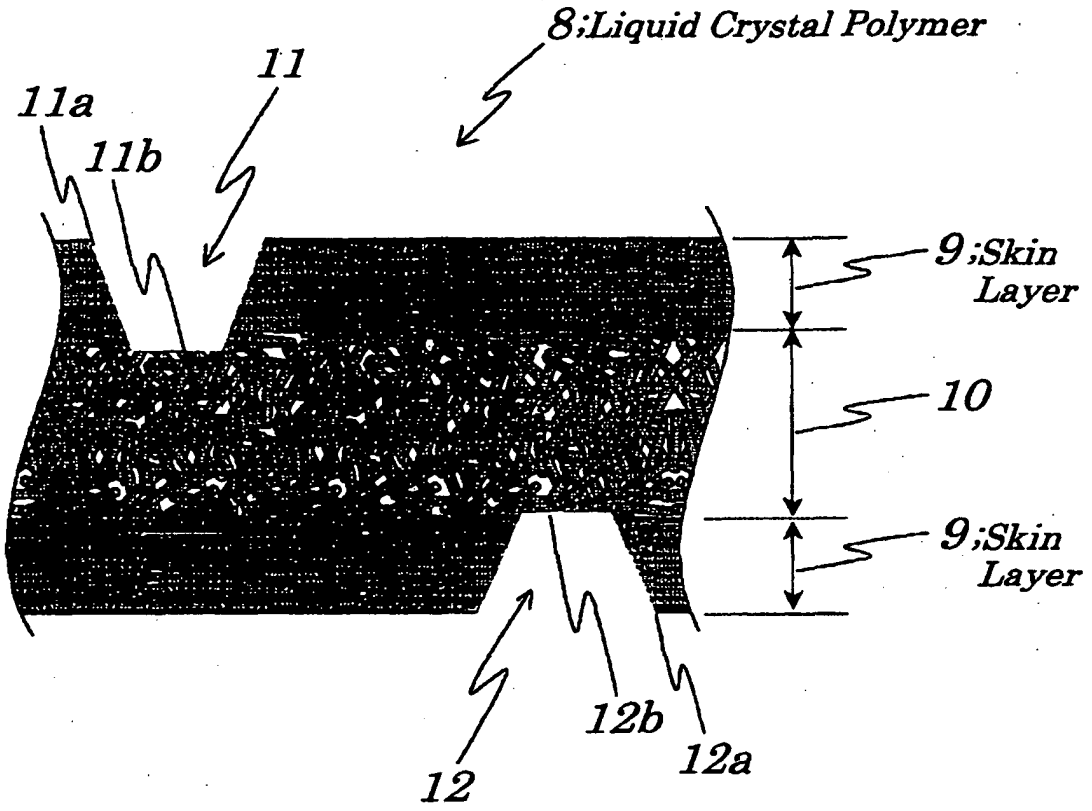
8;Liquid Crystal Polymer
11
11a
11b
9;Skin Layer
10
9;Skin Layer
12b
12a
12

FIG.5

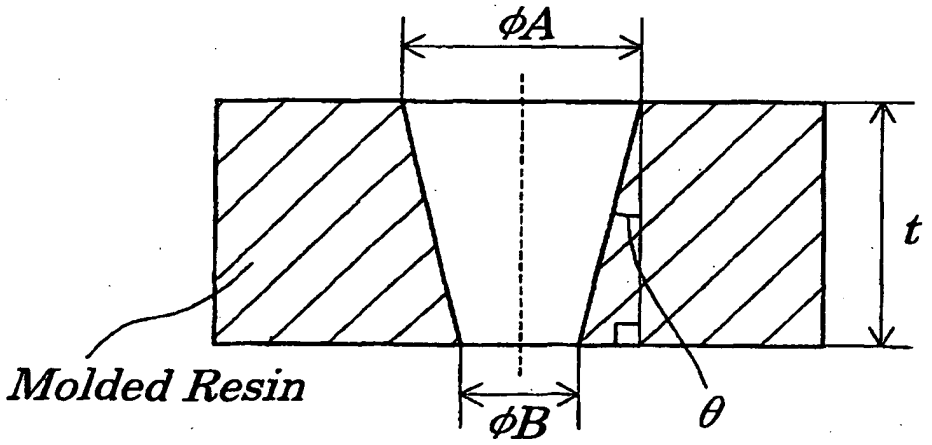
ϕA
t
Molded Resin
ϕB
θ

FIG.6A (RELATED ART)

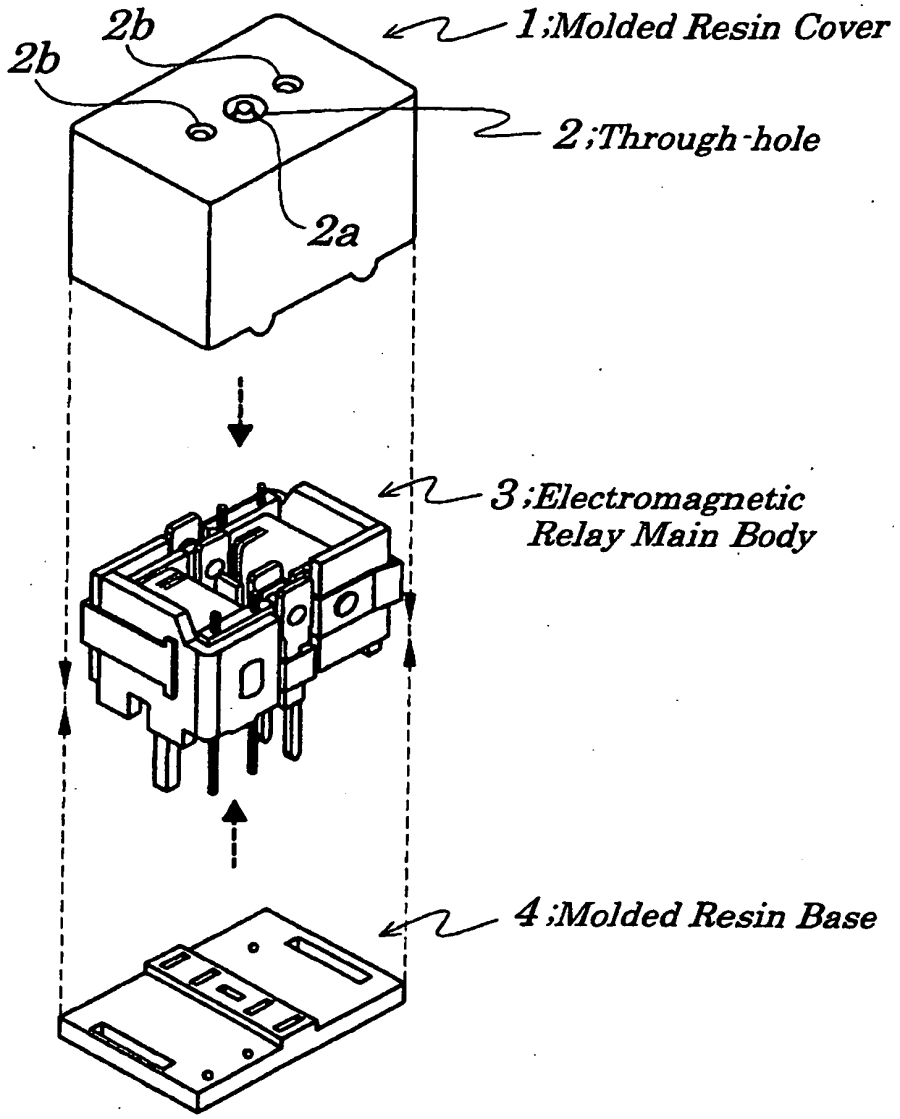

FIG.6B (RELATED ART)

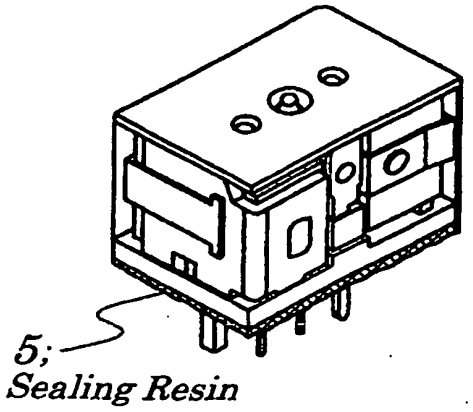

FIG. 7A (RELATED ART)

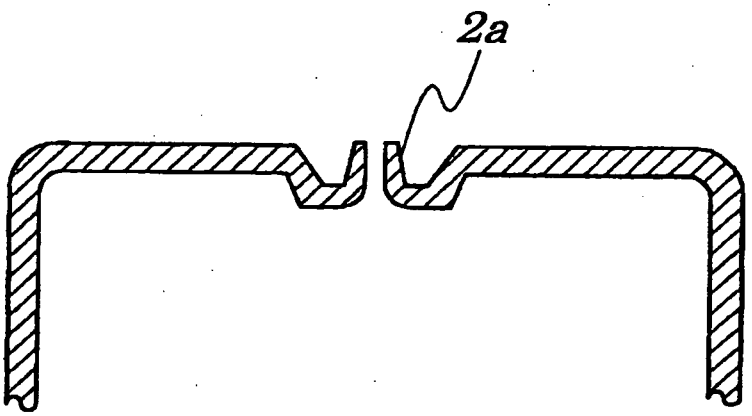

FIG. 7B (RELATED ART)

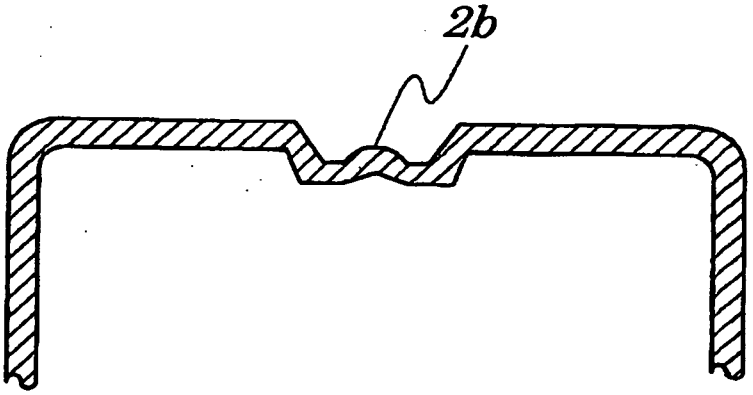

REFERENCES CITED IN THE DESCRIPTION

This list of references cited by the applicant is for the reader's convenience only. It does not form part of the European patent document. Even though great care has been taken in compiling the references, errors or omissions cannot be excluded and the EPO disclaims all liability in this regard.

Patent documents cited in the description

- JP 5242784 A **[0006]**
- JP 11145667 A **[0006]**
- US 4427863 A **[0009]**