(19) Europäisches Patentamt
European Patent Office
Office européen des brevets

(11) EP 2 233 301 A1

(12) EUROPEAN PATENT APPLICATION

(43) Date of publication:
29.09.2010 Bulletin 2010/39

(51) Int Cl.:
B41J 2/175 *(2006.01)*

(21) Application number: **10156492.0**

(22) Date of filing: **15.03.2010**

(84) Designated Contracting States:
AT BE BG CH CY CZ DE DK EE ES FI FR GB GR HR HU IE IS IT LI LT LU LV MC MK MT NL NO PL PT RO SE SI SK SM TR

(30) Priority: **27.03.2009 JP 2009080581**

(71) Applicant: **Brother Kogyo Kabushiki Kaisha**
Nagoya-shi, Aichi 467-8561 (JP)

(72) Inventors:
- **Kanbe, Tomohiro**
  Nagoya-shi Aichi 467-8562 (JP)
- **Nakamura, Hirotake**
  Nagoya-shi Aichi 467-8562 (JP)

(74) Representative: **Prüfer & Partner GbR**
European Patent Attorneys
Sohnckestraße 12
D-81479 München (DE)

(54) Image recording apparatus

(57) An image recording apparatus includes a cartridge mounting portion configured to support an ink cartridge in a predetermined mounted position. The image recording apparatus also includes a restricting member configured to restrict a movement of the ink cartridge by contacting the ink cartridge being in the mounted position, an urging member, and a sliding member configured to be urged by the urging member in the removal direction. The image recording apparatus further includes a detector configured to detect the sliding member, and a controller configured to perform a cartridge-mount-complete process when the controller determines that the sliding member is detected by the detector. The sliding member is shifted from a contact point between the restricting member and the ink cartridge in a direction perpendicular to a supporting surface of the cartridge mounting portion on which the ink cartridge is supported.

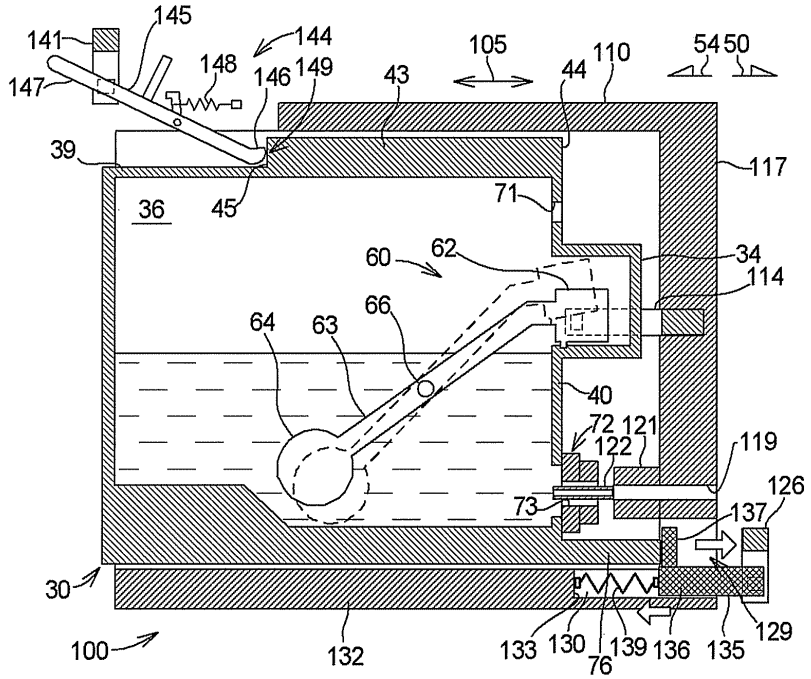

Fig.5B

EP 2 233 301 A1

Description

BACKGROUND OF THE INVENTION

1. Field of the Invention

[0001] The present invention relates to an image recording apparatus comprising a cartridge mounting portion configured to support an ink cartridge such that the ink cartridge is insertable into the cartridge mounting portion and removal from the cartridge mounting portion, and configured to supply ink to an outside of the cartridge mounting portion from the ink cartridge mounted to the cartridge mounting portion.

2. Description of Related Art

[0002] A known ink-jet recording apparatus is configured to record an image on a sheet of paper with ink. The recording apparatus has an ink-jet recording head. The recording head selectively ejects ink to the sheet of paper from nozzles formed in the recording head. Accordingly, the image is recorded on the sheet of paper. The recording apparatus has a mounting portion to which an ink cartridge is removably mounted. The ink cartridge is configured to be inserted into the mounting portion in an insertion direction and be removed from the mounting portion in a removal direction. The ink cartridge is mounted to the mounting portion by being inserted into the mounting portion, such that ink stored in the ink cartridge is allowed to be supplied to the recording head.

[0003] A known recording apparatus such as a recording apparatus described in JP-A-2008-246999 has an ink cartridge determination device. The ink cartridge determination device has two optical detectors in a cartridge mounting portion, and determines the type of the ink cartridge mounted to the cartridge mounting portion based on output signals supplied to the device from the respective optical detectors during an insertion of the ink cartridge into the cartridge mounting portion.

[0004] The cartridge mounting portion has a accommodation chamber having larger dimensions than external dimensions of the ink cartridge so as to allow the ink cartridge to be accommodated therein. Therefore, when the ink cartridge is mounted to the cartridge mounting portion, there is some clearance between the ink cartridge and a wall surface of the accommodation chamber. The cartridge mounting portion also has a lock lever configured to lock the ink cartridge by contacting a contact portion of the ink cartridge. The ink cartridge is locked by the lock lever in the cartridge mounting portion so as not to move in the removal direction. During an insertion of the ink cartridge into the mounting portion, the contact portion passes the lock lever in the insertion direction, such that there is some clearance between the lock lever and the contact portion of the ink cartridge. Subsequently, the ink cartridge is pushed back in the removal direction by an urging member, such that the lock lever contacts the contact portion of the ink cartridge.

[0005] When the lock lever is configured to contact the contact portion of the ink cartridge at only one side of the ink cartridge to restrict the movement of the ink cartridge in the removal direction, the ink cartridge may rotate about a contact point between the lock lever and the contact portion of the ink cartridge. In particular, when the ink cartridge is urged in the removal direction by the urging member, even though the ink cartridge is locked, the ink cartridge is liable to rotate about the contact point, receiving an urging force from the urging member. When the ink cartridge rotates in the accommodation chamber, a mounted state of the ink cartridge is not stabilized. When ink is supplied from the ink cartridge in this unstable state, there may be problems that ink may not be supplied properly, ink may leak, an ink supply portion of the ink cartridge may be broken and, the recording head may be broken.

There also may be a problem that type determination of the ink cartridge may be performed erroneously because the detector may fail to detect a portion of the ink cartridge.

SUMMARY OF THE INVENTION

[0006] Therefore, a need has arisen for an image recording apparatus which overcomes these and other shortcomings of the related art. A technical advantage of the present invention is that chances that an ink cartridge is used in an unstable/abnormal mounted state in a cartridge mounting portion are reduced.

[0007] According to an embodiment of the present invention, an image recording apparatus comprises a cartridge mounting portion configured to support an ink cartridge such that the ink cartridge is insertable into the cartridge mounting portion in an insertion direction and removal from the cartridge mounting portion in a removal direction. The cartridge mounting portion is configured to supply ink to an outside of the cartridge mounting portion from the ink cartridge mounted to the cartridge mounting portion in a predetermined mounted position. The image recording apparatus also comprises a restricting member configured to restrict a movement of the ink cartridge in the removal direction by contacting the ink cartridge being in the mounted position, an urging member, and a sliding member configured to be urged by the urging member in the removal direction. The sliding member is configured to move in the insertion direction against an urging force of the urging member in association with an insertion of the ink cartridge into the cartridge mounting portion. The image recording apparatus further comprises a first detector configured to detect the sliding member, and a controller configured to perform a cartridge-mount-complete process when the controller determines that the sliding member is detected by the first detector. The sliding member is shifted from a contact point between the restricting member and the ink cartridge in a direction perpendicular to a supporting surface

of the cartridge mounting portion on which the ink cartridge is supported.

[0008] With this configuration, when the ink cartridge is mounted to the cartridge mounting portion in the mounted position, the restricting member contacts the ink cartridge. Accordingly, a frictional force generated between the restricting member and the ink cartridge or a reaction force from the restricting member restricts the ink cartridge from moving in the removal direction. The ink cartridge is urged by the urging member via the sliding member in the removal direction in the mounted position. Because the sliding member is shifted from the contact point between the restricting member and the ink cartridge in the direction perpendicular to the supporting surface, the ink cartridge is caused to rotate about the contact point upon receipt of the urging force. When the ink cartridge rotates relative to the cartridge mounting portion, the ink cartridge may be mounted in an unstable/abnormal state, which may cause a problem that ink may not be supplied properly.

[0009] In a case where the sliding member is detected by the first detector when the ink cartridge is in the mounted position, a mounted state of the ink cartridge in the cartridge mounting portion is determined to be satisfactory, so that the controller performs the cartridge-mount-complete process. In contrast, when the ink cartridge is rotated in the cartridge mounting portion and the first detector does not detect the sliding member, the controller does not perform the cartridge-mount-complete process. Therefore, the cartridge-mount-complete process may be prevented to be performed when the ink cartridge is in an unstable/abnormal mounted state. The cartridge-mount-complete-process is a process to be performed in an image recoding apparatus after the ink cartridge is mounted, and comprises at least one of an image recording process, a purging process (a process of sucking ink from the ink cartridge via a recording head of the image recording apparatus) performed for preventing defective discharge of ink from the recording head, a process of determining the remaining amount of ink in the ink cartridge and renewing information about the remaining amount displayed on a display, and a process of determining the type of the ink cartridge.

[0010] The sliding member may be movable in the insertion direction and the removal direction, and may be configured to move toward a detection area of the first detector when receiving a pressing force from the ink cartridge in association with the insertion of the ink cartridge into the cartridge mounting portion.

[0011] The restricting member may be positioned at a first side of the cartridge mounting portion, and the sliding member may be positioned at a second side of the cartridge mounting portion opposite from the first side in the direction perpendicular to the supporting surface.

[0012] With this configuration, the ink cartridge mounted to the cartridge mounting portion may readily be rotated when receiving the urging force from the urging member. Nevertheless, the cartridge-mount-complete process may be prevented to be performed when the ink cartridge is in an unstable/abnormal mounted state because of the rotation.

[0013] The ink cartridge may comprise a pressing portion configured to press the sliding member during the insertion of the ink cartridge into the cartridge mounting portion, and a front wall surface facing forward in the insertion direction during the insertion of the ink cartridge into the cartridge mounting portion, wherein the pressing portion projects in the insertion direction from the front wall surface.

[0014] With this configuration, the sliding member may readily be pressed.

If the pressing portion has sufficient rigidity, a front portion of the ink cartridge may be protected by the pressing portion even when the ink cartridge is dropped onto a floor surface.

[0015] The image recording apparatus further may comprise a second detector. The ink cartridge may comprise a detection portion positioned closer to the contact point than to the sliding member in the direction perpendicular to the supporting surface when the ink cartridge is in the mounted position, and the second detector may be configured to detect the detection portion when the ink cartridge is in the mounted position. The controller may be configured to perform the cartridge-mount-complete process when the controller determines that the sliding member is detected by the first detector and the detection portion is detected by the second detector.

[0016] With this configuration, based on the detection of both the first detector and the second detector, the cartridge-mount-complete process may be prevented to be performed when the ink cartridge is in an unstable/abnormal mounted state.

[0017] The ink cartridge may comprise a front wall surface facing forward in the insertion direction during the insertion of the ink cartridge into the cartridge mounting portion, and an ink supply portion positioned at the first wall and configured to supply ink from an interior of the ink cartridge to an exterior of the ink cartridge, wherein the ink supply portion is positioned closer to the sliding member than to the contact point.

[0018] With this configuration, if the ink cartridge is rotated about the contact point when the movement of the ink cartridge is restricted by the restricting member, the amount of rotational movement of the ink supply portion is relatively large, and hence the ink supply portion may not be connected to a portion of the cartridge mounting portion. The cartridge-mount-complete process may be prevented to be performed when the ink supply portion is in such a state.

[0019] According to another embodiment of the present invention, an image recording apparatus comprises a cartridge mounting portion configured to support an ink cartridge such that the ink cartridge is insertable into the cartridge mounting portion in an insertion direction and removal from the cartridge mounting portion in a removal direction. The cartridge mounting portion is

configured to supply ink to an outside of the cartridge mounting portion from the ink cartridge mounted to the cartridge mounting portion in a predetermined mounted position. The image recording apparatus also comprises an urging member configured to urge the ink cartridge in the removal direction, a restricting member configured to restrict a movement of the ink cartridge in the removal direction by contacting the ink cartridge being in the mounted position, a detector configured to detect a detection portion of the ink cartridge when the ink cartridge is in the mounted position, and a controller configured to perform a cartridge-mount-complete process when the controller determines that the detection portion is detected by the detector. The detection portion may be shifted from a contact point between the restricting member and the ink cartridge in a direction perpendicular to a supporting surface of the cartridge mounting portion on which the ink cartridge is supported.

[0020] The restricting member may be positioned at a first side of the cartridge mounting portion, and the detection portion may be positioned adjacent to a second side of the cartridge mounting portion opposite from the first side in the direction perpendicular to the supporting surface.

[0021] With this configuration, the ink cartridge mounted to the cartridge mounting portion may readily be rotated when receiving an urging force from the urging member.

[0022] The image recording apparatus further may comprise a second detector. The ink cartridge may comprise a second detection portion positioned closer to the contact point than to the detection portion in the direction perpendicular to the supporting surface when the ink cartridge is in the mounted position, and the second detector may be configured to detect the second detection portion when the ink cartridge is in the mounted position. The controller may be configured to perform the cartridge-mount-complete process when the controller determines that the detection portion is detected by the detector and the second detection portion is detected by the second detector.

[0023] With this configuration, based on detection of both the detector and the second detector, the cartridge-mount-complete process may be prevented to be performed when the ink cartridge is in an unstable/abnormal mounted state.

[0024] The ink cartridge may comprise a front wall surface facing forward in the insertion direction during the insertion of the ink cartridge into the cartridge mounting portion, and at least one of the detection portion and the second detection portion projects in the insertion direction from the front wall surface.

[0025] With this configuration, even when the ink cartridge is dropped, a front portion of the ink cartridge may be protected by at least one of the detection portion and the second detection portion.

[0026] The ink cartridge may comprise an ink supply portion positioned at the front wall surface and configured to supply ink from an interior of the ink cartridge to an exterior of the ink cartridge, and the ink supply portion may be positioned closer to the detection portion than to the contact point.

[0027] With this configuration, even when the ink cartridge is dropped, the ink supply portion may be protected by the detection portion. If the ink cartridge is rotated about the contact point when the movement of the ink cartridge is restricted by the restricting member, the amount of rotational movement of the ink supply portion is relatively large, and hence the ink supply portion may not be connected to a portion of the cartridge mounting portion. The cartridge-mount-complete process may be prevented to be performed when the ink supply portion is in such a state.

[0028] At least one of the detection portion and the second detection portion may project further than the ink supply portion in the insertion direction.

[0029] The ink supply portion may be positioned between the detection portion and the second detection portion.

[0030] Each detector may comprise a light-receiving portion configured to receive light, a light-emitting portion configured to emit light toward the light-receiving portion, and a detection area extending between the light-emitting portion and the light-receiving portion.

[0031] The cartridge mounting portion may be configured to support the ink cartridge, such that the ink cartridge can move in a horizontal direction. The ink cartridge may have a width in a width direction, a height in a height direction, and a depth in a depth direction. The width direction, the height direction, and the depth direction may be perpendicular to each other, and the width may be less than each of the height and the depth. When the ink cartridge is in the mounted position, the depth direction may be parallel to the insertion direction and the removal direction, the width direction may be perpendicular to the insertion direction and the removal direction and perpendicular to the direction perpendicular to the supporting surface, and the height may be perpendicular to the insertion direction and the removal direction and parallel to the direction perpendicular to the supporting surface. The restricting member may be configured to restrict the movement of the ink cartridge in the removal direction by contacting an end portion positioned at an upper portion of the ink cartridge.

[0032] Other objects, features, and advantages will be apparent to persons of ordinary skill in the art from the following detailed description of the invention and the accompanying drawings.

BRIEF DESCRIPTION OF THE DRAWINGS

[0033] For a more complete understanding of the present invention, needs satisfied thereby, and the objects, features, and advantages thereof, reference now is made to the following description taken in connection with the accompanying drawing.

[0034] Fig. 1 is a schematic cross-sectional view of an internal structure of a printer according to an embodiment of the present invention.

[0035] Fig. 2(A) is a perspective view of an ink cartridge according to an embodiment of the present invention, and Fig. 2(B) is a vertical cross-sectional view of the ink cartridge.

[0036] Figs. 3(A) and 3(B) are vertical cross-sectional views of a cartridge holder according to an embodiment of the present invention, in which a lock lever is in a lock position in Fig. 3(A) and in an unlock position in Fig. 3(B).

[0037] Fig. 4(A) is a vertical cross-sectional view of the ink cartridge of Figs. 2(A) and 2(B) and the cartridge holder of Figs. 3(A) and 3(B), in which the ink cartridge is inserted into the cartridge holder, and Fig. 4(B) is a vertical cross-sectional view of the ink cartridge and the cartridge holder, in which the ink cartridge is further inserted into the cartridge holder from the state shown in Fig. 4(A).

[0038] Fig. 5(A) is a vertical cross-sectional view of the ink cartridge and the cartridge holder, in which the ink cartridge is further inserted into the cartridge holder from the state shown in Fig. 4(B), and Fig. 5(B) is a vertical cross-sectional view of the ink cartridge and the cartridge holder, in which mounting of the ink cartridge to the cartridge holder is completed.

[0039] Fig. 6 is a vertical cross-sectional view of the ink cartridge and the cartridge holder, in which the ink cartridge is locked in an inclined state in the cartridge holder.

[0040] Fig. 7(A) shows time profiles of output signals from three optical detectors when the ink cartridge is in a normal mounted state, and Fig. 7(B) shows time profiles of output signals from three optical detectors when the ink cartridge is in an abnormal mounted state.

[0041] Fig. 8 is a block diagram of a controller.

[0042] Fig. 9 is a flowchart of a process performed by the controller.

[0043] Fig. 10(A) is a perspective view of an ink cartridge according to another embodiment of the present invention, and Fig. 10(B) is a vertical cross-sectional view of the ink cartridge.

[0044] Fig. 11 (A) is a vertical cross-sectional view of the ink cartridge of Figs. 10(A) and 10(B) and a cartridge holder according to another embodiment of the present invention, in which the ink cartridge is inserted into the cartridge holder, and Fig. 11 (B) is a vertical cross-sectional view of the ink cartridge and the cartridge holder, in which mounting of the ink cartridge to the cartridge holder is completed.

[0045] Fig. 12(A) is a vertical cross-sectional view of an ink cartridge and a cartridge holder according to yet another embodiment of the present invention, in which the ink cartridge is inserted into the cartridge holder, and Fig. 12(B) is a vertical cross-sectional view of the ink cartridge and the cartridge holder, in which mounting of the ink cartridge to the cartridge holder is completed.

DETAILED DESCRPITION OF EMBODIMENTS OF THE INVENTION

[0046] Embodiments of the present invention, and their features and advantages, may be understood by referring to Figs 1-12(B), like numerals being used for like corresponding parts in the various drawings.

[0047] A first embodiment of the present invention will be described. Referring to Fig. 1, a printer 10, as an example of an image recording apparatus, is an ink-jet printer configured to perform image recording on a recording medium such as a sheet of paper by selectively discharging inks in respective colors from a recording head 21 as minute ink droplets. The printer 10 comprises an ink supply device 100. The ink supply device 100 comprises a cartridge holder 110, as an example of a cartridge mounting portion, and four ink cartridges 30 configured to be removably mounted to the cartridge holder 110 by being inserted into the cartridge holder 110 in a horizontal direction. An opening 112 is formed through the cartridge holder 110. The ink cartridge 30 is inserted into the cartridge holder 110 via the opening 112 in an insertion direction 50 (See Fig. 2(A) and 2(B)) and removed from the cartridge holder 110 via the opening 112 in a removal direction 54 (See Fig. 2(A) and 2(B)).

[0048] In the respective ink cartridges 30, inks to be used by the printer 10 are stored. More specifically, inks in respective colors; cyan, magenta, yellow, and black are stored in the ink cartridges 30 corresponding to the respective colors. The ink cartridge 30 and the recording head 21 are in fluid communication by a flexible ink tube 20. The recording head 21 is provided with a sub tank 28, and ink is stored temporarily in the sub tank 28. The recording head 21 selectively ejects the ink in the sub tank 28 from nozzles 29.

[0049] A sheet of paper fed to a conveying path 24 from a feed tray 15 by a paper feed roller 23 is conveyed onto a platen 26 by a conveying roller pair 25. The recording head 21 ejects ink onto the sheet of paper passing over the platen 26. Accordingly, an image is recorded on the sheet of paper. The sheet of paper having passed over the platen 26 is discharged to a discharge tray 16 provided at most downstream side of the conveying path 24 by a discharge roller pair 22. The cartridge-mount-complete process comprises a variety of processes performed by the printer 10 and the ink supply device 100 after the ink cartridge 30 is mounted to the cartridge holder 110, and comprises at least on of an image recording process in which an image is recorded with ink by the recording head 21, and a purging process in which ink is sucked from the recording head 21 (and sucked from the ink cartridge 30 accordingly) for preventing the defective ejection of the ink from the nozzles 29, a process of determining the remaining amount of ink in the ink cartridge 30 and renewing information about the remaining amount displayed on a display (if any), and a process of determining the type of the ink cartridge 30.

[0050] Referring to Figs. 2(A) and 2(B), the ink car-

tridge 30 has a container shape and is configured to store ink therein. The ink cartridge 30 comprises an ink chamber 36 formed therein. The ink cartridge 30 is inserted into the cartridge holder 110 in an upright position as shown in Fig. 2(A), in the insertion direction 50. The ink cartridge 30 is mounted to the cartridge holder 110 in the upright position.

[0051] The ink cartridge 30 has a substantially rectangular parallelepiped shape. The ink cartridge 30 has a flat shape, such that a width thereof in a width direction 51 is less than each of a height thereof in a height direction 52 and a depth thereof in a depth direction 53. The width direction 51, the height direction 52, and the depth direction 53 are perpendicular to each other. The ink cartridge 30 is made, for example, of a translucent resin, e.g., transparent or semi-transparent resin. The ink cartridge 30 comprises an air communication opening 71, an ink amount detection portion 34, and an ink supply portion 72 on a front side of the ink cartridge 30 with respect to the insertion direction 50. More specifically, the ink cartridge 30 comprises a front wall 40 facing forward with respect to the insertion direction 50. The front wall 40 comprises the air communication opening 71 formed therethrough, the ink amount detection portion 34, and the ink supply portion 72. An outer surface of the front wall 40 corresponds to a front wall surface of the present invention.

[0052] The ink amount detection portion 34 has a substantially rectangular parallelepiped shape. The ink amount detection portion 34 projects outward (forward, e.g., rightward in Fig. 2(B))) from a middle portion of the front wall 40 with respect to the height direction 52. The ink amount detection portion 34 has an inner space 35 formed therein, and the inner space 35 is in fluid communication with the ink chamber 36. The inner space 35 is defined by a bottom wall 34A, side walls 34B, an upper wall 34D, and a front wall 34E of the ink amount detection portion 34. A light-blocking panel 62 of a detection arm 60, described later, is inserted into the inner space 35.

[0053] A user can visually see the light-blocking panel 62 through the ink amount detection portion 34, or an optical detector 114 (see Figs. 3(A) and 3(B)) can detect light-blocking panel 62, such that the amount of ink in the ink chamber 36 is recognized. Therefore, the ink amount detection portion 34 is made of a translucent material, e.g., transparent or semi-transparent material. The distance between the side walls 34B in the width direction 51, i.e., the width of the ink amount detection portion 34 is less than the width of the front wall 40, such that the ink amount detection portion can enter a detection area 115 of the optical detector 114, described later.

[0054] The detection arm 60 is positioned in ink chamber 36. The detection arm 60 is configured to move according to the amount of ink stored in the ink chamber 36. The detection arm 60 comprises the light-bloclcing panel 62, an arm body 63, and a float 64.

[0055] The arm body 63 is pivotally supported by a supporting shaft 66 which is supported by side walls 41 of the ink cartridge 30. The supporting shaft 66 extends between the side walls 41. Accordingly, the detection arm 60 is pivotable in the ink chamber 36 in the directions indicated by an arrow 67 and an arrow 68.

[0056] The float 64 is provided at one end of the arm body 63. The float 64 has a hollow interior formed therein, and a predetermined buoyancy acts on the float 64 when the float 64 is submerged in ink. Therefore, the float 64 moves up and down according to increase and decrease of the amount of ink stored in the ink chamber 36. The detection arm 60 pivots according to the movement of the float 64. In another embodiment, the float 64 may not have a hollow interior therein, and a portion of the arm body 63 extending from the supporting shaft 66 to the float 64 and the float 64 may have the specific gravity less than the specific gravity of ink, such that a predetermined buoyancy acts thereon, or a portion of the portion of the arm body 63 extending from the supporting shaft 66 to the float 64 and the float 64 may have the specific gravity less than the specific gravity of ink, such that a predetermined buoyancy acts thereon.

[0057] The light-blocking panel 62 is provided at an end of the arm body 63 which is opposite from the float 64. When the ink amount in the ink chamber 36 is greater than or equal to a predetermined amount, the detection arm 60 pivots clockwise, i.e., the direction indicated by the arrow 67 in Fig. 2(B) about the supporting shaft 66 because of the buoyancy acting on the float 64, and the light-blocking panel 62 moves downward in the inner space 35. Then, the light-blocking panel 62 comes into contact with the bottom wall 34A of the ink amount detection portion 34 and remains in a lower position (the position indicated by the solid line in Fig. 2(B)). When the ink amount in the ink chamber 36 is reduced to the predetermined amount, a part of the float 64 is exposed from the ink surface, and the buoyancy is balanced out by the gravity. When the ink amount in the ink chamber 36 is further reduced to an amount less than the predetermined amount, the float 64 moves down as the ink surface in the ink chamber 36 is lowered. When this occurs, the detection arm 60 pivots counterclockwise i.e., the direction indicated by the arrow 68, in Fig. 2(B) about the supporting shaft 66, and the light-blocking panel 62 moves upward in the inner space 35 and moves apart from the bottom wall 34A. Then, the light-blocking panel 62 comes into contact with the upper wall 34D and remains in an upper position (the position indicated by the broken line in Fig. 2(B)). In Fig. 2(B), the position of the detection arm 60 in which the light-blocking panel 62 contacts the bottom wall 34A is shown by the solid line, and the position of the detection arm 60 in which the light-blocking panel 62 is separated away from the bottom wall 34A is shown by the broken line.

[0058] The light-blocking panel 62 is aligned with an irradiated portion 34C in the width direction 51 when the light-blocking panel 62 is in the lower position. The irradiated portion 34C is a lower portion of the side walls 34B. In contrast, when the light-bloelcing panel 62 is in

the upper position, the light-blocking panel 62 is positioned above the irradiated portion 34C, and is not aligned with the irradiated portion 34C in the width direction 51.

[0059] Light emitted from the optical detector 114, described later, is blocked by the light-blocking panel 62, or is allowed to pass through the ink amount detection portion 34 in the width direction 51 depending on the position of the light-blocking panel 62 in the inner space 105 with respect to the height direction 52.

[0060] When the ink cartridge 30 is in an ink supply position, as an example of the predetermined mounted position of the present invention, in which the ink cartridge 30 can supply ink from the ink chamber 36 to the exterior of the ink cartridge 30 in the cartridge holder 110, light is emitted from a light-emitting portion of the optical detector 114 (see Figs. 3(A) and 3(B)), toward the irradiated portion 34C of the side walls 34B of the ink amount detection portion 34. When the light-blocking panel 62 is in the lower position (the position indicated by the solid line in Fig. 2(B), the light passing through the irradiated portion 34C is blocked by the light-blocking panel 62. In contrast, when the light-blocking panel 62 is in the upper position (the position indicated by the broken line in Fig. 2(B)), the light passes through the inner space 35 without being blocked by the light-blocking panel 62 and reaches the light-receiving portion of the optical detector 114. Therefore, whether or not the predetermined amount or more of ink remains in the ink chamber 36 may be determined by analyzing a waveform of an output signal from the light-receiving portion or by detecting attenuation or the presence or absence of the output signal.

[0061] The air communication opening 71 is positioned at the front wall 40 above the ink amount detection portion 34. The air communication opening 71 penetrates through the front wall 40, and the exterior of the ink cartridge 30 can be in fluid communication with the ink chamber 36 via the air communication opening 71. The pressure in the ink chamber 36 may be maintained at the atmospheric pressure by air coming into the ink chamber 36 via the air communication opening 71. The ink supply portion 72 is positioned below the ink amount detection portion 34. The ink supply portion 72 is made of a resilient cylindrical member, such as rubber, and extends from the front wall 40 forward in the insertion direction 50. The ink supply portion 72 has a through hole 73 formed through the center thereof, and the ink stored in the ink chamber 36 can flow out through the through hole 73. Although the through hole 73 is shown open in Fig. 2 (B), the through hole 73 is closed by the resiliency of the ink supply portion 72. When the ink cartridge 30 is mounted to the cas-tridge holder 110, an ink supply tube 122 of the cartridge holder 110 is inserted into the through hole 73.

[0062] A imaginary plane 56 connecting a projecting end (front end) of a projecting portion 76 and a projecting end (front end) of the ink amount detection portion 34 is positioned in front of the ink supply portion 72 in the insertion direction 50. In other words, the ink supply portion 72 does not extend beyond the imaginary plane 56 in the insertion direction 50. Therefore, even when the ink cartridge 30 is dropped, the ink supply portion 72 does not directly receive an external impact, and therefore the ink supply portion 72 may be protected from the impact.

[0063] The ink cartridge 30 comprises a rib 43 extending in the depth direction 53. The rib 43 comprises two side surfaces extending upward from an upper wall 39 of the ink cartridge 30 and an upper surface connecting top ends of the both side surfaces with each other. The width of the rib 43 is less than the width of the upper wall 39 in the width direction 51. An end surface 44 of the rib 43 is flush with the front wall 40, and a contact surface 45 opposite the end surface 44 is positioned at a middle portion of the upper wall 39 in the depth direction 53. The contact surface 45 of the rib 43 is a portion with which a lock lever 145, described later, contact when the ink cartridge 30 is mounted to the cartridge holder 110 in the ink supply position.

[0064] The ink cartridge 30 comprises the projecting portion 76. The projecting portion 76 is configured to indirectly act on light passing through a detection area 127 of an optical detector 126 (see Fig. 3(A)) during an insertion of the ink cartridge 30 into the cartridge holder 110. The projecting portion 76 is positioned at a lower end of the front wall 40 when the ink cartridge 30 is in the upright position shown in Fig. 2(A). The projecting portion 76 is positioned below the ink supply portion 72, and projects outward (forward) in the insertion direction 50 from the front wall 40. In this embodiment, the width of the projecting portion 76 is the same as the width of the front wall 40 in the width direction 51. The projecting portion 76 projects outward (forward) further than the ink supply portion 72 in the insertion direction 50. In other words, the projecting distance of the projecting portion 76 (the distance from the front wall 40 to the projecting end of the projecting portion 76) is greater than the projecting distance of the ink supply portion 72 (the distance from the front wall 40 to the projecting end of the ink supply portion 72). The projecting portion 76 is configured to contact and move, i.e., press a sliding member 135 (see Fig. 3) slidably supported in the cartridge holder 110 and causes the sliding member 135 to slide in the insertion direction 50 during the insertion of ink cartridge 30 into the cartridge holder 110.

[0065] The ink supply device 100 is provided in the printer 10. The ink supply device 100 is configured to supply ink to the recording head 21 (see Fig. 1) provided in the printer 10. The ink supply device 100 comprises the cartridge holder 110 to which a plurality of the ink cartridges 30 can be mounted.

[0066] Referring to Figs. 3(A) and 3(B), the cartridge holder 110 is configured to accommodate the ink cartridges 30 in the interior thereof. The cartridge holder 110 has an opening 112 at the front side of the printer 10 (left side in Figs. 3(A) and 3(B)). The ink cartridges 30 are inserted into the cartridge holder 110 through the opening 112 in a horizontal direction. The cartridge holder 110 is

configured to support the ink cartridge 30, such that the ink cartridge 30 can move in a horizontal direction. The cartridge holder 110 comprises a bottom wall 132, and when the ink cartridge 30 is mounted to the cartridge holder 110 in the ink supply position, the ink cartridge 30 is supported on a supporting surface which is an upper surface of the bottom wall 132. The supporting surface is a planar surface. When the ink cartridge 30 is mounted to the cartridge holder 110 in the ink supply position, the depth direction 53 is parallel to the insertion direction 50 and the removal direction 54, the width direction 51 is perpendicular to the insertion direction 50 and the removal direction 54 and perpendicular to a direction perpendicular to the supporting surface, and the height direction 52 is perpendicular to the insertion direction 50 and the removal direction 54 and parallel to the direction perpendicular to the supporting surface.

[0067] The cartridge holder 110 comprises an end wall 117 opposite the opening 112. An opening 119 is formed through the lower portion of the end wall 117 from the inner surface of the end wall 117 to the outer surface of the end wall 117. A connecting portion 121 and an ink supply tube 122 are provided at the inner surface of the end wall 117 so as to be in fluid communication with the opening 119. The flexible ink tube 20 (see Fig. 1) is connected to the outer surface of the end wall 117 so as to be in fluid communication with the opening 119. When the ink cartridge 30 is mounted to the cartridge holder 110, the ink supply tube 122 is inserted into the through hole 73 of the ink supply portion 72. Accordingly, an ink path extending from the ink chamber 36 of the ink cartridge 30 via the through hole 73 of the ink supply portion 72 and the ink supply tube 122 to the connecting portion 121 is formed, and the ink stored in the ink chamber 36 is supplied to the recording head 21 via the ink tube 20.

[0068] The optical detector 114 is provided at a middle portion of the end wall 117 of the cartridge holder 110 with respect to the height direction 52. The optical detector 114 is configured to detect the light-blocking panel 62 of the detection arm 60 positioned in the ink cartridge 30 mounted to the cartridge holder 110. The light-emitting portion and the light-receiving portion are positioned in a housing formed of resin shaped into a substantially U-shape. In this embodiment, the optical detector 114 is a light-transmissive photo interrupter having the light-emitting portion and the light-receiving portion. The light-emitting portion is configured to emit light such as visible light or infrared light toward the light-receiving portion. The light-emitting portion is, for example, a light-emitting diode. The light-receiving portion is configured to receive the light emitted from the light-emitting portion. The light-receiving portion is, for example, a photo transistor. The light-emitting portion and the light-receiving portion are positioned so as to oppose to each other in the width direction 51. The optical detector 114 is provided for each ink cartridge 30. That is, if the cartridge holder 110 is configured to accommodate four ink cartridges 30, four optical detectors 114 corresponding to the four ink cartridges 30 respectively are provided in the cartridge holder 110.

[0069] The optical detector 114 is electrically connected to a controller 90 (see Fig. 8), and an electric signal output from the light-receiving portion is input to the controller 90. In this embodiment, when the ink cartridge 30 is positioned in the ink supply position in the cartridge holder 110, a lower portion of the ink amount detection portion 34 enters the detection area 115 extending from the light-emitting portion to the light-receiving portion of the optical detector 114. In other words, the irradiated portion 34C (see Fig. 2) of the side walls 34B of the ink amount detection portion 34 is positioned in the detection area 115. The controller 90 determines whether the remaining amount of ink stored in the ink chamber 36 becomes less than the predetermined amount based on the output signal, which depend on intensity of light received by the light-receiving portion, from the optical detector 114 when the ink amount detection portion 34 enters the detection area 115.

[0070] The optical detector 126 is provided outside of the cartridge holder 110 adjacent to the lower end of the end wall 117. The optical detector 126 is configured to indirectly detect the presence and absence of the projecting portion 76 of the ink cartridge 30 when the ink cartridge 30 is mounted to the cartridge holder 110. The optical detector 126 comprises a light-emitting portion configured to emit light and a light-receiving portion configured to receive the light emitted from the light-emitting portion. The light-emitting portion and the light-receiving portion are positioned in a housing formed of resin shaped into a substantially U-shape. In this embodiment, the optical detector 126 is a light-transmissive photo interrupter having the light-emitting portion and the light-receiving portion positioned so as to face each other in the width direction 51. The optical detector 126 is electrically connected to the controller 90 (see Fig. 8), and an electric signal output from the light-receiving portion is input to the controller 90. The signal output from the light-receiving portion depends on intensity of light received by the light-receiving portion. In another embodiment, a reflection detecting type of a photo-interrupter may be employed instead of the optical detector 126.

[0071] Referring to Figs. 3(A) and 3(B), the cartridge holder 110 is provided with the sliding member 135. The sliding member 135 is provided for each ink cartridge 30. If the cartridge holder 110 is configured to accommodate four ink cartridges 30, four sliding members 135 corresponding to the four ink cartridges 30 respectively are provided.

[0072] The sliding member 135 is configured as a separate member from the ink cartridge 30 and the cartridge holder 110. The sliding member 135 is positioned in a recess 130 formed in the bottom wall 132 of the cartridge holder 110 adjacent to the end wall 117. An opening 129 is formed through the end wall 117 in the insertion direction 50 at a lower portion of the end wall 117. The recess 130 continues to the opening 129. The sliding member

135 is configured to slide in recess 130 along a bottom surface of the recess 130 in the insertion/removal directions 105, i.e., the insertion direction 50 and the removal direction 54. The sliding member 135 is slidable between a position away from the detection area 127 of the optical detector 126 as shown in Fig. 3(A) and a position positioned in the detection area 127 as shown in Fig. 3(B). In other words, the optical detector 126 is positioned such that the detection area 127 of the optical detector 126 is positioned within the sliding range of the sliding member 135.

[0073] The sliding member 135 is provided with an contact portion 137 with which the projecting portion 76 of the ink cartridge 30 comes into contact during the insertion of the ink cartridge 30 into the cartridge holder 110. The contact portion 137 projects upward from a main body 136 of the sliding member 135. The contact portion 137 is positioned in the line of travel of the projecting portion 76 during the insertion of the ink cartridge 30 into the cartridge holder 110.

[0074] A coil spring 139 is positioned in the recess 130. One end of the coil spring 139 is connected to an end surface 133 of the recess 130 positioned at the opening 112 side of the recess 130. The other end of the coil spring 139 is connected to the main body 136 of the sliding member 135, such that the coil spring 139 is positioned between the end surface 133 of the recess 130 and the main body 136 of the sliding member 135. When the coil spring 139 has a natural length, i.e., when an external force is not applied to the sliding member 135, the sliding member 135 is positioned closer to the end surface 133 than the optical detector 126 is. During the insertion of the ink cartridge 30 into the cartridge holder 110, the projecting portion 76 of the ink cartridge 30 presses the contact portion 137. Upon receipt of a pressing force from the projecting portion 76, the sliding member 135 moves in the insertion direction 50, and the coil spring 139 is expanded. When this occurs, the coil spring 139 tries to contract, and therefore the sliding member 135 receives a pulling force from the coil spring 139 in the removal direction 54 toward the opening 112. Then, when the ink cartridge 30 reaches the ink supply position, the sliding member 135 enters the detection area 127 to block the light passing through the detection area 127. When the sliding member 135 enters the detection area 127, the presence of the projecting portion 76 is indirectly detected, and the signal output from the light-receiving portion 128 of the optical detector 126 changes. In this manner, the projecting portion 76 indirectly acts on the light passing through the detection area 127 by contacting and moving the sliding member 135, such that the sliding member 135 enters the detection area 127 and intersects the path of the light in the detection area 127.

[0075] Referring to Figs. 3 (A) and 3(B), the cartridge holder 110 is provided with a lock mechanism 144. When the ink cartridge 30 is in the ink supply position, the lock mechanism 144 restricts the movement of the ink cartridge 30 in the removal direction 54 opposite from the insertion direction 50 and restrains the ink cartridge 30 in the ink supply position. The lock mechanism 144 is positioned at an upper side of the cartridge holder 110 adjacent to the opening 112 of the cartridge holder 110. Because the sliding member 135 is positioned at a lower side of the cartridge holder 110, the sliding member 135 is shifted from the lock mechanism 144 in a direction (the height direction 52) perpendicular to the supporting surface of the bottom wall 132. The sliding member 135 is also shifted from the lock mechanism 144 in the insertion direction 50.

[0076] The lock mechanism 144 comprises the lock lever 145 and a coil spring 148 configured to apply an urging force to the lock lever 145. The lock lever 145 is supported by the cartridge holder 110 via a shaft, and is configured to pivot between an unlock position shown in Fig. 3(B) and a lock position shown in Fig. 3 (A). The coil spring 148 urges the lock lever 145 toward the lock position. An end of the lock lever 145 in the insertion direction 50 is an contact end 146 configured to come into contact with the contact surface 45 of the ink cartridge 30, such that the ink cartridge 30 is locked with respect to the removal direction 54 against an urging force applied from the coil spring 139 transmitted via the sliding member 135. The sliding member 135 is shifted from a contact point 149 between the contact end 146 of the lock lever 145 and the contact surface 45 of the ink cartridge 30 in the direction (the height direction 52) perpendicular to the supporting surface of the bottom wall 132. The sliding member 135 is also shifted from the contact point 149 in the insertion direction 50.

[0077] An optical detector 141 is provided adjacent to the lock mechanism 144. The optical detector 141 has a configuration similar to the optical detector 126 described above, and comprises a detection area 142. A detection portion 147 is provided on the lock lever 145 opposite from the contact end 146. The optical detector 141 is arranged, such that the detection area 142 is positioned in a range of rotation of the detection portion 147 of the lock lever 145. Therefore, the detection portion 147 is configured to enter the detection area 142 according to the position of the lock lever 145. In this embodiment, when the lock lever 145 is in the lock position, the detection portion 147 is positioned in the detection area 142, and when the lock lever 145 is in the unlock position, the detection portion 147 is positioned out of the detection area 142. The signal output from the light-receiving portion of the optical detector 141 depends on intensity of light received by the light-receiving portion of the optical detector 141. Whether the lock lever 145 is in the lock position or in the unlock position is determined based on the signal output from the optical detector 141 when the detection portion 147 is in the detection area 142, or when the detection portion 147 is positioned out of the detection area 142.

[0078] Referring to Fig. 4(A), when the ink cartridge 30 is inserted into the cartridge holder 110 in the insertion direction 50, the end surface 44 of the rib 43 comes into

contact with the contact end 146 of the lock lever 145. When the ink cartridge 30 is further inserted, the lock lever 145 pivots counterclockwise, and the contact end 146 is moved upward, such that the position of the lock lever 145 is changed from the lock position to the unlock position. The contact end 146 having moved upward is placed on the upper surface of the rib 43. Thereafter, when the ink cartridge 30 is further inserted, the contact end 146 slides over the upper surface of the rib 43. Then, when the contact end 146 passes the contact surface 45 of the rib 43, the lock lever 145 pivots clockwise, and the contact end 146 moves downward (See Fig. 5(A)).

[0079] Before the ink cartridge 30 is inserted into the cartridge holder 110, the lock lever 145 is in the lock position (see Fig. 3(A)), and light of the optical detector 141 is blocked by the detection portion 147 of the lock lever 145 in the detection area 142. Therefore, the signal output from the optical detector 141 is a LOW-level signal (see Fig. 7(A)). When the ink cartridge 30 is inserted and the lock lever 145 pivots to the unlock position, the detection portion 147 is moved to a position out of the detection area 142. Therefore, the signal output from the optical detector 141 is changed from the LOW-level signal to a HI-level signal at a timing T0 in Fig. 7(A).

[0080] Referring to Fig. 4(B), when the ink cartridge 30 is further inserted, the front wall 34E of the ink amount detection portion 34 passes through the detection area 115 of the optical detector 114 between a timing T1 and a timing T2 in Fig. 7(A). Nevertheless, because the front wall 34E is translucent, the signal output from the optical sensor 114 is unchanged and remains as a HI-level signal between the timing T1 and the timing T2 in Fig. 7(A).

[0081] Referring to Fig. 4(B), the projecting portion 76 comes into contact with the contact portion 137 of the sliding member 135, and the projecting portion 76 presses the contact portion 137 in the insertion direction 50.

[0082] When the ink cartridge 30 is further inserted, the sliding member 135 receives a force from the projecting portion 76 and starts to move in the insertion direction 50. When this occurs, the coil spring 139 is elongated with the movement of the sliding member 135. Accordingly, a force causing the coil spring 139 to contract is generated in the coil spring 139. The force generated in the coil spring 139 acts on the sliding member 135 as a force to move the sliding member 135 in the removal direction 54 opposite the insertion direction 50. In other words, the sliding member 135 is resiliently urged in the removal direction 54 by the coil spring 139.

[0083] Then, referring to Fig. 5(A), when the ink cartridge 30 reaches the ink supply position in the cartridge holder 110, the irradiated portion 34C of the ink amount detection portion 34 is positioned in the detection area 115 of the optical detector 114. The ink supply position is a position in which the ink cartridge 30 can supply ink from the ink chamber 36 to the ink supply tube 122 in the cartridge holder 110, and in this embodiment, is a position where the ink supply tube 122 is inserted into the through hole 73 of the ink supply portion 72 as shown in Fig. 5 (A) and 5(B).

When the irradiated portion 34C enters the detection area 115, if the predetermined amount or more of ink is stored in the ink chamber 36, that is, when the light-blocking panel 62 is in the lower position (solid line), the light is blocked by the light-blocking panel 62 in the detection area 115. In this case, the signal output from the optical detector 114 is changed from the HI-level signal to the LOW-level signal at a timing T3 in Fig. 7(A). In contrast, when the amount of ink in the ink chamber 36 is less than the predetermined amount, that is, when the light-blocking panel 62 is in the upper position (broken line), the light passing through the detection area 115 is not blocked by the light-blocking panel 62, and hence the signal remains as the HI-level signal (see a broken line in Fig. 7(A)).

[0084] During the insertion of the ink cartridge 30 up to the ink supply position, the sliding member 135 is pressed by the projecting portion 76, and hence the sliding member 135 enters the detection area 127 of the optical detector 126. When this occurs, the signal output from the light-receiving portion of the optical detector 126 is changed from a HI-level signal to a LOW-level signal at a timing T4 in Fig. 7(A).

[0085] Referring to Fig. 5(A), when the ink cartridge 30 reaches the ink supply position, the contact surface 45 of the rib 43 has passed the contact end 146 of the lock lever 145. Because the contact end 146 is not supported by the upper surface of the rib 43 any longer, the lock lever 145 pivots clockwise, and the contact end 146 moves down and comes into contact with the upper wall 39 of the ink cartridge 30. When this occurs, the light of the optical detector 141 is blocked by the detection portion 147 of the lock lever 145 in the detection area 142. Accordingly, the signal output from the optical detector 141 is changed from the HI-level signal to the Low-level signal at a timing T5 in Fig. 7(A).

[0086] Subsequently, when the pressing force acting on the ink cartridge 30 by a user in the insertion direction 50 is released, the projecting portion 76 of the ink cartridge 30 receives a force in the removal direction 54 from the coil spring 139 via the sliding member 135. Referring to Fig. 5(B), the ink cartridge 30 receiving the force is caused to move in the removal direction 54, and the ink cartridge 30 is moved in the removal direction 54 by an amount corresponding to a clearance provided between the contact end 146 of the lock lever 145 and the contact surface 45 of the rib 43. The contact end 146 and the contact surface 45 are brought into contact with each other, such that the movement of the ink cartridge 30 in the removal direction 54 is prevented.

[0087] The cartridge holder 110 is formed to be slightly larger than the external dimensions of the ink cartridge 30 so as to allow the ink cartridge 30 to be inserted therein. Therefore, when the ink cartridge 30 is mounted to the cartridge holder 110, there is a clearance between the outer surface of the ink cartridge 30 and the inner surface of the cartridge holder 110. In addition, there is

a clearance between the contact end 146 and the contact portion 45 so as to allow the lock lever 145 to pivot to the lock position readily when the ink cartridge 30 reaches the ink supply position. Because of these clearances, the ink cartridge 30 may be mounted to the cartridge holder 110 in an abnormal mounted state.

[0088] More specifically, referring to Fig. 6, because of the clearances described above, when the ink cartridge 30 receives the force in the removal direction 54, the ink cartridge 30 may rotate clockwise about a contact point 149 between the contact end 146 of the lock lever 145 and the contact portion 45 of the rib 43. At this time, the ink supply tube 122 and the through hole 73 of the ink supply portion 72 may be misaligned because the ink supply portion 72 is positioned closer to the sliding member 135 than to the contact point 149 and therefore moves to a large extent. Ink leakage may occur when the ink supply tube 122 and the through hole 73 of the ink supply portion 72 are misaligned. Also, there is a possibility that the ink supply tube 122 may be cracked, or the ink supply portion 73 may be damaged. When the ink cartridge 30 rotates about the contact point 149, the projecting portion 76 which is far apart from the contact point 149 moves in the removal direction 54 to a large extent, and hence the sliding member 135 moves out of the detection area 127 of the optical detector 126 even though the ink cartridge 30. When this occurs, the signal output from the optical detector 126 is changed from the LOW-level signal to the HI-level signal at a timing T7 in Fig. 7(B).

[0089] Referring to Fig. 8, the controller 90 is configured to control the entire operation of the printer 10. The controller 90 is configured as a microcomputer comprising a CPU 91, a ROM 92, a RAM 93, an EEPROM 94, and an ASIC 95.

[0090] The ROM 92 stores programs for the CPU 91 to control various operations of the printer 12, including a program for performing a process shown in Fig. 9. The RAM 93 is used as a storage area for temporality storing data or signals or a work area for the data processing, for the CPU 91 to execute the programs described above. The RAM 93 stores levels of the signals output from the optical detectors 114, 126, and 141. The EEPROM 94 stores setting, flags, and the like which are to be retained even after the power source is turned OFF.

[0091] The ASIC 95 comprises a timer 96 integrated therein. The timer 96 is configured to start counting a preset time (Δt in this embodiment) when a predetermined signal is supplied thereto and, when the preset time elapsed, output a signal indicating the elapse of the time. Instead of the timer 96, a delay circuit may be employed.

[0092] The optical detector 126, the optical detector 141, and the optical detector 114 are electrically connected to the ASIC 95. Although not shown in Fig. 8, a drive circuit configured to drive respective rollers such as the paper feed roller 23 and the conveying roller pair 25 (see Fig. 1), an input unit configured to input image recording instructions to the controller 90 and the like, and a display unit configured to display information relating to the printer 10 are also electrically connected.

[0093] The light-receiving portion of the optical detector 126 outputs an analogue electric signal (voltage signal or current signal) depending on the intensity of light received by the light-receiving portion. The signal output from the light-receiving portion is supplied to the controller 90. The controller 90 determines the output signal to be the HI-level signal when the level of the signal (voltage value or current value) is greater than or equal to a first predetermined threshold value and to be the LOW-level signal when the level of the signal is less than the first predetermined threshold value. In this embodiment, when the light of the optical detector 126 is blocked in the detection area 127, the level of signal is less than the first predetermined threshold value, and hence the output signal is determined as the LOW-level signal. Also, when the light passing through the detection area 127 is not blocked, because the level of signal is greater than or equal to the first predetermined threshold value, the output signal is determined as the HI-level signal.

[0094] Similarly, the light-receiving portion of the optical detector 141 outputs an analogue electric signal (voltage signal or current signal) depending on the intensity of light received by the light-receiving portion. The signal output from the light-receiving portion is supplied to the controller 90. The controller 90 determines the output signal to be the HI-level signal when the level of the signal (voltage value or current value) is greater than or equal to a second predetermined threshold value and to be the LOW-level signal when the level of the signal is less than the second predetermined threshold value. In this embodiment, when the light of the optical detector 141 is blocked in the detection area 142, the level of signal is less than the second predetermined threshold value, and hence the output signal is determined as the LOW-level signal. Also, when the light passing through the detection area 142 is not blocked, because the level of signal is greater than or equal to the second predetermined threshold value, the output signal is determined as the HI-level signal. The second predetermined threshold value may be the same as the first predetermined threshold value.

[0095] Similarly, the light-receiving portion of the optical detector 114 outputs an analogue electric signal (voltage signal or current signal) depending on the intensity of light received by the light-receiving portion. The signal output from the light-receiving portion is supplied to the controller 90. The controller 90 determines the output signal to be the HI-level signal when the level of the signal (voltage value or current value) is greater than or equal to a third predetermined threshold value and to be the LOW-level signal when the level of the signal is less than the third predetermined threshold value. In this embodiment, when the light of the optical detector 114 is blocked in the detection area 115, the level of signal is less than the third predetermined threshold value, and hence the output signal is determined as the LOW-level signal. Al-

so, when the light passing through the detection area 115 is not blocked, because the level of signal is greater than or equal to the third predetermined threshold value, the output signal is determined as the HI-level signal. The third predetermined threshold value may be the same as the first predetermined threshold value and the second predetermined threshold value.

[0096] Referring to Fig. 9, the controller 90 is configured to determine whether the ink cartridge 30 is mounted to the cartridge holder 110 in a normal mounted state or abnormal mounted state, based on the signals output from the optical detector 126 and the optical detector 141.

[0097] When the signal output from the optical detector 141 changes from the LOW-level signal to the HI-level signal (at the timing T0 in Figs. 7(A) and 7(B)), the controller 90 starts the process of Fig. 9. This change of the signal output from the optical detector 141 means that the ink cartridge 30 is started to be inserted into the cartridge holder 110. At the timing T0, the signal output from the optical detector 126 is the HI-level signal.

[0098] In Step S1, whether the ink cartridge 30 has reached the ink supply position in the cartridge holder 110 is determined. In other words, whether the ink cartridge 30 is locked at the ink supply position by the lock mechanism 144 is determined. Specifically, it is determined whether the signal output from the optical detector 141 has changed from the HI-level signal to the LOW-level signal. When the signal has changed from the HI-level signal to the LOW-level signal, it is determined that the ink cartridge 30 has reached the ink supply position. Here, when it is determined that the ink cartridge 30 has reached the ink supply position (Yes in S1), the timer 96 starts counting a preset time Δt in Step S2.

[0099] When it is determined that the preset time Δt counted by the time 96 has elapsed (Yes in S3), in next Step S4, whether or not the signal output from the optical detector 126 is the LOW-level signal is determined at a timing when it is determined that the preset time Δt has elapsed. This determination is performed for determining whether the mounted state of the ink cartridge 30 is normal or abnormal. Referring to Fig. 7(A) for example, when the signal output from the optical detector 126 at a timing T6 is the LOW-level signal, it is determined that the ink cartridge 30 is mounted to the cartridge holder 110 in a normal mounted state. In contrast, referring to Fig. 7(B), when the signal output from the optical detector 126 at the timing T6 is the HI-level signal, it is determined that the ink cartridge 30 is mounted to the cartridge holder 110 in an abnormal mounted state.

[0100] In Step S4, if the signal output from the optical detector 126 is determined to be the HI-level signal (No in S4), a bit flag indicating the abnormal mounted state is set to a register of the CPU 91 (S5). Subsequently, error information is output based on the bit flag (S6). The error information is output for example to a display of the printer 10 or an information processing apparatus, e.g. a personal computer, connected to the printer 10 via a network. In contrast, if the signal output from the optical detector 126 is determined to be the LOW-level signal (Yes in S4), a bit flag indicating the normal mounted state is set to a register of the CPU 91 (S7). Then, the cartridge-mount-complete process such as the image recording process is performed (S8).

[0101] In this manner, in the printer 10 in this embodiment, the mounted state of the ink cartridge 30 in the cartridge holder 110 is determined when the ink cartridge 30 is mounted to the cartridge holder 110. Therefore, chances that the ink cartridge 30 is used in an abnormal mounted state in the cartridge holder 110 are reduced.

[0102] In the embodiment described above, the mounted state is determined at the timing when it is determined that the preset time Δt has elapsed. However, it is also possible to determine the mounted state at a timing when a trigger signal is supplied from an external source after the ink cartridge 30 is locked at the ink supply position by the lock mechanism 144. In another embodiment, the cartridge holder 110 may comprise a cover configured to be opened and closed to cover and uncover the opening 112 of the cartridge holder 110, respectively, and a cover sensor configured to detect an opening and closing movement of the cover. In such a case, it is also possible to determine the mounted state when a signal is supplied from the cover sensor when the opening 112 is covered by the cover.

[0103] Referring to Fig. 10(A) to Fig. 11(B), the second embodiment of the invention will be described. Common components to those in the first embodiment described above are designated by the same reference numerals as those used in the first embodiment, and description thereof will be omitted.

[0104] The second embodiment is different from the first embodiment in that an ink cartridge 150 comprises a projecting portion 153 projecting from the end surface 44 of the rib 43 in the insertion direction 50, and in that an optical detector 151 is provided in a cartridge holder 155.

[0105] The projecting portion 153 is positioned at an upper portion of the front wall 40 of the ink cartridge 150. The projecting portion 153 is positioned above the ink supply portion 72 and above the ink amount detection portion 34. The ink supply portion 72 is positioned between the projecting portion 153 and the projecting portion 76. The projecting portion 153 has a width which is less than the width of the rib 43 in the width directions 51 and is configured to enter a detection area 152 of the optical detector 151. The projecting portion 153 projects further than the ink supply portion 72 in the insertion direction 50. In this embodiment, the distance the projecting portion 153 projects from the front wall 40 in the insertion direction 50 is the same as the distance the projecting portion 76 projects from the front wall 40 in the insertion direction 50. The projecting portion 153 is positioned closer to the contact point 149 than to the sliding member 135 in the direction perpendicular to the supporting surface of the bottom wall 132 when the ink cartridge 150 is in the ink supply position in the cartridge

holder 155.

[0106] The optical detector 151 is provided at a position corresponding to the projecting portion 153 in the cartridge holder 155. The optical detector 151 has the same configuration as the optical detector 126 described above, and comprises a light-emitting portion configured to emit light and a light-receiving portion configured to receive the light emitted from the light-emitting portion. The light-emitting portion and the light-receiving portion of the optical detector 151 are positioned so as to face each other in a horizontal direction (in the width direction 51). The optical detector 151 is positioned at an upper portion of the inner side of the end wall 117 of the cartridge holder 155. The optical detector 151 is configured to detect the presence or absence of the projecting portion 153 of the ink cartridge 150 mounted to the cartridge holder 155. As shown in Fig. 11(B), when the ink cartridge 150 is in the ink supply position, the projecting portion 153 enters a detection area 152 of the optical detector 151 and blocks the light passing through the detection area 152.

[0107] In this embodiment, the controller 90 determines the mounted state of the ink cartridge 150 mounted to the cartridge holder 155 based on the signals output from the optical detector 126 and the optical detector 151, respectively. Specifically, when it is determined that the signal output from at least one of the optical detector 126 and the optical detector 151 is the HI-level signals, in Step S4 of the flowchart in Fig. 9, the controller 90 determines that the ink cartridge 30 is in the abnormal mounted state in Step 5. In contrast, when it is determined that the signals output from both the optical detector 126 and the optical detector 151 are the LOW-level signals, in Step S4 of the flowchart in Fig. 9, the controller 90 determines that the ink cartridge 30 is in the normal mounted state in S7. In this manner, by using the signals output from both the optical detector 126 and the optical detector 151, whether the mounted state is normal or abnormal is determined with high degree of accuracy even when the ink cartridge 150 becomes out of alignment in any direction.

[0108] Referring to Figs. 12(A) and 12(B), a third embodiment of the present invention will be described. Common components to those in the first embodiment described above are designated by the same reference numerals as those used in the first embodiment and description thereof will be omitted.

[0109] The third embodiment is different from the first embodiment described above in that the sliding member 135, the coil spring 139, the opening 129, and the recess 130 are not provided in a cartridge holder 165, and in that an optical detector 163 is provided instead of the optical detector 126. It is also different from the first embodiment described above in that coil springs 167, 168 are fixed to the inner surface of the end wall 117 of the cartridge holder 165. It is also different from the first embodiment described above in that an ink cartridge 160 comprises the projection portion 76 having a narrower width than that of the projecting portion 76 of the ink cartridge 30 of the first embodiment, so that the projection portion 76 can enter a detection area 164 of the optical detector 163.

[0110] The optical detector 163 is provided at a position corresponding to the projecting poition76 in the cartridge holder 165. The optical detector 163 has the same configuration as the optical detector 126. The optical detector 163 is provided on a lower portion of the inner side of the end wall 117 of the cartridge holder 165. The optical detector 163 is configured to detect the presence or absence of the projecting portion 76 of the ink cartridge 160 mounted to the cartridge holder 165. As shown in Fig. 12 (A), the detection area 164 of the optical detector 163 is positioned inside the cartridge holder 165. The coil springs 167 and 168 extend perpendicularly from the inner wall 117 toward the opening 112. The direction in which the coil springs 167, 168 expand and contact is parallel to the insertion and removal directions 105 of the ink cartridge 160.

[0111] Referring to Fig. 12(A), when the ink cartridge 160 is inserted into the cartridge holder 165, the front wall 40 of the ink cartridge 165 comes into contact with distal ends of the coil springs 167, 168. When the ink cartridge 165 is pressed in the insertion direction 50 against the coil springs 167, 168, the coil springs 167, 168 start to contract. Accordingly, the resilient urging force is applied to the ink cartridge 165 in the removal direction 54 from the coil springs 167, 168. Referring to Fig. 12(B), when the ink cartridge 30 reaches the ink supply position, the projecting portion 76 enters the detection area 164 of the optical detector 163 and blocks the light of the optical detector. Accordingly, the projecting portion 76 is directly detected by the optical detector 163. The projecting portion 76 is shifted from the contact point 149 in the direction perpendicular to the supporting surface of the bottom wall 132. The projecting portion 76 is also shifted from the contact point 149 in the insertion direction 50. The lock mechanism 144 is positioned at an upper side of the cartridge holder 165 adjacent to the opening 112 of the cartridge holder 165. Because the projecting portion 76 is positioned adjacent to a lower side of the cartridge holder 165, the projecting portion 76 is shifted from the lock mechanism 144 in the direction perpendicular to the supporting surface of the bottom wall 132. The projecting portion 76 is also shifted from the lock mechanism 144 in the insertion direction 50.

[0112] In this embodiment, the controller determines whether or not the signal output from the optical detector 163 is the LOW-level signal in S4 of the flowchart in Fig. 9.

[0113] In this configuration as well, when the ink cartridge 30 is locked by the lock mechanism 144 in the ink supply position, the ink cartridge 160 may be inclined relative to the cartridge holder 165 and the projection portion 76 may move out of the detection area 164 because the ink cartridge 160 may be rotated clockwise about the contact point 149. If the signal output from the optical detector 163 is the HI-level signal in S4, the

mounted state of the ink cartridge 30 in the cartridge holder 165 is determined to be abnormal in S5, and error information is output in S6, so that the ink cartridge 160 is prevented to be used in the abnormal mounted state.

[0114] Instead of the coil springs 167, 168, a spring, e.g., a silicon spring, may be provided in the ink supply portion 72. The spring may be configured to urge a valve element toward the through hole 73 of the ink supply portion 72 from the ink chamber 36 side in the insertion direction 50, such that the valve element closes the through hole 73. In this case, when the ink cartridge 160 is inserted into the cartridge holder 165, the ink cartridge 160 receives the urging force in the removal direction 54 by the ink supply tube 122 being inserted into the through hole 73 of the ink supply portion 72 and contacting the valve element such that the spring contracts.

[0115] Although the light is blocked by the sliding member 135, the projecting portion 153, or the detection portion 147 entering the respective detection areas 115, 127, 142, 152 and 164 of the optical detectors 114, 126, 141, 151, 163 in the embodiments described above, the sliding member 135, the projecting portion 153, or the detection portion 147 may not necessarily have to block the complete amount of light emitted from the light-emitting portions of the respective optical detectors 114, 126, 141, 151, 163. For example, the sliding member 135, the projecting portion 153, or the detection portion 147 may be configured to change the path of the light emitted from the light-emitting portion by reflecting or diffracting the entirety or part of the light, or may be a frosted glass, an aperture, or a slit, such that the intensity of light is attenuated to less than the predetermined value.

[0116] While the invention has been described in connection with various example structures and illustrative embodiments, it will be understood by those skilled in the art that other variations and modifications of the structures and embodiments described above may be made without departing from the scope of the invention. Other structures and embodiments will be apparent to those skilled in the art from a consideration of the specification or practice of the invention disclosed herein. It is intended that the specification and the described examples are illustrative with the true scope of the invention being defined by the following claims.

Claims

1. An image recording apparatus (10) comprising:

a cartridge mounting portion (110, 155) configured to support an ink cartridge (30, 150) such that the ink cartridge is insertable into the cartridge mounting portion in an insertion direction (50) and removal from the cartridge mounting portion in a removal direction (54), wherein the cartridge mounting portion is configured to supply ink to an outside of the cartridge mounting portion from the ink cartridge mounted to the cartridge mounting portion in a predetermined mounted position;

a restricting member (145) configured to restrict a movement of the ink cartridge in the removal direction by contacting the ink cartridge being in the mounted position;

an urging member (139);

a sliding member (135) configured to be urged by the urging member in the removal direction, wherein the sliding member is configured to move in the insertion direction against an urging force of the urging member in association with an insertion of the ink cartridge into the cartridge mounting portion;

a first detector (126) configured to detect the sliding member; and

a controller (90) configured to perform a cartridge-mount-complete process when the controller determines that the sliding member is detected by the first detector,

wherein the sliding member is shifted from a contact point (149) between the restricting member and the ink cartridge in a direction perpendicular to a supporting surface (132) of the cartridge mounting portion on which the ink cartridge is supported.

2. The image recording apparatus of claim 1, wherein the sliding member is movable in the insertion direction and the removal direction, and is configured to move toward a detection area (127) of the first detector when receiving a pressing force from the ink cartridge in association with the insertion of the ink cartridge into the cartridge mounting portion.

3. The image recording apparatus of claim 2, wherein the restricting member is positioned at a first side of the cartridge mounting portion, and the sliding member is positioned at a second side of the cartridge mounting portion opposite from the first side in the direction perpendicular to the supporting surface.

4. The image recording apparatus of any one of claims 1 to 3, wherein the ink cartridge comprises a pressing portion (76) configured to press the sliding member during the insertion of the ink cartridge into the cartridge mounting portion, and a front wall surface (40) facing forward in the insertion direction during the insertion of the ink cartridge into the cartridge mounting portion, wherein the pressing portion projects in the insertion direction from the front wall surface.

5. The image recording apparatus of any one of claims 1 to 4, further comprises a second detector (151), wherein the ink cartridge comprises a detection portion (153) positioned closer to the contact point than to the sliding member in the direction perpendicular

to the supporting surface when the ink cartridge is in the mounted position, and the second detector is configured to detect the detection portion when the ink cartridge is in the mounted position, wherein the controller is configured to perform the cartridge-mount-complete process when the controller determines that the sliding member is detected by the first detector and the detection portion is detected by the second detector.

6. The image recording apparatus of any one of claims 1 to 5, wherein the ink cartridge comprises a front wall surface (40) facing forward in the insertion direction during the insertion of the ink cartridge into the cartridge mounting portion, and an ink supply portion (72) positioned at the first wall surface and configured to supply ink from an interior of the ink cartridge to an exterior of the ink cartridge, wherein the ink supply portion is positioned closer to the sliding member than to the contact point.

7. The image recording apparatus of any one of claims 1 to 6, wherein each of the first detector and the second detector comprises a light-receiving portion configured to receive light, a light-emitting portion configured to emit light toward the light-receiving portion, and a detection area (127, 152) extending between the light-emitting portion and the light-receiving portion, and when the ink cartridge is in the mounted position, the sliding member and the detection portion enter the detection areas of the first detector and the second detector, respectively.

8. The image recording apparatus of any one of claims 1 to 7, wherein the cartridge mounting portion is configured to support the ink cartridge, such that the ink cartridge can move in a horizontal direction,
wherein the ink cartridge has a width in a width direction (51), a height in a height direction (52), and a depth in a depth direction (53), wherein the width direction, the height direction, and the depth direction are perpendicular to each other, and the width is less than each of the height and the depth, wherein when the ink cartridge is in the mounted position, the depth direction is parallel to the insertion direction and the removal direction, the width direction is perpendicular to the insertion direction and the removal direction and perpendicular to the direction perpendicular to the supporting surface, and the height direction is perpendicular to the insertion direction and the removal direction and parallel to the direction perpendicular to the supporting surface, and
wherein the restricting member is configured to restrict the movement of the ink cartridge in the removal direction by contacting an end portion (45) positioned at an upper portion of the ink cartridge.

9. An image recording apparatus (10) comprising:

a cartridge mounting portion (165) configured to support an ink cartridge (160) such that the ink cartridge is insertable into the cartridge mounting portion in an insertion direction (50) and removal from the cartridge mounting portion in a removal direction (54), wherein the cartridge mounting portion is configured to supply ink to an outside of the cartridge mounting portion from the ink cartridge mounted to the cartridge mounting portion in a predetermined mounted position;
an urging member (167, 168) configured to urge the ink cartridge in the removal direction;
a restricting member (145) configured to restrict a movement of the ink cartridge in the removal direction by contacting the ink cartridge being in the mounted position;
a detector (163) configured to detect a detection portion (76) of the ink cartridge when the ink cartridge is in the mounted position; and
a controller (90) configured to perform a cartridge-mount-complete process when the controller determines that the detection portion is detected by the detector,

wherein the detection portion is shifted from a contact point (149) between the restricting member and the ink cartridge in a direction perpendicular to a supporting surface (132) of the cartridge mounting portion on which the ink cartridge is supported.

10. The image recording apparatus of claim 9, wherein the restricting member is positioned at a first side of the cartridge mounting portion, and the detection portion is positioned adjacent to a second side of the cartridge mounting portion opposite from the first side in the direction perpendicular to the supporting surface.

11. The image recording apparatus of claim 9 or 10, wherein the ink cartridge comprises a front wall surface (40) facing forward in the insertion direction during the insertion of the ink cartridge into the cartridge mounting portion, and the detection portion projects in the insertion direction from the front wall surface.

12. The image recording apparatus of claim 11, wherein the ink cartridge comprises an ink supply portion (72) positioned at the front wall surface and configured to supply ink from an interior of the ink cartridge to an exterior of the ink cartridge, and the ink supply portion is positioned closer to the detection portion than to the contact point.

13. The image recording apparatus of claim 12, wherein the detection portion projects further than the ink supply portion in the insertion direction.

14. The image recording apparatus of any one of claims

9 to 13, wherein the detector comprises a light-receiving portion configured to receive light, a light-emitting portion configured to emit light toward the light-receiving portion, and a detection area (164) extending between the light-emitting portion and the light-receiving portion, and when the ink cartridge is in the mounted position, the detection portion enters the detection area of the detector.

15. The image recording apparatus of any one of claims 9 to 14, wherein the cartridge mounting portion is configured to support the ink cartridge, such that the ink cartridge can move in a horizontal direction,
wherein the ink cartridge has a width in a width direction (51), a height in a height direction (52), and a depth in a depth direction (53), wherein the width direction, the height direction, and the depth direction are perpendicular to each other, and the width is less than each of the height and the depth, wherein when the ink cartridge is in the mounted position, the depth direction is parallel to the insertion direction and the removal direction, the width direction is perpendicular to the insertion direction and the removal direction and perpendicular to the direction perpendicular to the supporting surface, and the height direction is perpendicular to the insertion direction and the removal direction and parallel to the direction perpendicular to the supporting surface, and
wherein the restricting member is configured to restrict the movement of the ink cartridge in the removal direction by contacting an end portion (45) positioned at an upper portion of the ink cartridge.

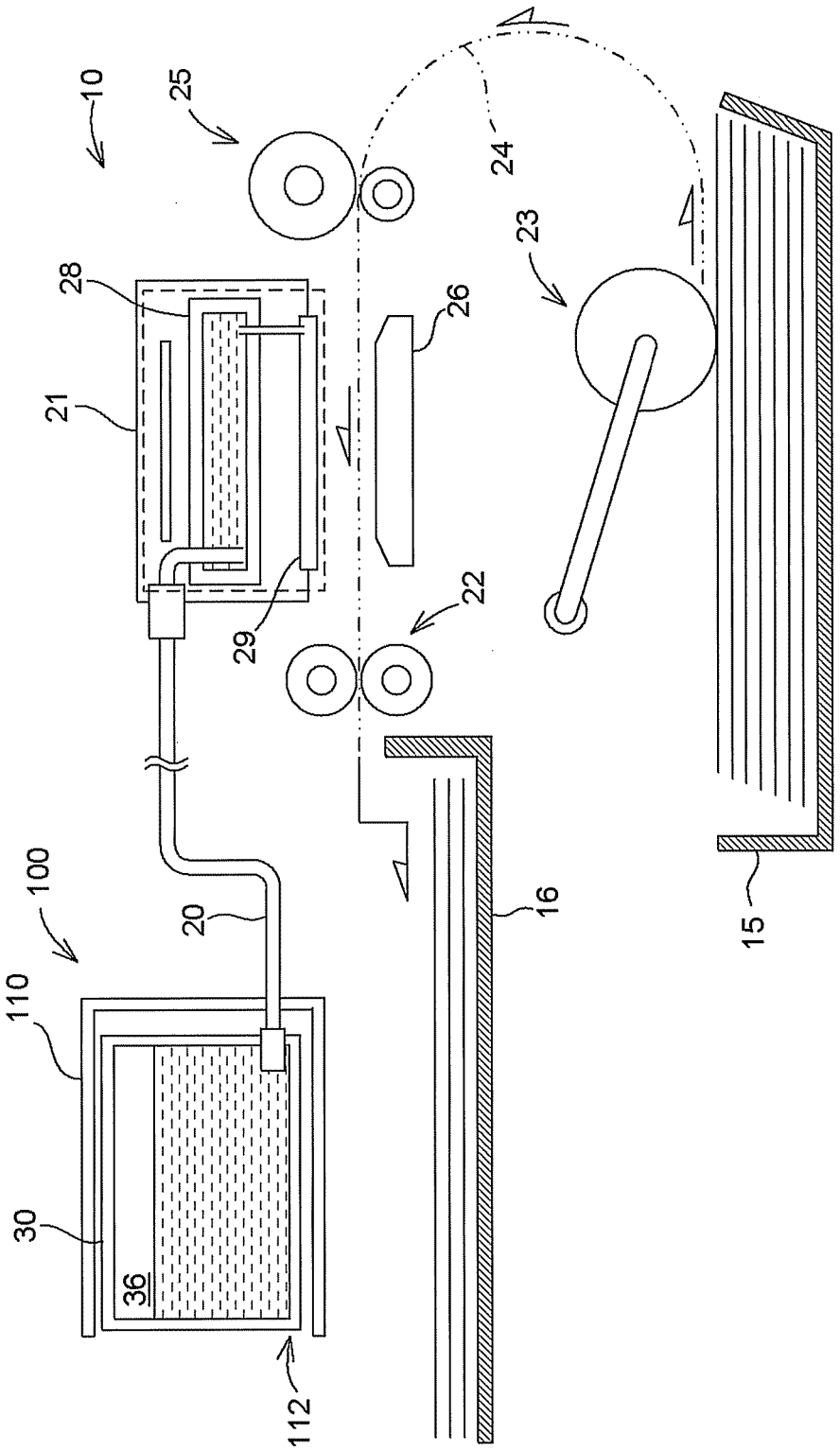

Fig.1

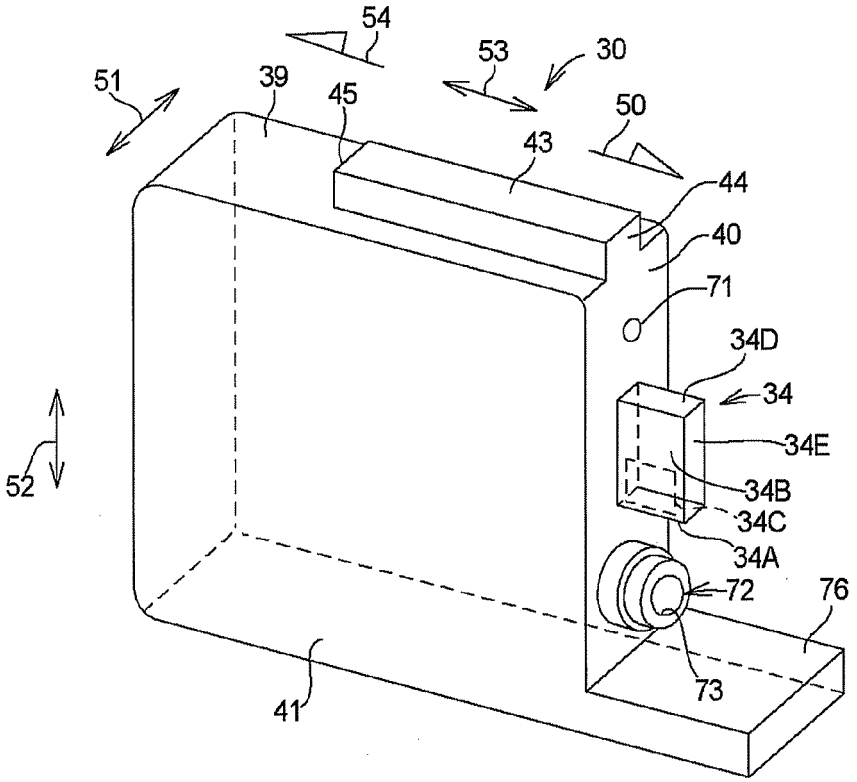
54
53
30
51
39
45
50
43
44
40
71
34D
34
34E
34B
34C
34A
72
76
52
73
41

Fig.2A

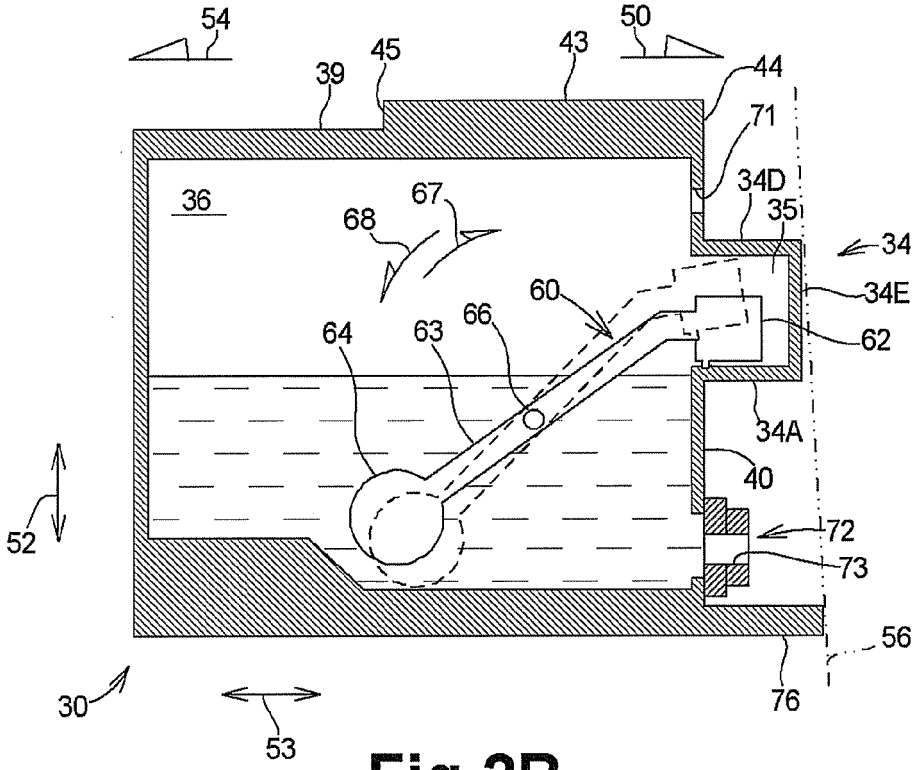
54
50
43
45
39
44
71
34D
36
67
68
35
34
34E
60
66
64
63
62
34A
40
52
72
73
56
30
76
53

Fig.2B

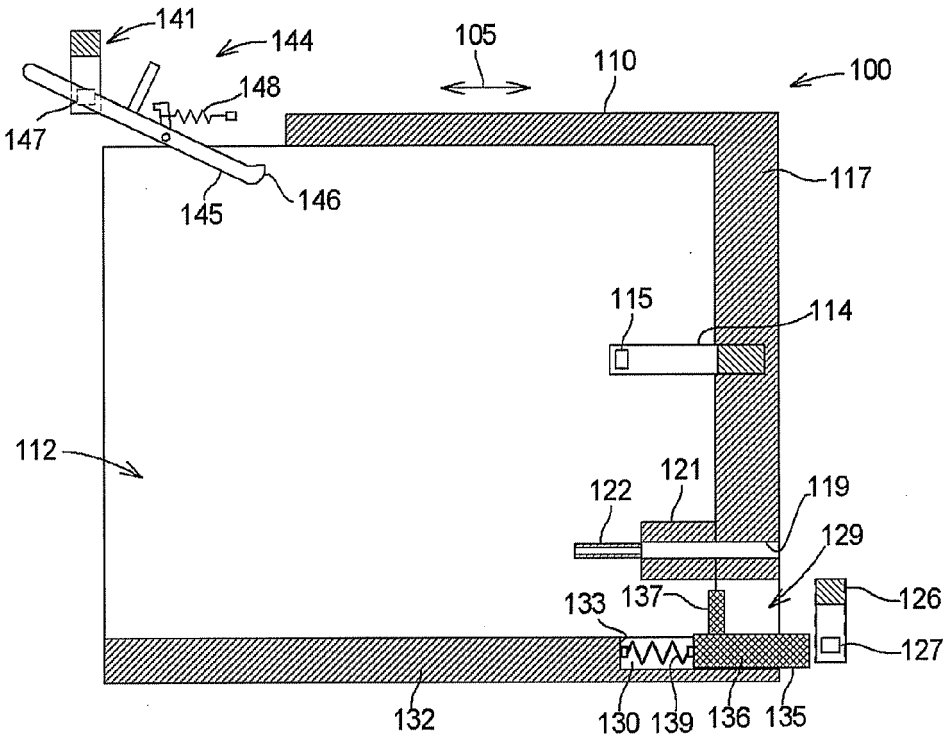
141
144
105
110
100
148
147
146
145
117
115
114
112
121
122
119
129
133
137
126
127
132
130
139
136
135

Fig.3A

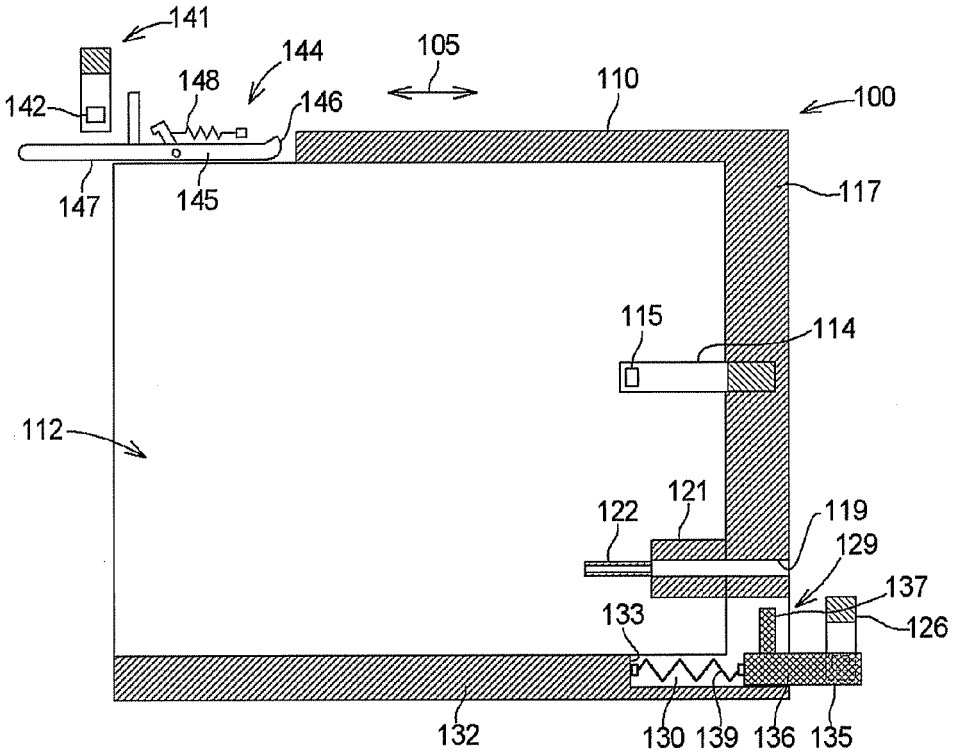
141
144
105
148
142
146
110
100
147
145
117
115
114
112
121
122
119
129
137
133
126
132
130
139
136
135

Fig.3B

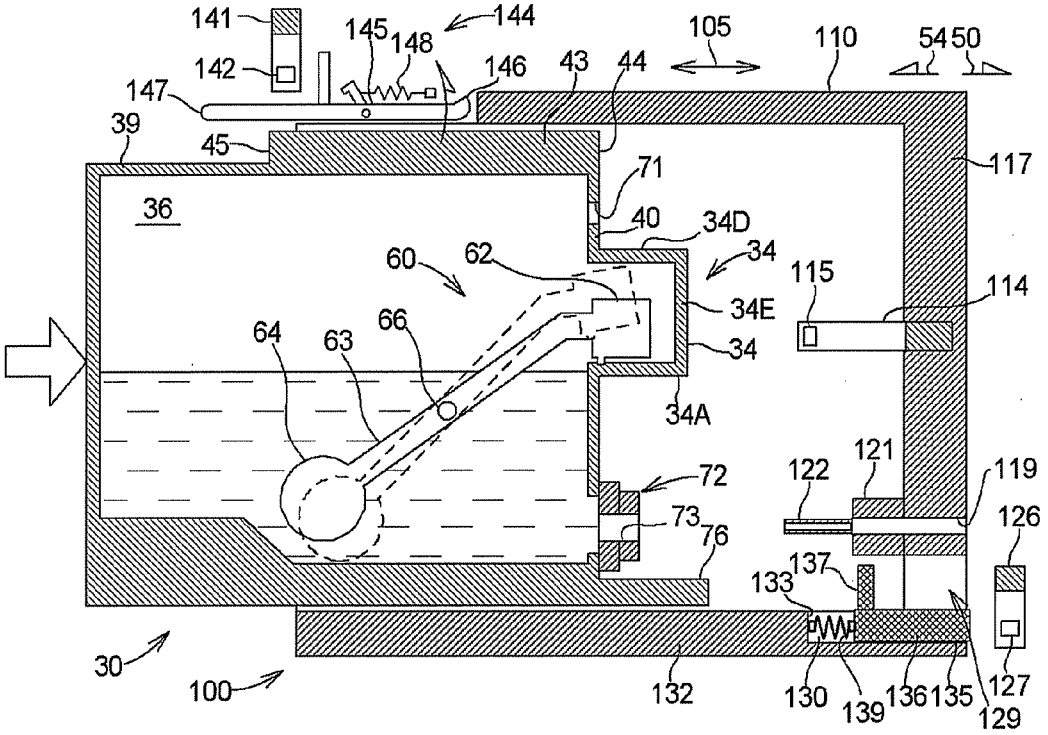
141
142
145
148
144
146
43
44
105
110
54
50
147
39
45
117
71
36
40
34D
34
60
62
115
114
34E
64
63
66
34
34A
121
122
119
72
126
73
76
137
133
30
100
132
130
139
136
135
127
129

Fig.4A

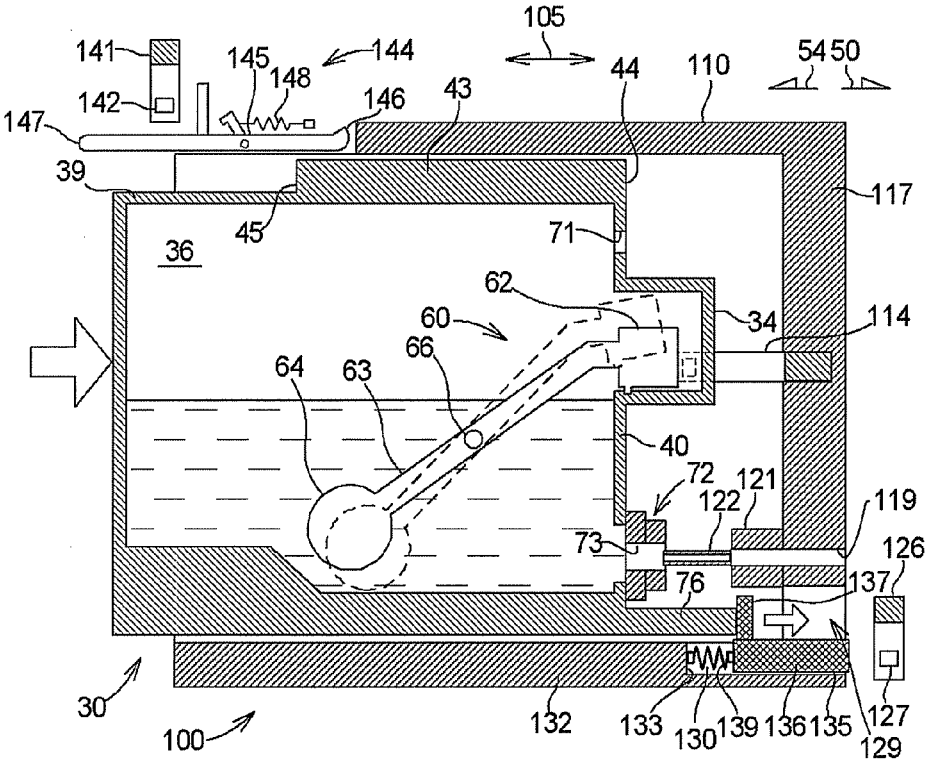
105
141
145
148
144
146
43
44
110
54
50
142
147
39
117
45
71
36
62
34
114
60
66
64
63
40
72
121
122
119
73
126
76
137
30
100
132
133
130
139
136
135
127
129

Fig.4B

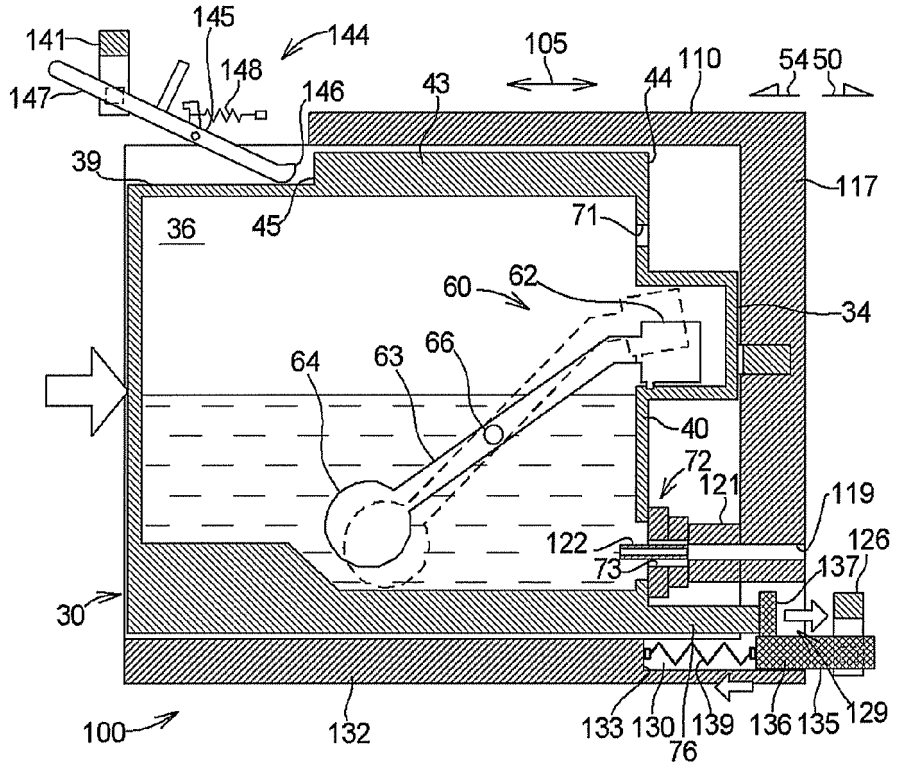
141
145
144
148
147
146
43
105
44
110
54
50
39
117
36
45
71
60
62
34
64
63
66
40
72
121
119
122
126
73
137
30
132
133
130
139
136
135
129
76
100

Fig.5A

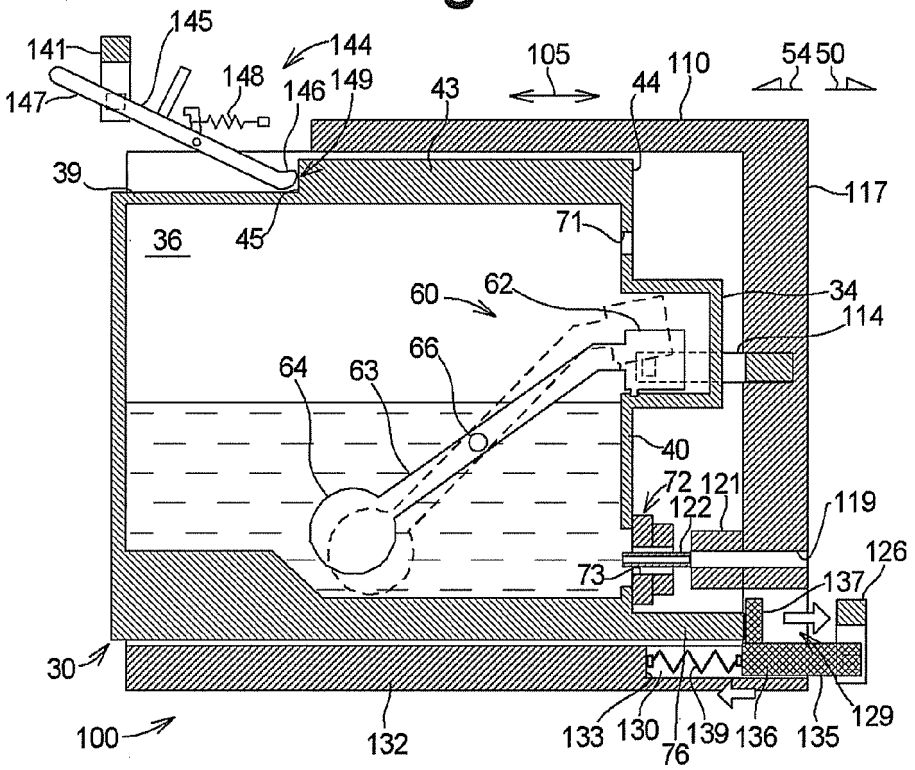
141
145
144
148
147
146
149
43
105
44
110
54
50
39
117
36
45
71
60
62
34
114
64
63
66
40
72
121
122
119
126
73
137
30
132
133
130
139
136
135
129
76
100

Fig.5B

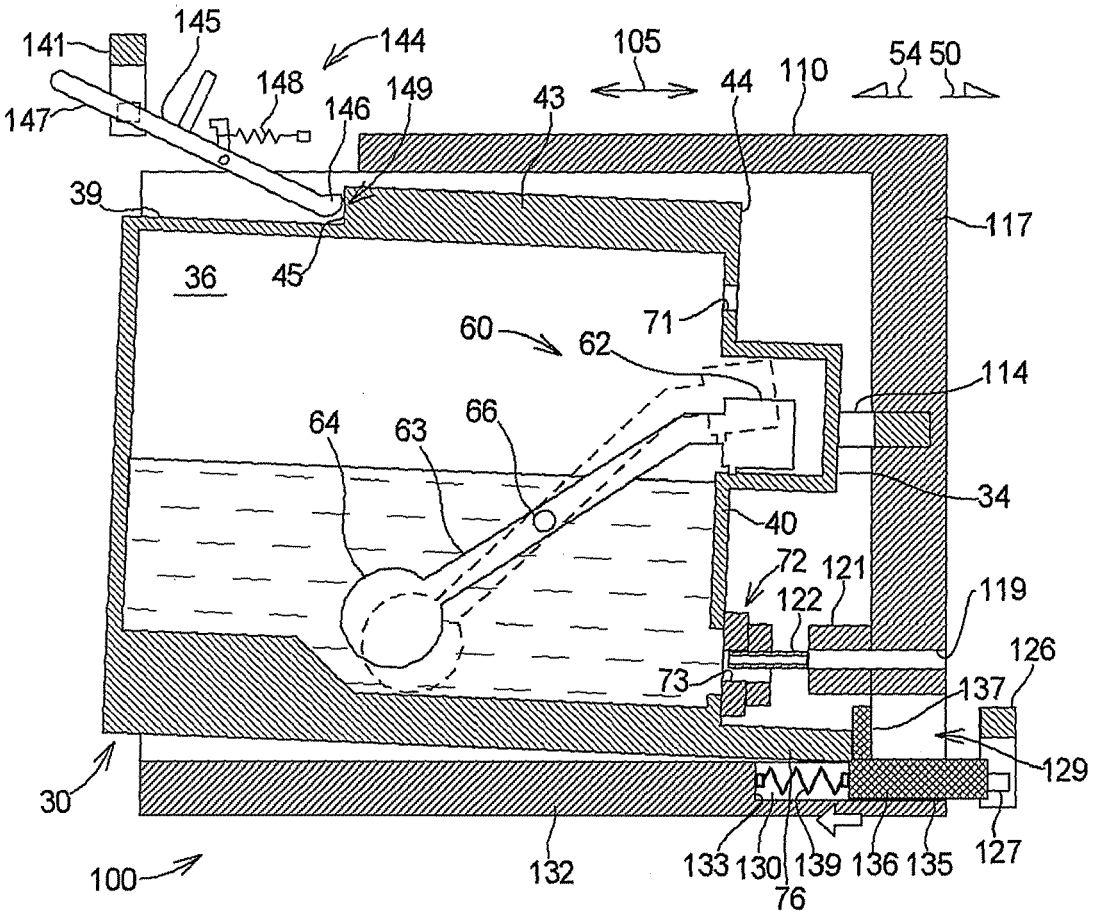
141
145
144
148
149
146
147
105
44
110
54 50
43
39
117
36
45
60
62
71
114
64
63
66
34
40
72
121
122
119
126
73
137
129
30
132
133
130
139
136
135
127
76
100

Fig.6

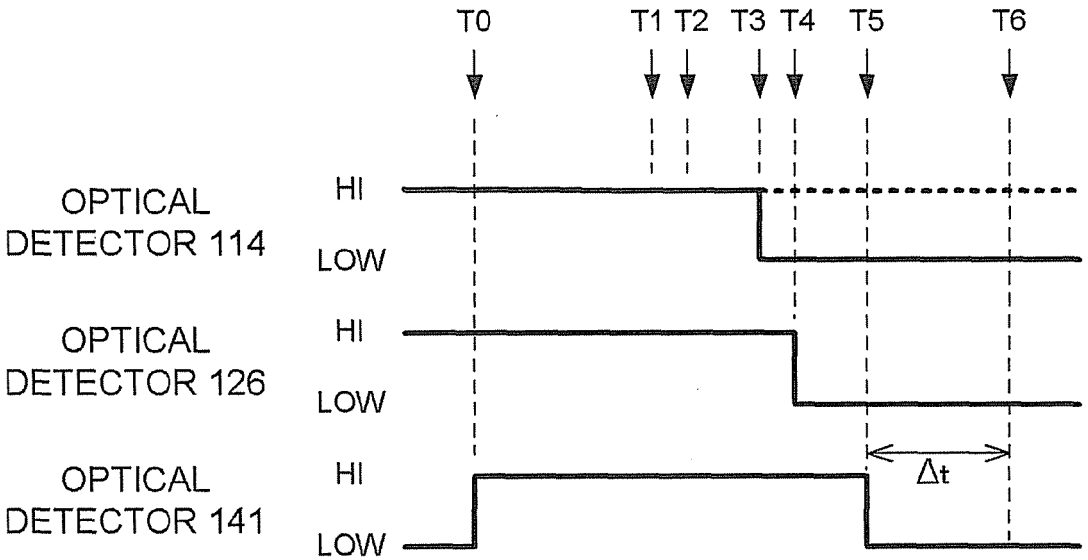
T0
T1 T2
T3 T4
T5
T6
OPTICAL DETECTOR 114
HI
LOW
OPTICAL DETECTOR 126
HI
LOW
OPTICAL DETECTOR 141
HI
LOW
Δt

Fig.7A

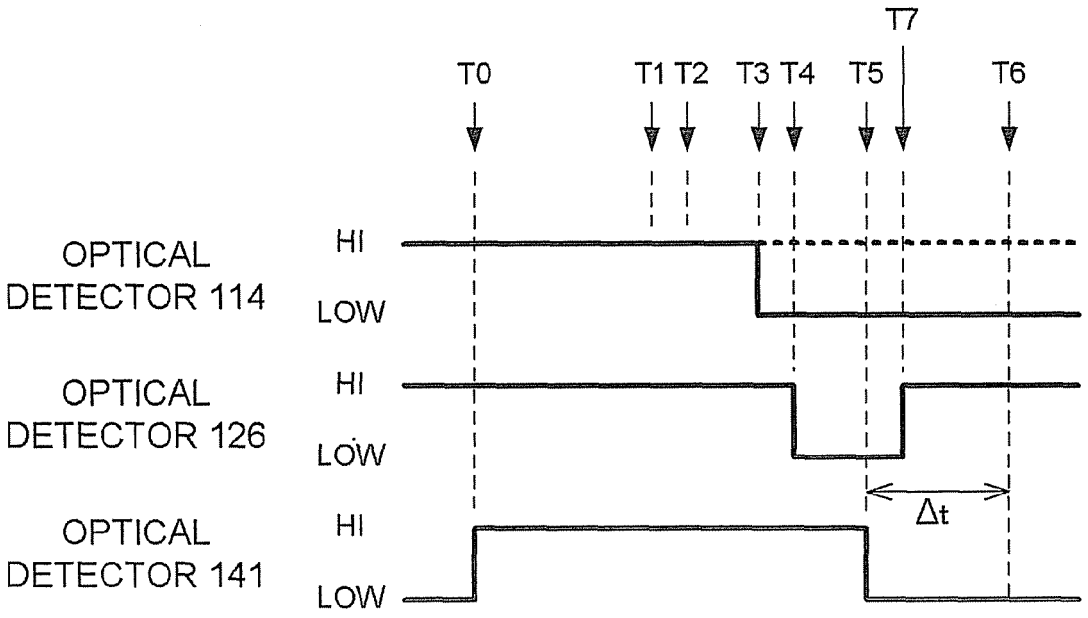
T7
T0
T1 T2
T3 T4
T5
T6
OPTICAL DETECTOR 114
HI
LOW
OPTICAL DETECTOR 126
HI
LOW
OPTICAL DETECTOR 141
HI
LOW
Δt

Fig.7B

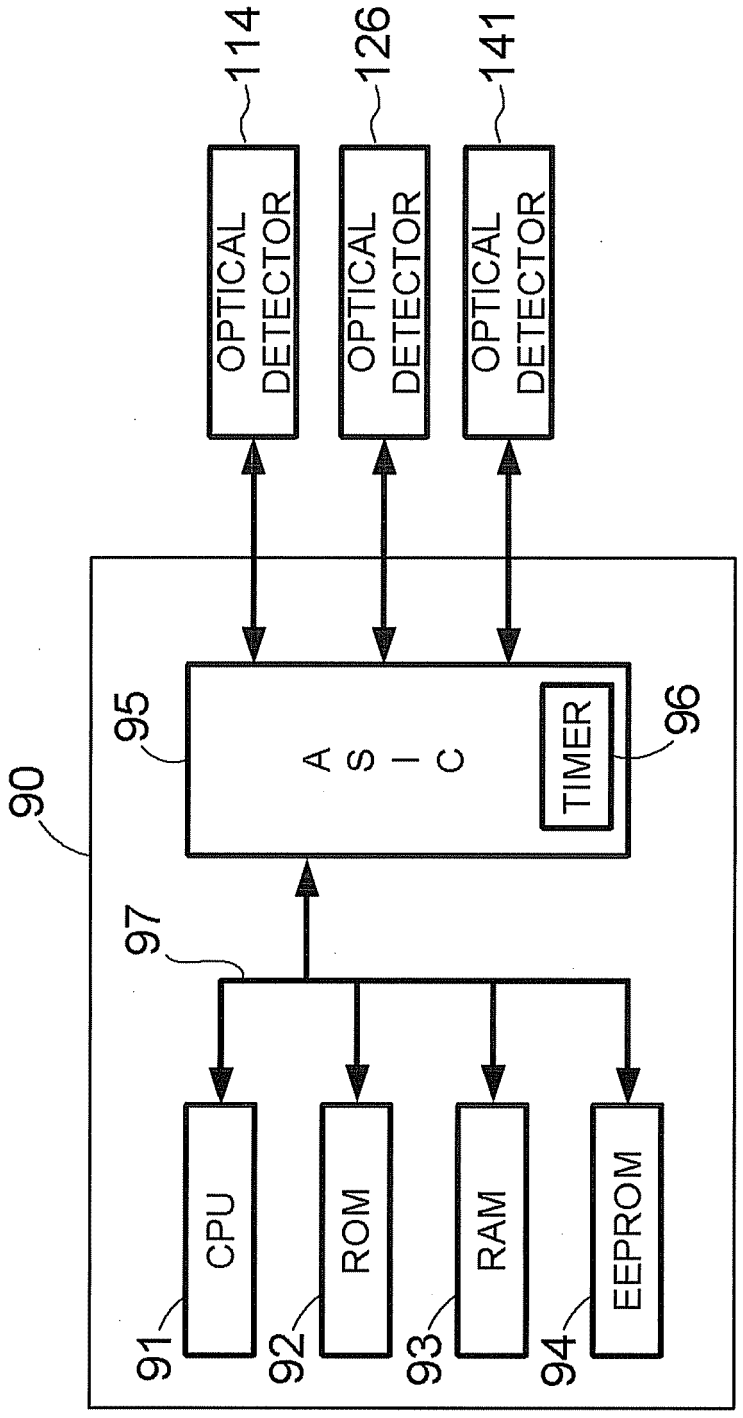
114
126
141
OPTICAL DETECTOR
OPTICAL DETECTOR
OPTICAL DETECTOR
90
95
A S I C
TIMER
96
97
CPU
ROM
RAM
EEPROM
91
92
93
94

Fig.8

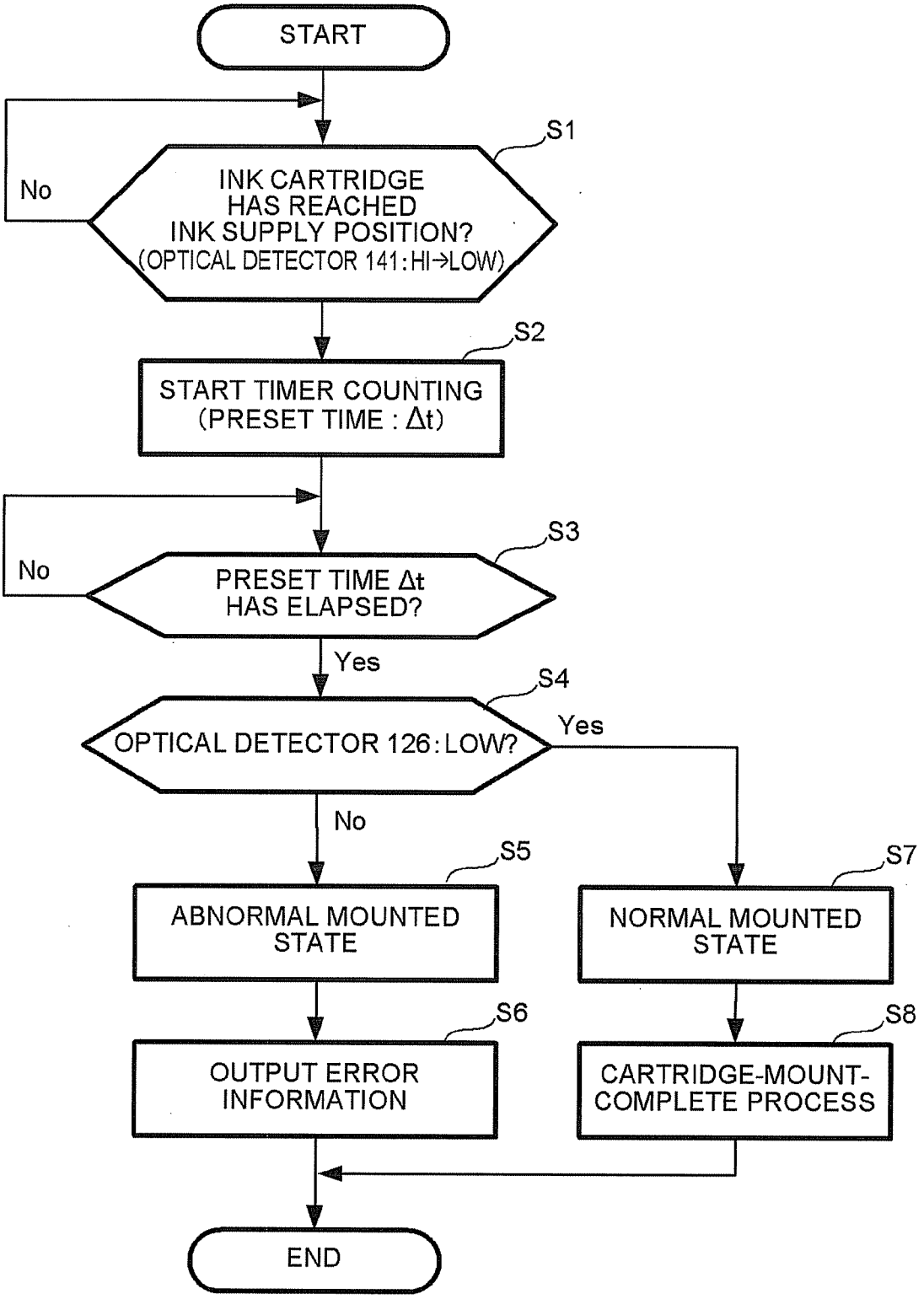
START
S1
No
INK CARTRIDGE HAS REACHED INK SUPPLY POSITION? (OPTICAL DETECTOR 141: HI→LOW)
S2
START TIMER COUNTING (PRESET TIME : Δt)
S3
No
PRESET TIME Δt HAS ELAPSED?
Yes
S4
OPTICAL DETECTOR 126: LOW?
Yes
No
S5
ABNORMAL MOUNTED STATE
S7
NORMAL MOUNTED STATE
S6
OUTPUT ERROR INFORMATION
S8
CARTRIDGE-MOUNT-COMPLETE PROCESS
END

Fig.9

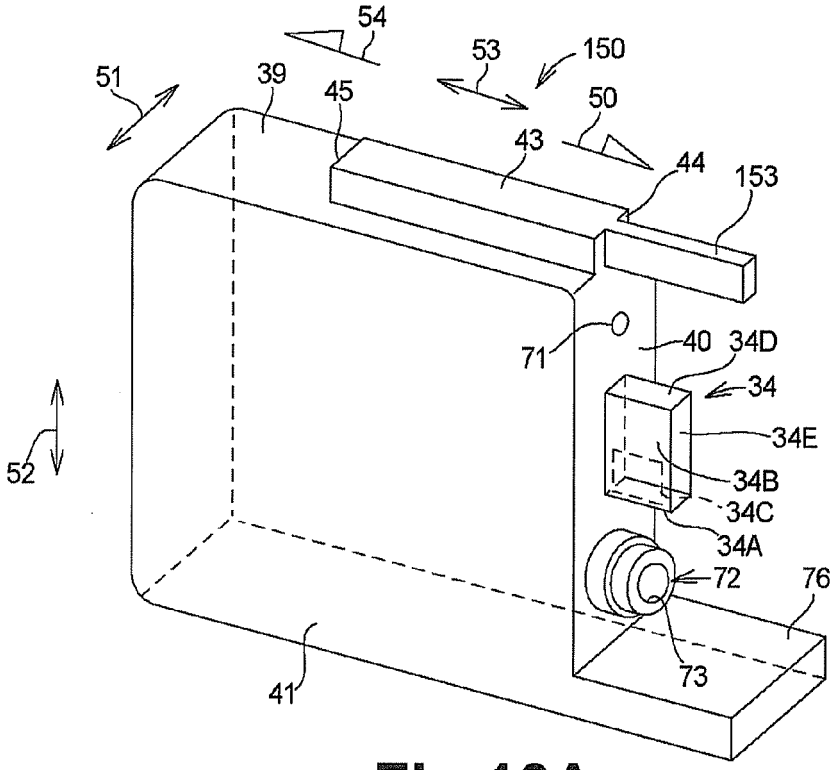

Fig.10A

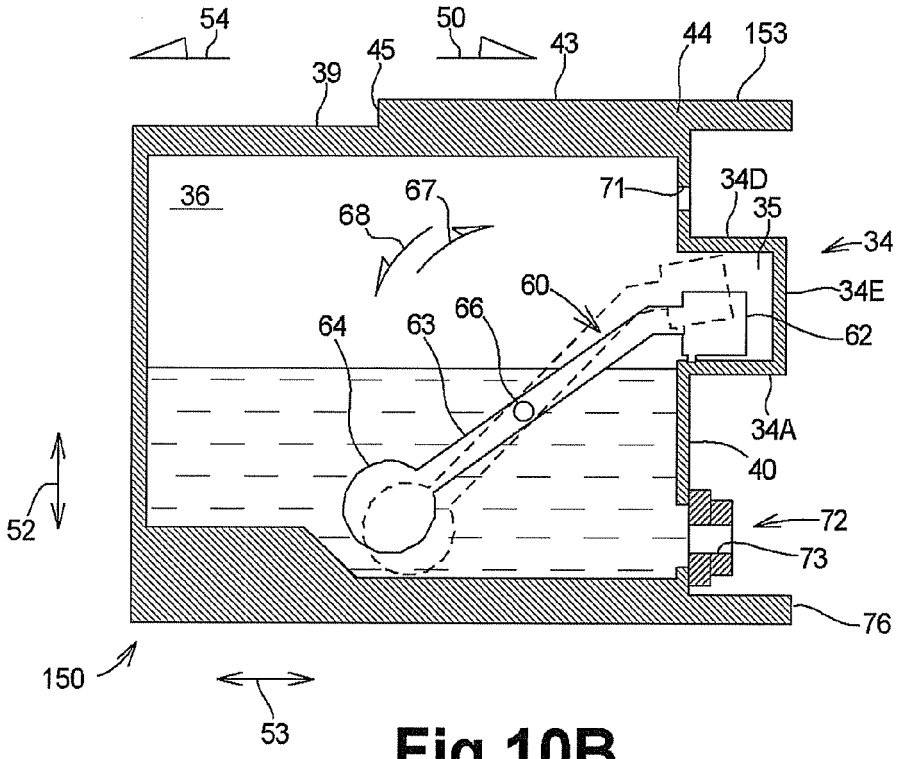

Fig.10B

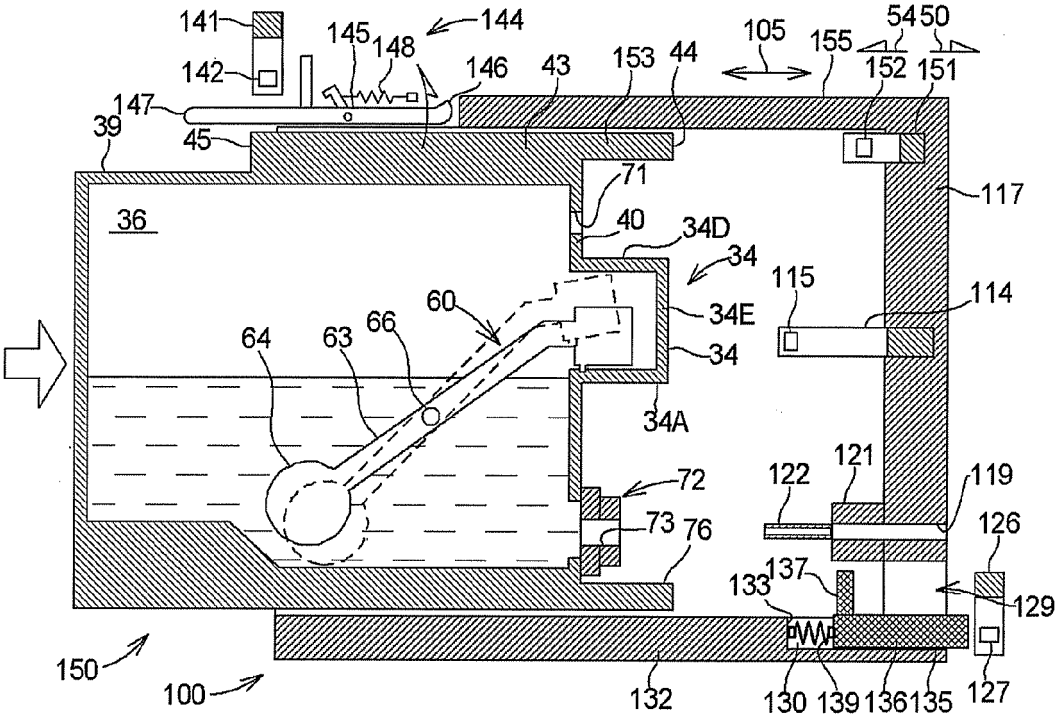

Fig.11A

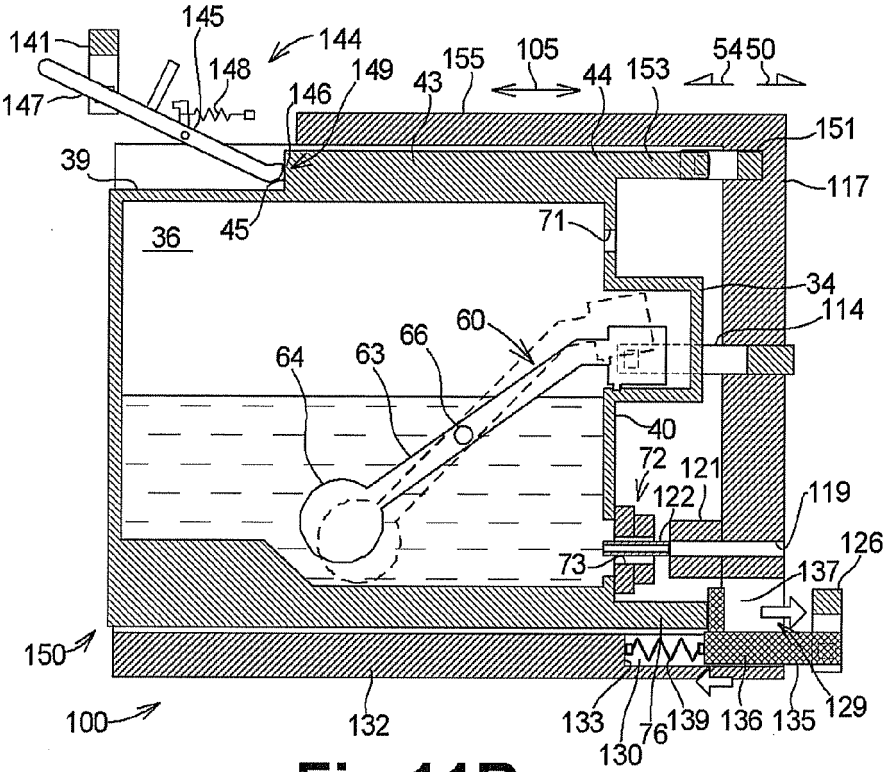

Fig.11B

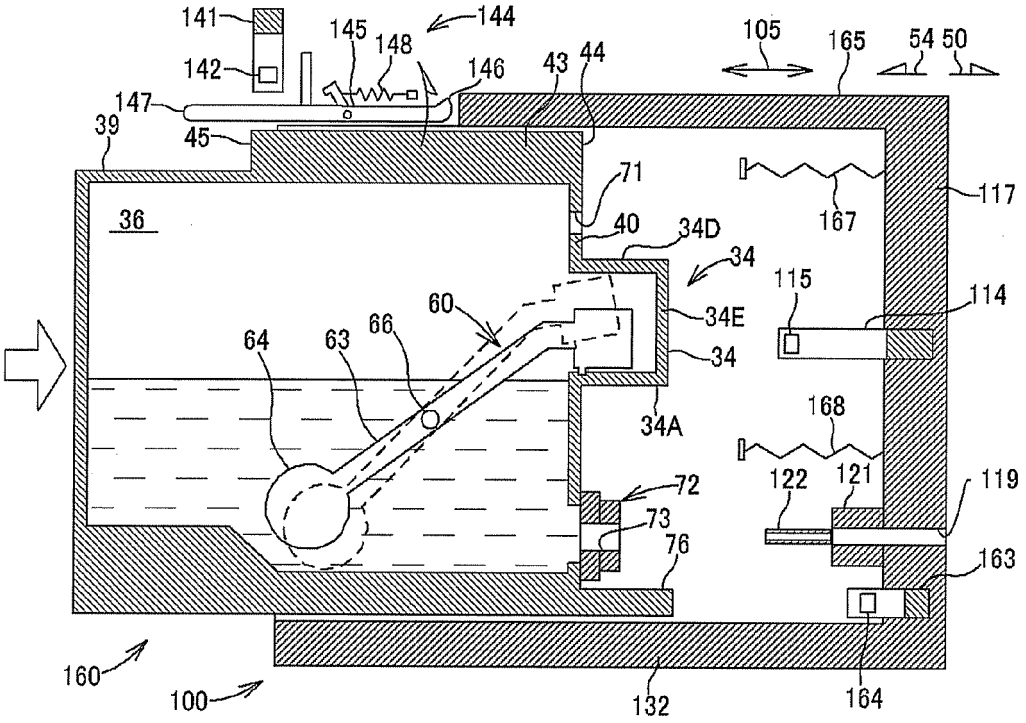

Fig.12A

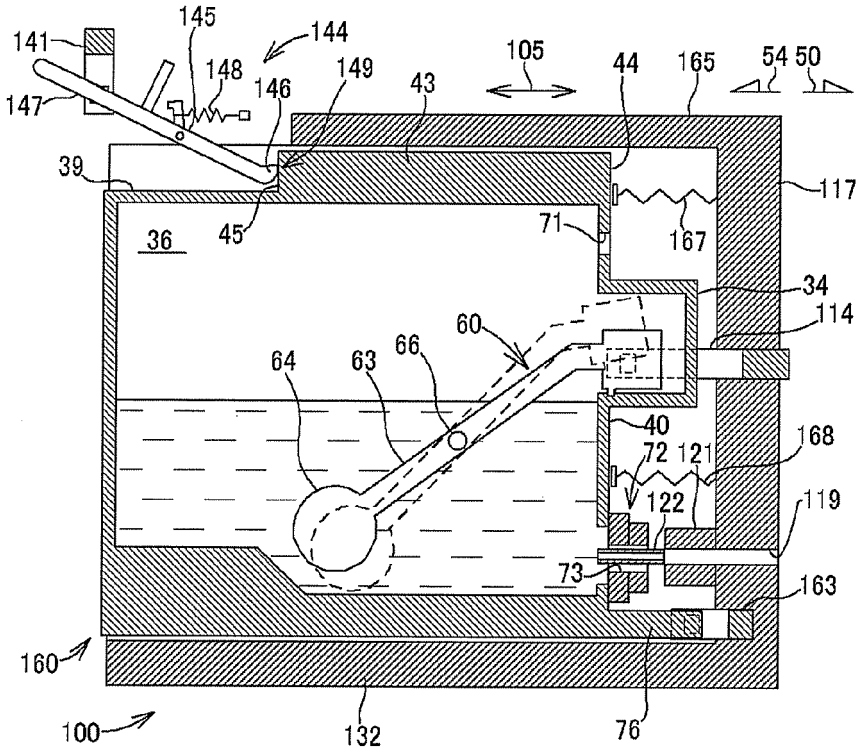

Fig.12B

Europäisches Patentamt
European Patent Office
Office européen des brevets

EUROPEAN SEARCH REPORT

Application Number
EP 10 15 6492

DOCUMENTS CONSIDERED TO BE RELEVANT

Category	Citation of document with indication, where appropriate, of relevant passages	Relevant to claim	CLASSIFICATION OF THE APPLICATION (IPC)
X	EP 1 241 011 A2 (SEIKO EPSON CORP [JP]) 18 September 2002 (2002-09-18) * paragraph [0098]; figure 17 * * paragraph [0107]; figures 21A, 21B *	1-15	INV. B41J2/175
X	US 6 767 075 B1 (TAKADA SHINGO [JP] ET AL) 27 July 2004 (2004-07-27) * column 6, line 57 - column 7, line 3; figures 8a-8c * * column 8, line 23 - line 35; figure 18 * * column 8, line 46 - line 54; figures 20a, 20b *	1-15	
X	US 2007/019010 A1 (KATADA MASAHITO [JP]) 25 January 2007 (2007-01-25) * paragraphs [0041] - [0044]; figures 2, 3a *	1-15	
X	EP 0 412 459 A2 (CANON KK [JP]) 13 February 1991 (1991-02-13) * figure 19a * * figure 21 * * figures 30a, 30b *	1-15	TECHNICAL FIELDS SEARCHED (IPC) B41J
X	US 2007/279464 A1 (HARAZIM EUGEN [DE]) 6 December 2007 (2007-12-06) * paragraph [0074]; figures 5a-5d *	1-15	
X	EP 0 955 169 A2 (CANON KK [JP]) 10 November 1999 (1999-11-10) * paragraphs [0055], [0 56], [0 63]; figures 6, 8, 11a *	1,9	
X,P	US 2009/244166 A1 (SUGAHARA HIROTO [JP]) 1 October 2009 (2009-10-01) * paragraph [0079]; figure 2 *	1,9	

The present search report has been drawn up for all claims

Place of search	Date of completion of the search	Examiner
The Hague	18 June 2010	Adam, Emmanuel

CATEGORY OF CITED DOCUMENTS

X : particularly relevant if taken alone
Y : particularly relevant if combined with another document of the same category
A : technological background
O : non-written disclosure
P : intermediate document

T : theory or principle underlying the invention
E : earlier patent document, but published on, or after the filing date
D : document cited in the application
L : document cited for other reasons

& : member of the same patent family, corresponding document

1

EPO FORM 1503 03.82 (P04C01)

ANNEX TO THE EUROPEAN SEARCH REPORT ON EUROPEAN PATENT APPLICATION NO. EP 10 15 6492

This annex lists the patent family members relating to the patent documents cited in the above-mentioned European search report. The members are as contained in the European Patent Office EDP file on
The European Patent Office is in no way liable for these particulars which are merely given for the purpose of information.

18-06-2010

Patent document cited in search report	Publication date	Patent family member(s)	Publication date
EP 1241011 A2	18-09-2002	AT 337918 T	15-09-2006
		CN 1375400 A	23-10-2002
		DE 60214264 T2	12-07-2007
		ES 2271134 T3	16-04-2007
		JP 2002273911 A	25-09-2002
		KR 20020073446 A	26-09-2002
		PT 1241011 E	29-12-2006
		US 2002140759 A1	03-10-2002
US 6767075 B1	27-07-2004	CN 1344208 A	10-04-2002
		DE 60035868 T2	06-03-2008
		EP 1177904 A1	06-02-2002
		WO 0054974 A1	21-09-2000
		JP 2000263806 A	26-09-2000
US 2007019010 A1	25-01-2007	JP 2007030227 A	08-02-2007
EP 0412459 A2	13-02-1991	AT 361838 T	15-06-2007
		AT 173677 T	15-12-1998
		AT 187126 T	15-12-1999
		AT 227649 T	15-11-2002
		AT 213999 T	15-03-2002
		AT 311985 T	15-12-2005
		AU 648985 B2	12-05-1994
		CA 2022756 A1	06-02-1991
		CN 1491798 A	28-04-2004
		CN 1051011 A	01-05-1991
		CN 1141241 A	29-01-1997
		DE 9018060 U1	15-09-1994
		DE 69032780 D1	07-01-1999
		DE 69032780 T2	02-06-1999
		DE 69033377 D1	05-01-2000
		DE 69033377 T2	29-06-2000
		DE 69033928 D1	11-04-2002
		DE 69033928 T2	18-07-2002
		DE 69034019 D1	19-12-2002
		DE 69034019 T2	09-10-2003
		DE 69034212 T2	13-07-2006
		DE 69034240 T2	10-01-2008
		DK 0997296 T3	03-04-2006
		EP 1234675 A2	28-08-2002
		EP 0610965 A1	17-08-1994
		EP 0729836 A1	04-09-1996
		EP 0872347 A1	21-10-1998
		EP 0997296 A1	03-05-2000
		ES 2124212 T3	01-02-1999

EPO FORM P0459

For more details about this annex : see Official Journal of the European Patent Office, No. 12/82

ANNEX TO THE EUROPEAN SEARCH REPORT ON EUROPEAN PATENT APPLICATION NO. EP 10 15 6492

This annex lists the patent family members relating to the patent documents cited in the above-mentioned European search report. The members are as contained in the European Patent Office EDP file on
The European Patent Office is in no way liable for these particulars which are merely given for the purpose of information.

18-06-2010

Patent document cited in search report	Publication date	Patent family member(s)	Publication date
EP 0412459 A2		ES 2185722 T3	01-05-2003
		ES 2252908 T3	16-05-2006
		HK 1047910 A1	14-09-2007
		HK 1011647 A1	01-09-2000
		HK 1011655 A1	24-03-2000
		KR 960000542 Y1	17-01-1996
		SG 54174 A1	16-11-1998
		SG 85110 A1	19-12-2001
US 2007279464 A1	06-12-2007	DE 102006036716 B3	27-09-2007
		EP 1862314 A2	05-12-2007
EP 0955169 A2	10-11-1999	NONE	
US 2009244166 A1	01-10-2009	JP 2009241320 A	22-10-2009

EPO FORM P0459

For more details about this annex : see Official Journal of the European Patent Office, No. 12/82

REFERENCES CITED IN THE DESCRIPTION

This list of references cited by the applicant is for the reader's convenience only. It does not form part of the European patent document. Even though great care has been taken in compiling the references, errors or omissions cannot be excluded and the EPO disclaims all liability in this regard.

Patent documents cited in the description

- JP 2008246999 A **[0003]**