(19) Europäisches Patentamt
European Patent Office
Office européen des brevets

(11) EP 1 903 191 B1

(12) **EUROPEAN PATENT SPECIFICATION**

(45) Date of publication and mention of the grant of the patent:
23.03.2011 Bulletin 2011/12

(51) Int Cl.:
F01M 11/00 *(2006.01)*

(21) Application number: **07016291.2**

(22) Date of filing: **20.08.2007**

(54) **Oil strainer structure of engine and oil return structure of engine**

Ölfilterstruktur für eine Brennkraftmaschine und Ölrückführungsstruktur für eine Brennkraftmaschine

Structure de filtre à huile et structure de retour d'huile de moteur

(84) Designated Contracting States:
DE FR GB

(30) Priority: **28.08.2006 JP 2006230199**
28.08.2006 JP 2006230200
28.08.2006 JP 2006230201
28.08.2006 JP 2006230202

(43) Date of publication of application:
26.03.2008 Bulletin 2008/13

(60) Divisional application:
10158500.8 / 2 233 707

(73) Proprietor: **HONDA MOTOR CO., LTD.**
Tokyo 107-8556 (JP)

(72) Inventor: **Koyama, Yoshiaki**
Wako-shi
Saitama 351-0193 (JP)

(74) Representative: **Trossin, Hans-Jürgen et al**
Weickmann & Weickmann
Postfach 860 820
81635 München (DE)

(56) References cited:
EP-A- 0 789 164
EP-A- 1 484 488
US-A- 4 493 295
US-A- 5 049 274
US-B1- 6 189 499
EP-A- 1 055 803
US-A- 4 224 161
US-A- 4 517 951
US-A- 5 535 643

Note: Within nine months of the publication of the mention of the grant of the European patent in the European Patent Bulletin, any person may give notice to the European Patent Office of opposition to that patent, in accordance with the Implementing Regulations. Notice of opposition shall not be deemed to have been filed until the opposition fee has been paid. (Art. 99(1) European Patent Convention).

EP 1 903 191 B1

Printed by Jouve, 75001 PARIS (FR)

Description

BACKGROUND OF THE INVENTION

FIELD OF THE INVENTION

[0001] The present invention generally relates to an oil strainer structure of an engine, the oil strainer being arranged between a balancer housing and the oil pan of the engine and supported by the balancer housing.

DESCRIPTION OF THE RELATED ART

[0002] Japanese Patent Application Laid-open No. 2001-74105 discloses an oil strainer structure of an engine in which a balancer housing is supported on a lower surface of a lower block which holds a crankshaft of the engine between itself and the cylinder block; and an oil strainer for filtering oil that is suctioned from the oil pan into the oil pump is integrally housed in the lower surface of a lower housing part of the balancer housing.

[0003] Because blowby gas leaked out of a combustion chamber into a crankcase contains oil, it is necessary to separate the oil from the blowby gas in a gas-liquid separating chamber formed in a cylinder head, return the blowby gas to an intake system, and return the oil to the oil pan.

[0004] In addressing this problem, Japanese Patent Application Laid-open No. 2003-201815 discloses an oil return structure of an engine in which a balancer housing is supported on a lower surface of a lower block joined to a lower end of a cylinder block, and an oil return passage is formed inside the cylinder block, the lower block and the balancer housing so as to return the oil from the gas-liquid separating chamber formed in the cylinder head to the oil pan.

[0005] However, in the oil strainer structure disclosed in Japanese Patent Application Laid-open No. 2001-74105, the oil strainer is integrally housed in the lower housing part of the balancer housing; and thus, the position of the oil strainer is limited to a space between the two balancer shafts, which causes the problems in that it is difficult to arrange the oil suction hole at an appropriate position, and it is difficult to secure a sufficient area of a strainer element of the oil strainer and a sufficient cross-sectional area of oil flow.

[0006] When the oil strainer and the oil return passage are integrally formed with the balancer housing, a significant limitation is imposed on flexibility in positioning of the oil suction hole of the oil strainer and positioning of the oil outlet hole of the oil return passage. Then, it is conceivable to provide the oil strainer and the oil return member (a member where an oil return passage is formed) separately from the balancer housing. In this case, however, the number of components increases in both the oil strainer and the oil return member. Thus, it is desired to minimize the increase in the number of components.

[0007] Also, when waves are formed on the liquid surface of the oil in the oil pan due to acceleration, deceleration or turn of the vehicle, air is mixed in the oil suctioned through the oil strainer, leading to a possibility that the oil pump does not normally operates. Thus, in the conventional structural arrangements, a baffle plate is provided inside the oil pan to suppress the formation of waves on the liquid surface of the oil, but this increases the number of components. Thus, it is desired to suppress the wave formation on the liquid surface of the oil without providing a dedicated baffle plate.

[0008] Further, in the oil return structure disclosed in Japanese Patent Application Laid-open No. 2003-201815, the oil outlet hole of the oil return passage directly opens in the lower surface of the balancer housing, and is located so as to be adjacent to the oil suction hole of the oil strainer formed integrally with the balancer housing. Therefore, a negative pressure is generated by suction of the oil pump in the vicinity of the oil suction hole of the oil strainer, and the negative pressure affects the oil outlet hole of the oil return passage, which may adversely affect the separation of the oil from the blowby gas in the gas-liquid separating chamber.

[0009] In order to eliminate this drawback, it is desirable that the oil outlet hole of the oil return passage is positioned away from the oil suction hole of the oil strainer, but it is difficult to freely select the position of the oil outlet hole because the oil outlet hole opens directly in the lower surface of the balancer housing.

[0010] EP-A-0 789 164 discloses an oil strainer structure according to the preamble part of claim 1. The oil strainer has a mounting flange which is fastened to a pump cover of an oil pump attached to a lower block of the engine.

[0011] Further, US 5,049,274 B discloses a fluid filter for an automobile automatic transmission, the fluid filter including a base member, a top member and a filtration media disposed between the base member and the top member. A downwardly extending leg member is supported on a floor of a fluid sump to hold the filter slightly off the floor and allow fluid to enter the filter through a hole in the base member.

SUMMARY OF THE INVENTION

[0012] The present invention has been made under the above-described circumstances, and a first object of the invention is to enable a high-performance oil strainer to be arranged in a narrow space between a balancer housing and an oil pan.

[0013] In order to achieve this object, according to the present invention, there is provided an oil strainer structure of an engine according to claim 1.

[0014] With this structural arrangement, the oil strainer is formed by joining together the die-molded lower member having the oil suction hole opening in the oil stored in the oil pan and the die-molded upper member having the oil discharge hole leading to the oil pump. When the

two members are joined together, the outer peripheral portion of the strainer element is held between the joint surfaces of the two members. The oil strainer is supported by the balancer housing. Thus, it is possible to form the oil strainer into a flat shape so as to be compactly arranged in a narrow space between the lower surface of the balancer housing and the bottom surface of the oil pan, and to also maximize an area of the strainer element to prevent clogging. Further, the lower member and the upper member, which are die-molded articles, are highly flexible in their shapes, whereby the oil suction hole and the oil discharge hole can be arranged in the most suitable positions, and the cross-sectional area of oil flow can be sufficiently secured.

[0015] According to the present invention, in addition, the oil strainer has a cross-sectional area decreasing from the oil suction hole to the oil discharge hole.

[0016] With this structural arrangement, the cross-sectional area of the oil strainer decreases from the oil suction hole to the oil discharge hole. Accordingly, the flow rate of the oil suctioned from the oil pan that flows through the oil strainer can be gradually increased, thereby minimizing resistance generated by the suction of oil into the oil pump.

[0017]

[0018] The above and other objects, features and advantages of the invention will become apparent from preferred embodiments taken in conjunction with the accompanying drawings.

BRIEF DESCRIPTION OF THE DRAWINGS

[0019]

Figs. 1 to 9 show a first embodiment of the invention, wherein

Fig. 1 is a front view of an engine;

Fig. 2 is a cross-sectional view taken along line 2-2 of Fig. 1;

Fig. 3 is a view in direction of arrow 3-3 of Fig. 2;

Fig. 4 is a view in direction of arrow 4-4 of Fig. 2;

Fig. 5 is a cross-sectional view taken along line 5-5 of Fig. 3;

Fig. 6 is a cross-section taken along line 6-6 of Fig. 3;

Fig. 7 is an exploded perspective view of an oil strainer viewed from obliquely below;

Fig. 8 is an exploded perspective view of the oil strainer viewed from obliquely above; and

Fig. 9 is a perspective view of a balancer device equipped with the oil strainer.

Fig. 10 is a view corresponding to Fig. 8 according to a second embodiment of the invention.

DESCRIPTION OF THE PREFERRED EMBODIMENTS

[0020] A first embodiment of the present invention will be described with reference to Figs. 1 to 9.

[0021] Figs. 1 and 2 show the following structural arrangement. A lower block 12 is fixed to a lower surface of a cylinder block 11 of a diesel engine E of an automobile. An oil pan 13 is fixed to the lower surface of the lower block 12. Provided on a lower surface of the lower block 12 is a balancer device 14 which reduces secondary vibration of the engine E, and which is housed in the oil pan 13. A crankshaft 15 is rotatably supported between the cylinder block 11 and the lower block 12. A drive sprocket 16 is provided at an end of the crankshaft 15. A driven sprocket 17 is provided at an end of a drive balancer-shaft 29 of the balancer device 14. An endless chain 18 is wound around the drive and driven sprockets 16 and 17.

[0022] Figs. 3 to 6 show the following structural arrangement. The balancer device 14 has a balancer housing 19 including an upper housing part 20 and a lower housing part 21. The upper and lower housing parts 20 and 21 are joined together by a plurality of bolts 22. A right-side housing part 23 is joined to the balancer housing 19 on an end face on the right side of the vehicle. A left-side housing part 25 is joined to the balancer housing 19 on an end face on the left side of the vehicle. The balancer housing 19 is fixed to the lower surface of the lower block 12 with two bolts 27 and 27 penetrating the upper and lower housing parts 20 and 21, and with another two bolts 28 and 28 penetrating the right-side housing part 23.

[0023] The balancer housing 19 supports the drive balancer-shaft 29 and a driven balancer-shaft 30 which are parallel to each other. Provided on the drive balancer-shaft 29 are the driven sprocket 17, a drive gear 31, a first balancer-weight 32 and a second balancer-weight 33, sequentially from one end to the other end of the drive balancer-shaft 29. Provided on the driven balancer-shaft 30 are a driven gear 34, a first balancer-weight 35 and a second balancer-weight 36, sequentially from one end to the other end of the driven balancer-shaft 30. The endless chain 18 is wound around the drive sprocket 16 provided on the crankshaft 15 and the driven sprocket 17 provided on the drive balancer-shaft 29. The drive gear 31 provided on the drive balancer-shaft 29 meshes with the driven gear 34 provided on the driven balancer-shaft 30.

[0024] Accordingly, when the engine E operates, the rotation of the crankshaft 15 is transmitted to the drive balancer-shaft 29 via the drive sprocket 16, the endless chain 18 and the driven sprocket 17; and the rotation of the drive balancer-shaft 29 is transmitted to the driven balancer-shaft 30 via the drive gear 31 and the driven gear 34. In this structural arrangement, the number of teeth of the drive sprocket 16 on the crankshaft 15 is set at twice the number of the teeth of the driven sprocket 17 on the drive balancer-shaft 29, while the drive and driven gears 31 and 34 have the same number of teeth. Consequently, the drive and driven balancer-shafts 29 and 30 rotate in directions opposite to each other, at the same rotational speed that is twice the rotational speed of the crankshaft 15, so that the first and second balancer

weights 32, 33: 35, 36 provided on the drive balancer-shaft 29 and the driven balancer-shaft 30 reduce the secondary vibration in the engine E.

[0025] Fig. 6 clearly shows the following structure. An oil pump 37, which is a trochoidal pump, has a circular-shaped pump chamber 23a which opens in the joint surface of the right-side housing part 23 with respect to the upper and the lower housing parts 20 and 21. An outer rotor 38 and an inner rotor 39 are housed inside the pump chamber 23a such that they mesh with each other. A suction port 40 facing the pump chamber 23a communicates with a suction passage 41 which opens in the lower surface of the lower housing part 21. A discharge port 42 facing the pump chamber 23a communicates with a discharge passage 43 (see Fig. 3), which opens in the upper surface of the right-side housing part 23; that is, in the joint surface between the right-side housing part 23; and the lower block 12.

[0026] Next, an oil strainer 51 for filtering the oil suctioned from the oil pan 13 into the oil pump 37 will be described with reference to Figs. 4 to 9.

[0027] Figs. 7 and 8 show the following structure. The oil strainer 51 is constituted by total four members: a lower member 52, a first upper member 53 and a second upper member 54, all of which are injection-molded from a synthetic resin into a die; and a strainer element 55 made of a synthetic resin mesh.

[0028] The lower member 52 includes: a main-body portion 52a, a support-arm portion 52b, an oil-return-passage formed portion 52c and an oil-discharge-pipe portion 52d. The main-body portion 52a has a shallow container shape with an open upper surface and curved into a comma shape. The support-arm portion 52b has a plate shape extending obliquely upward from a part of the outer periphery of the main-body portion 52a. The oil-return-passage formed portion 52c has a linear shape connecting to an upper end of the support-arm portion 52b. The oil-discharge-pipe portion 52d has a pipe shape extending downward from an end of the oil-return-passage formed portion 52c. A rectangular-shaped oil suction hole 52f opens in the main-body portion 52a on one end side (wider side). A gutter-shaped groove 52g is formed in an upper surface of the oil-return-passage formed portion 52c, and communicates with the oil-discharge-pipe portion 52d. An oil outlet hole 52e opens at a bottom end of the oil-discharge-pipe portion 52d, and is located below the liquid surface of the oil stored in the oil pan 13. Therefore, the pressure fluctuation in the crankcase does not affect the intake system via the oil-return passage 58 leading to the cylinder head.

[0029] The first upper member 53 has substantially the same shape as that of the main-body portion 52a of the lower member 52, and is formed into a shallow container shape with an open lower surface. An oil discharge hole 53a is formed in the first upper member 53 on the other end side (narrower side) so as to penetrate upward the first upper member 53.

[0030] The second upper member 54 has substantially the same shape as that of the oil-return-passage formed portion 52c of the lower member 52. A gutter-shaped groove 54a is formed in the lower surface of the second upper member 54 so as to face the gutter-shaped groove 52g of the oil-return-passage formed portion 52c. An oil inlet hole 54b is formed in the second upper member 54 at an end on a side opposite to the oil-discharge-pipe portion 52d. Mounting bosses 54c and 54d each having a bolt-hole are projectingly formed on opposite sides of the oil inlet hole 54b.

[0031] The lower surfaces of the first and second upper members 53 and 54 are respectively joined by fusing to the upper surfaces of the main-body portion 52a and the oil-return-passage formed portion 52c. In this process, the outer peripheral portion of the strainer element 55 is held and fixed between the lower surface of the first upper member 53 and the upper surface of the main-body portion 52a of the lower member 52. As a result, a dirty chamber 56 is defined between the strainer element 55 and the main-body portion 52a of the lower member 52, and a clean chamber 57 is defined between the strainer element 55 and the first upper member 53. The oil return passage 58 is formed between the groove 52g in the oil-retum-passage formed portion 52c of the lower member 52 and the groove 54a of the second upper member 54. The opposite ends of the oil return passage 58 communicate with the oil inlet hole 54b and the oil-discharge-pipe portion 52d.

[0032] The oil strainer 51 comprises the lower member 52, the first upper member 53 and the second upper member 54, all of which are synthetic resin die-molded articles, and thus has a high flexibility in designing the shape. Accordingly, the compact high-performance oil strainer 51 can be arranged in the narrow space between the balancer housing 19 and the oil pan 13. More particularly, in the oil suction route to the oil pump 37, the oil suction hole 52f and the oil discharge hole 53a can be arranged in the most suitable positions, and the cross-sectional area of oil flow can be sufficiently secured. Also, in the oil returning route for returning the oil separated from the blowby gas, the oil outlet hole 52e can be arranged in a position sufficiently away from the oil suction hole 52f, and can be kept below the liquid surface of the oil.

[0033] As clearly shown in Fig. 4, the oil strainer 51 structured as described above is fastened to the lower housing part 21 of the balancer housing 19 with three bolts 59 penetrating from below the bolt-holes of the three mounting bosses 53b, 53c and 53d of the first upper member 53, and is fastened to the upper housing part 20 of the balancer housing 19 with two bolts 60 and 60 penetrating from above the bolt-holes of the two mounting bosses 54c and 54d of the second upper member 54. In this structural arrangement, the two mounting bosses 54c and 54d of the second upper member 54 are fixed to the end portion of the upper housing part 20 on the drive balancer-shaft 29 side; the mounting bosses 53b and 53c of the first upper member 53 are fixed to the

lower housing part 21 on the driven balancer-shaft 30 side; and the remaining mounting boss 53d of the first upper member 53 is fixed to the lower housing part 21 between the drive balancer-shaft 29 and the driven balancer-shaft 30. Consequently, the oil strainer 51 is supported at a position so as to cover the lower surface of the lower housing part 21.

[0034] In the above-described mounted state, the oil discharge hole 53a of the first upper member 53 communicates, through the suction passage 41 opening in the lower surface of the lower housing part 21, with the suction port 40 of the oil pump 37 (see Fig. 6). Also, the oil inlet hole 54b of the second upper member 54 communicates, through an oil return passage 20a opening in the lower surface of the upper housing part 20, with the oil return passage 23b which opens in the joint surface of the right-side housing part 23 with respect to the lower block 12 (see Fig. 9). The oil return passage 23b of the right-side housing part 23 communicates, through another oil return passage (not illustrated) penetrating the lower block 12 and the cylinder block 11, with a labyrinth-type gas-liquid separating chamber (not illustrated) formed in the cylinder head.

[0035] Next, the operation of the first embodiment of the present invention will be described.

[0036] When the engine E operates, the rotation of the crankshaft 15 is transmitted to the drive balancer-shaft 29 via the endless chain 18, and the rotation of the drive balancer-shaft 29 is transmitted to the driven balancer-shaft 30 via the drive and driven gears 31 and 34. Thus, the oil pump 37 connected to the driven balancer-shaft 30 starts to operate.

[0037] As a result, the oil stored in the oil pan 13 is suctioned into the oil strainer 51 through the oil suction hole 52f formed in the lower member 52 of the oil strainer 51; passes from the dirty chamber 56 through the strainer element 55 while being filtered thereby; passes from the clean chamber 57 through the oil discharge hole 53a of the first upper member 53; and further passes through the suction passage 41 of the lower housing part 21 of the balancer housing 19 (see Figs. 3 and 6) and the suction port 40 of the right-side housing part 23, and is suctioned into the oil pump 37.

[0038] The oil discharged to the discharge port 42 of the oil pump 37 is supplied from the discharge passage 43 of the right-side housing part 23 (see Fig. 3) to the lower block 12, and then branches therefrom into plural routes and used to lubricate a journal portion of the crankshaft 15 and a valve operating mechanism.

[0039] The main-body portion 52a of the lower member 52 and the second upper member 54 dividing the interior of the oil strainer 51 into the dirty chamber 56 and the clean chamber 57, has a vertically flat shape, and the outer peripheral portion of the strainer element 55 having a large area is held between the lower member 52 and the second upper member 54. Therefore, it is possible to minimize the increase in the flow resistance of the oil, and to prevent the clogging of the strainer element 55.

[0040] As clearly shown in Figs. 7 and 8, the oil strainer 51 is made thinner on the oil suction hole 52f side and thicker on the oil discharge hole 53a side in order to avoid any interference with the bottom surface of the oil pan 13. However, the oil strainer 51 is made wider on the oil suction hole 52f side and narrower on the oil discharge hole 53a side, thereby preventing the sudden change in the cross-sectional area of oil flow to minimize the increase in the flow resistance of the oil. Particularly because the cross-sectional area of the passage of the oil strainer 51 gradually decreases from the oil suction hole 52f side to the oil discharge hole 53a side, the flow rate of the oil flowing from the oil suction hole 52f to the oil discharge hole 53a slowly increases, thereby reducing the flow resistance against the oil flowing into the oil pump 37.

[0041] The blowby gas that leaks out of the combustion chamber of the engine E is supplied to the cylinder head while containing the oil; and is subjected to the gas-liquid separation in the gas-liquid separating chamber provided in the cylinder head to separate therefrom the oil. Consequently, the gas is returned to the intake system and the oil is returned to the oil pan 13. The oil separated from the blowby gas flows down through an oil return passage (not shown) formed in the cylinder block 11 and the lower block 12; passes through the oil return passage 23b (see Figs. 3 and 9) in the right-side housing part 23 of the balancer housing 19 joined to the lower block 12 and through the oil return passage 20a (see Figs. 3 and 9) in the upper housing part 20; and flows into the oil inlet hole 54b of the second upper member 54 of the oil strainer 51 (see Figs.8 and 9).

[0042] The oil that flows flowed into the oil inlet hole 54b of the second upper member 54, passes through the oil return passage 58 formed between the oil-return-passage formed portion 52c of the lower member 52and the second upper member 54, further through the oil-discharge-pipe portion 52b of the lower member 52, and returns to the undersurface of the oil stored in the oil pan 13 through the oil outlet hole 52e located below the liquid surface of the oil in the oil pan 13.

[0043] As described above, the oil return passage 58 and the oil-discharge-pipe portion 52d for returning the oil separated from the blowby gas to the oil pan 13, are formed integrally with the oil strainer 51. Consequently, the number of components and the number of assembling steps are reduced as compared with the case where the oil return passage 58 and the oil-discharge-pipe section 52d are formed separately from the oil strainer 51.

[0044] As described above, the lower member 52 forming a part of the oil strainer 51 for filtering the oil in the oil pan 13 is also used for forming a part of the oil return member for returning the oil separated from the blowby gas to the oil pan 13. Consequently, the number of members is reduced to 3, instead of 4, in the case where no member is commonly used, thereby reducing the number of components of the oil strainer 51 and the oil return member to reduce the cost.

[0045] In addition, because the first and second upper members 53 and 54 which are joined to the balancer housing 19 are separate members, they can be high-precision parts, thereby facilitating joining them to the balancer housing 19 to suppress the leakage of oil out of the joint portion. Assuming that the first and second upper members 53 and 54 are integrated into a single member, the single member becomes large in dimensions, and also the oil discharge hole 53a and the oil inlet hole 54b are required to be formed in the single member which requires a severe dimensional accuracy in aligning the oil discharge hole 53a and the oil inlet hole 54b respectively with the suction passage 41 and the oil return passage 20a of the balancer housing 19. Therefore, this structural arrangement results in an increased processing cost.

[0046] Depending on the positional relationship between the oil suction hole 52f and the oil outlet hole 52e in the oil strainer 51, the negative pressure generated by suction of the oil pump 37 and acting on the oil suction hole 52f may affect the oil outlet hole 52e, leading to a possibility that the negative pressure adversely affects the separation of the oil from the blowby gas in the gas-liquid separation chamber leading to the oil outlet hole 52e. However, according to the present embodiment, the positional relationship between the oil suction hole 52f and the oil outlet hole 52e can be flexibly established by using the oil return passage 58 formed between the oil-return-passage formed portion 52c of the lower member 52 and the second upper member 54 so as to avoid the influence of the negative pressure generated by suction of the oil pump 37.

[0047] Further, the oil-discharge-pipe portion 52d is formed in the lower member 52 so as to project downward, and the oil outlet hole 52e opens at the bottom end of the oil-discharge-pipe portion 52d. Consequently, the pressure fluctuation in the crankcase is prevented from adversely affecting the gas-liquid separation.

[0048] Furthermore, the oil strainer 51 is supported so as to provide a bridge between the opposite end of the balancer housing 19, and partitions the space between the lower surface of the balancer housing 19 and the bottom surface of the oil pan 13. Consequently, the oil strainer 51 functions as a baffle plate for suppressing the fluctuation of the liquid surface of the oil due to acceleration, deceleration or turn of the vehicle, thereby reliably preventing cavitation in the oil pump 37 due to air mixed into the oil. Therefore, it is possible to eliminate the need to provide a dedicated baffle plate, and downsize the conventional baffle plate, thereby reducing the number of components and the cost. Particularly because the support-arm portion 52b connecting together the main-body portion 52a and the oil-return-passage formed portion 52c of the lower member 52 is formed into a plate shape, the support-arm portion 52b can effectively suppress the movement of the oil to enhance the function of the oil strainer as a baffle plate.

[0049] Next, a second embodiment of the present invention will be described with reference to Fig. 10.

[0050] In the second embodiment, a rib 53e is integrally formed on an upper surface of a first upper member 53 of an oil strainer 51 so as to project upward toward a lower surface of a lower housing part 21 of a balancer housing 19. The direction in which the rib 53e extends is substantially orthogonal to the direction in which a support-arm portion 52b of a lower member 52 extends.

[0051] Because the rib 53e is integrally formed on the first upper member 53 as described above, it is possible to enhance rigidity of the oil strainer 51, and also effectively suppress formation of waves on the liquid surface of the oil by causing the rib 53e to function as a baffle plate. Particularly because the rib 53b extends in the direction orthogonal to the direction in which the support-arm portion 52b extends, it is possible to suppress the waves regardless of the direction in which the oil moves.

[0052] The embodiments of the present invention have been described above, but various changes in design may be made without departing from the subject matter of the present invention.

[0053] For example, in the embodiments, the oil return passage 58 and the oil-discharge-pipe portion 52d for returning the oil separated from the blowby gas to the oil pan 13 are formed integrally with the oil strainer 51, but they may be formed separately from the oil strainer 51.

[0054] Also, in the above embodiments, the lower member 52, the first upper member 53 and the second upper member 54 are die-molded synthetic resin articles, but they can be die-molded metal articles (pressed products or die-cast products) or any other articles made not by die-molding.

[0055] An oil strainer 51 includes: a lower member 52 having an oil suction hole 52f opening in oil stored in an oil pan; an upper member 53 having an oil discharge hole 53a leading to an oil pump; and a strainer element 55. The lower member 52 and the upper member 53 are joined to each other with the strainer element 55 held between joint surfaces of the upper and lower members 52 and 53. Thus, it is possible to form the oil strainer 51 into a flat shape so as to be compactly arranged in a narrow space, and also maximize an area of the strainer element 55 to prevent clogging. Further, the lower member 52 and the upper member 53, which are die-molded articles, are highly flexible in their shapes, whereby the oil suction hole 52f and the oil discharge hole 53a can be arranged in the most suitable positions, and the cross-sectional area of oil flow can be sufficiently secured.

Claims

1. An oil strainer structure of an engine, comprising:

an oil strainer (51) for filtering oil in an oil pan (13), the oil strainer (51) being arranged between a balancer housing (19) and the oil pan (13) of the engine and supported by the balancer

housing (19),

characterized in that
the oil strainer (51) includes:

a lower member (52) which is a die-molded article having an oil suction hole (52f) opening in the oil stored in the oil pan (13),
an upper member (53) which is a die-molded article having an oil discharge hole (53a) leading to the oil pump (37), and
a strainer element (55),
the lower member (52) and the upper member (53) being joined to each other with an outer peripheral portion of the strainer element (55) held between joint surfaces of the upper and lower members (53, 52), wherein the oil strainer (51) has a cross-sectional area decreasing from the oil suction hole (52f) to the oil discharge hole (53a).

Patentansprüche

1. Ölfilterstruktur eines Motors, umfassend:

einen Ölfilter (51) zum Filtern von Öl in einer Ölwanne (13), wobei der Ölfilter (51) zwischen einem Ausgleichergehäuse (19) und der Ölwanne (13) des Motors angeordnet und von dem Ausgleichergehäuse (19) gehalten ist,

dadurch gekennzeichnet, dass der Ölfilter (51) enthält:

ein unteres Element (52), das ein matrizengeformter Gegenstand mit einem Ölansaugloch (52f) ist, das sich in das in der Ölwanne (13) aufbewahrte Öl öffnet,
ein oberes Element (53), das ein matrizengeformter Gegenstand mit einem Ölauslassloch (53a) ist, das zu der Ölpumpe (37) führt, und
ein Filterelement (55),
wobei das untere Element (52) und das obere Element (53) miteinander verbunden sind, wobei ein Außenumfangsabschnitt des Filterelements (55) zwischen Verbindungsflächen der oberen und unteren Elemente (53, 52) gehalten wird, wobei der Ölfilter (51) eine Querschnittsfläche hat, die von dem Ölansaugloch (52f) zu dem Ölauslassloch (53a) hin abnimmt.

Revendications

1. Structure de filtre à l'huile d'un moteur, comprenant :

un filtre à l'huile (51) pour filtrer de l'huile dans un carter d'huile (13), le filtre à l'huile (51) étant disposé entre un logement de balancier (19) et le carter d'huile (13) du moteur et supporté par le logement de balancier (19),

caractérisée en ce que
le filtre (51) inclus :

un organe inférieur (52) qui est un article moulé par filière comportant un trou d'aspiration d'huile (52f) s'ouvrant dans l'huile stockée dans le carter d'huile (13),
un organe supérieur (53) qui est un article moulé par filière comportant un trou d'évacuation d'huile (53a) conduisant à la pompe à huile (37), et
un élément de filtre (55),
l'organe inférieur (52) et l'organe supérieur (53) étant joints l'un à l'autre avec une portion périphérique externe de l'élément du filtre (55) maintenu entre des surfaces de joint des organes supérieur et inférieur (53, 52), où le filtre à l'huile (51) a une aire en coupe se réduisant du trou d'aspiration d'huile (52f) au trou d'évacuation d' huile (53a).

FIG.1

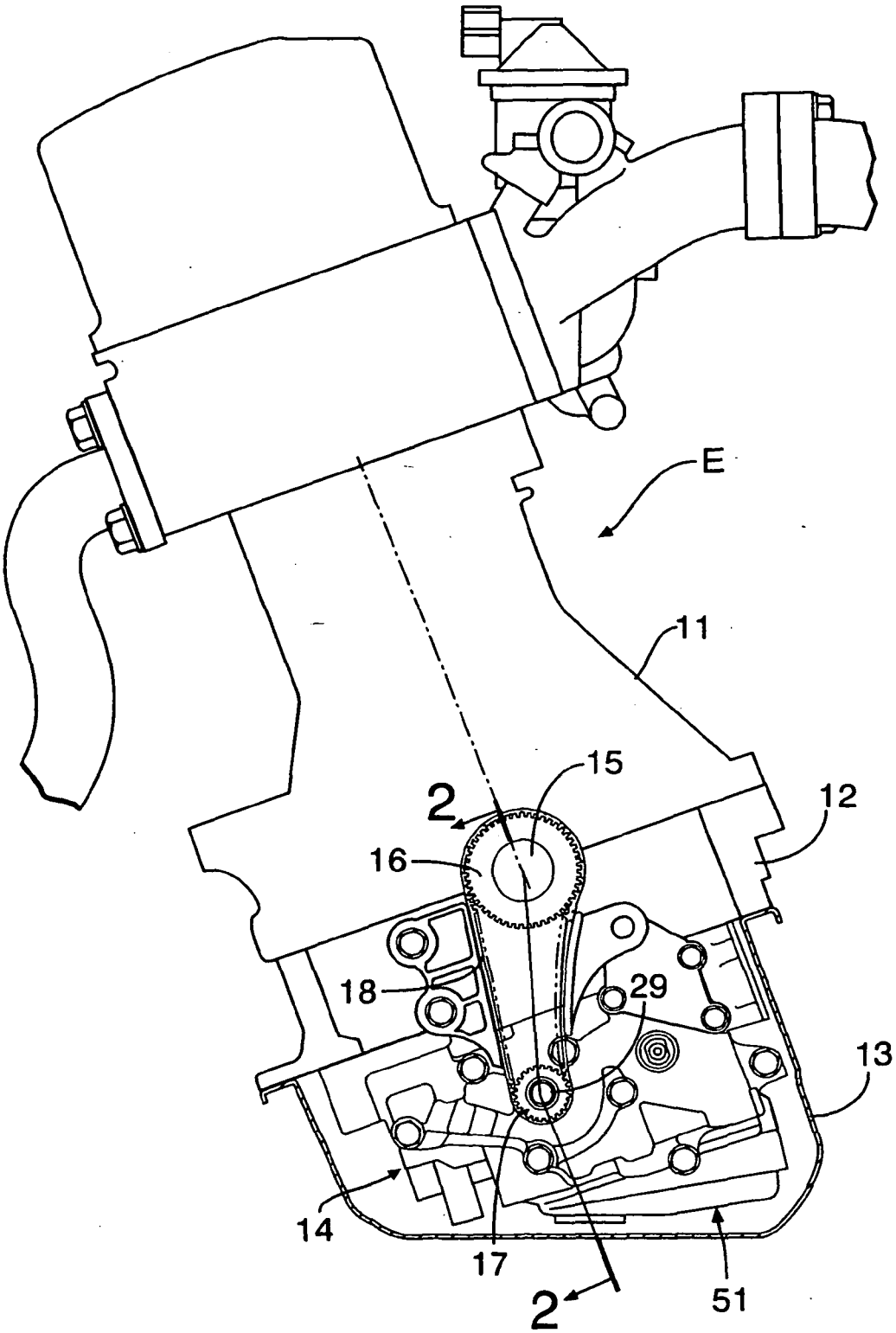

FIG.2

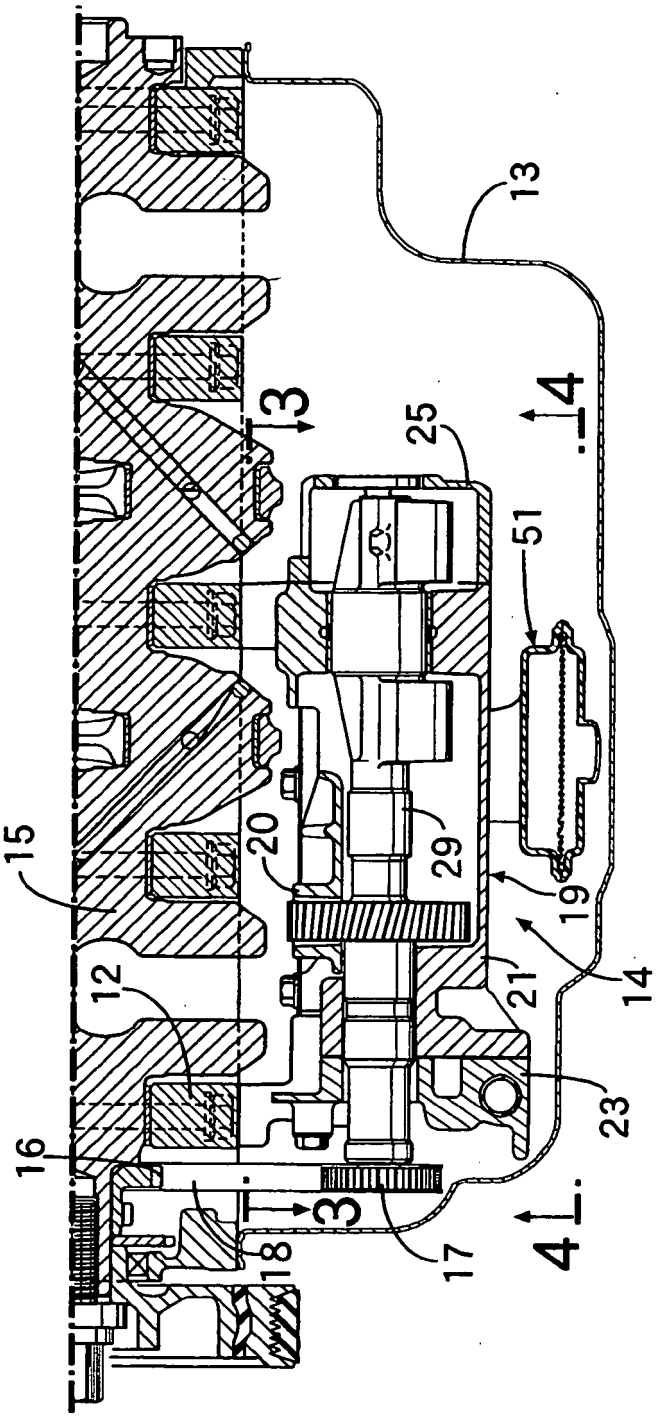

FIG.3

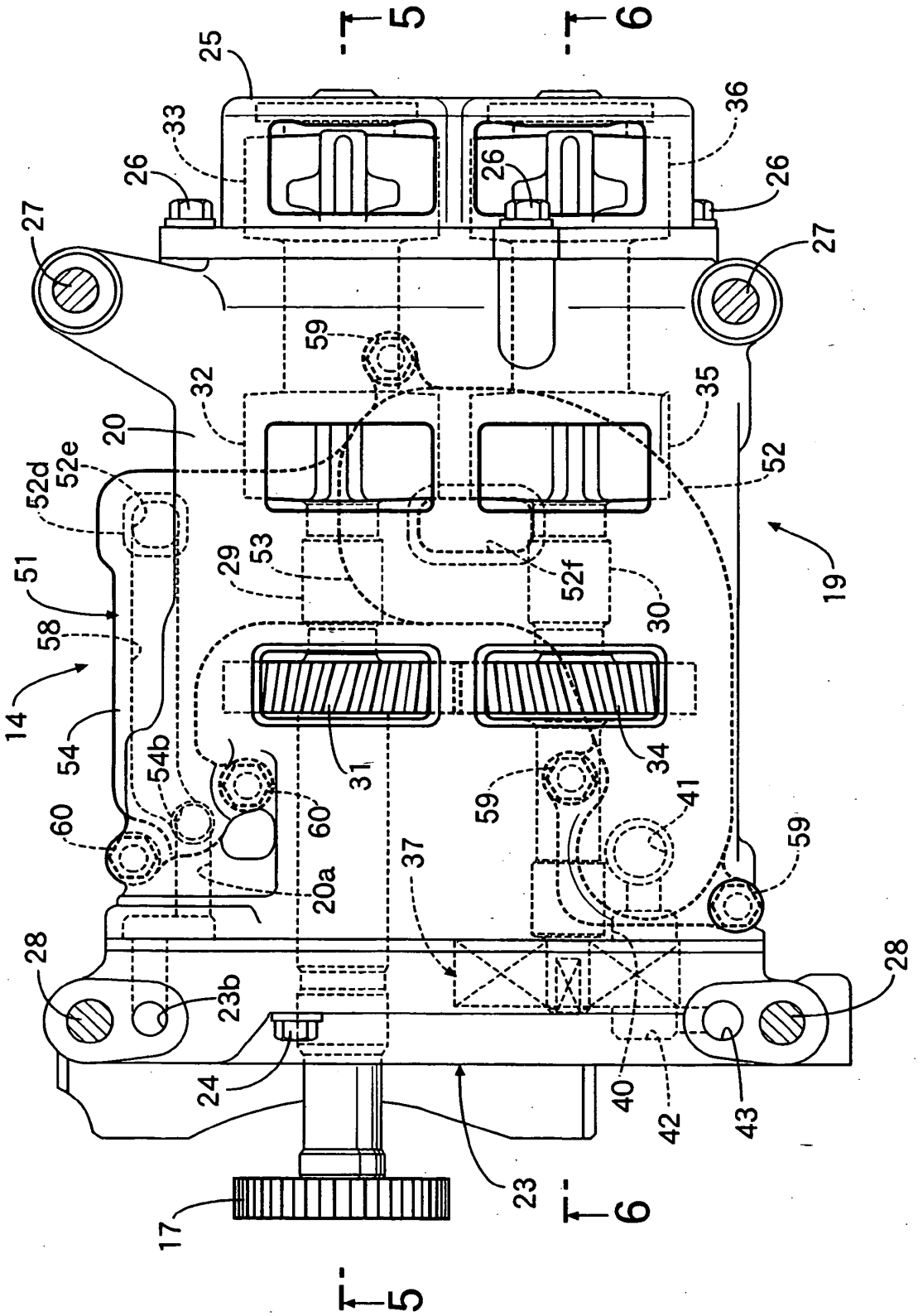
5
6
25
33
36
26
26
26
27
27
59
32
35
20
52e
52d
52
51
29
53
52f
30
19
58
14
54
54b
31
34
60
60
59
41
59
37
20a
28
23b
28
24
40
42
43
23
17
6
5

FIG.4

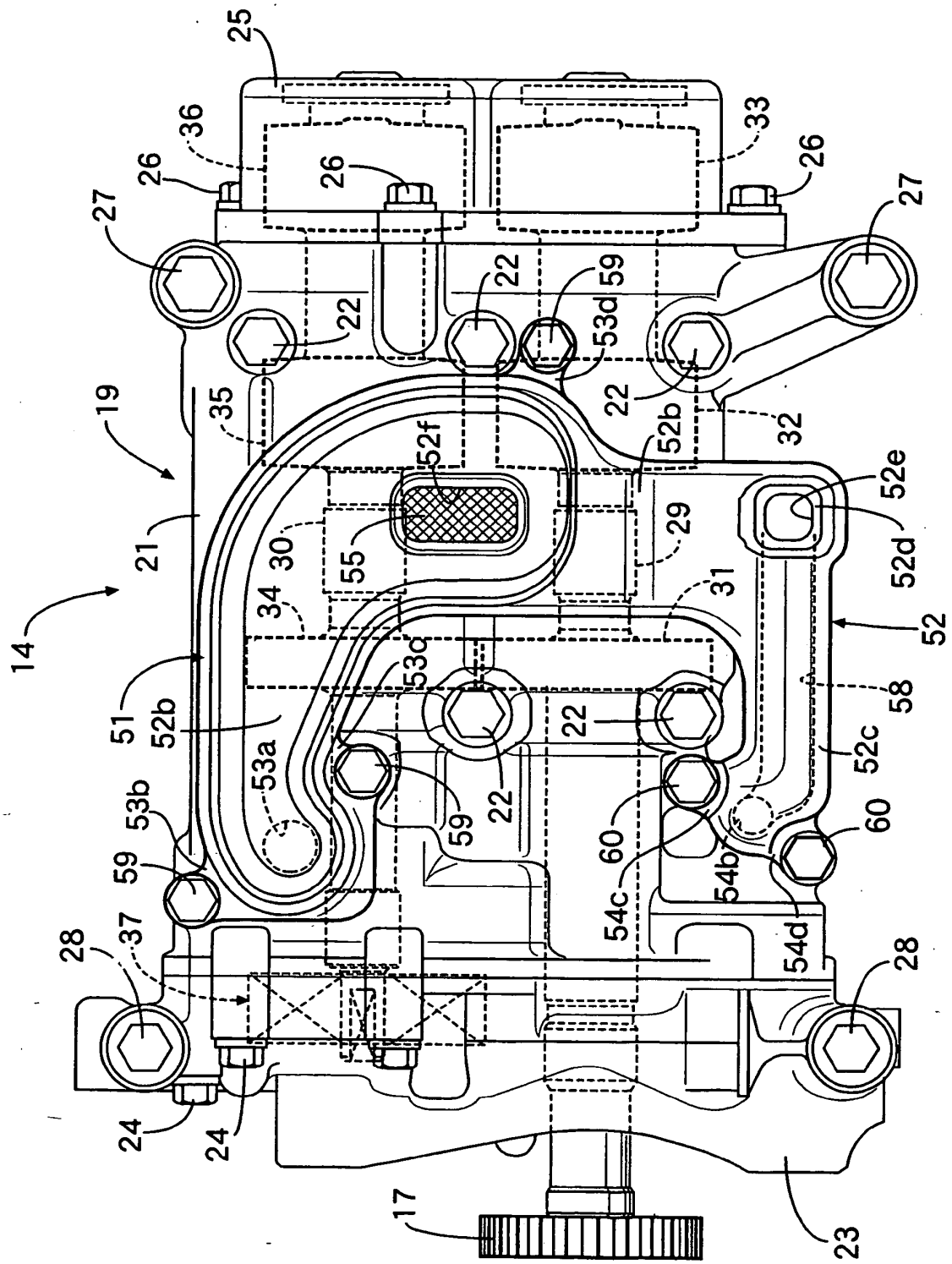
25
36
26
26
33
26
27
27
22
22
59
53d
22
19
35
52f
52b
32
52e
21
30
55
29
52d
14
34
31
52
51
52b
53c
58
22
53a
22
52c
53b
59
59
60
60
54b
54c
54d
28
37
28
24
24
17
23

FIG.5

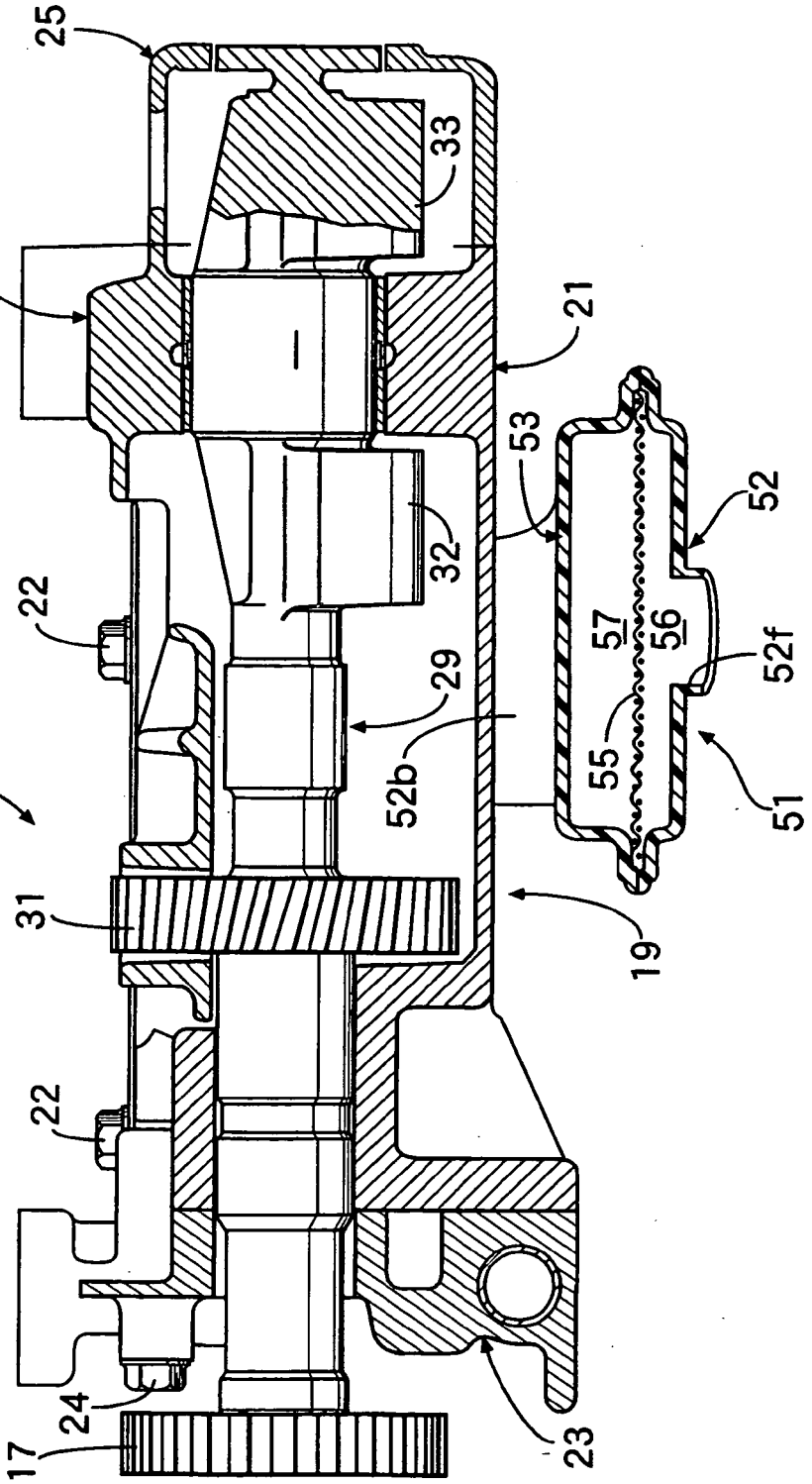

FIG.6

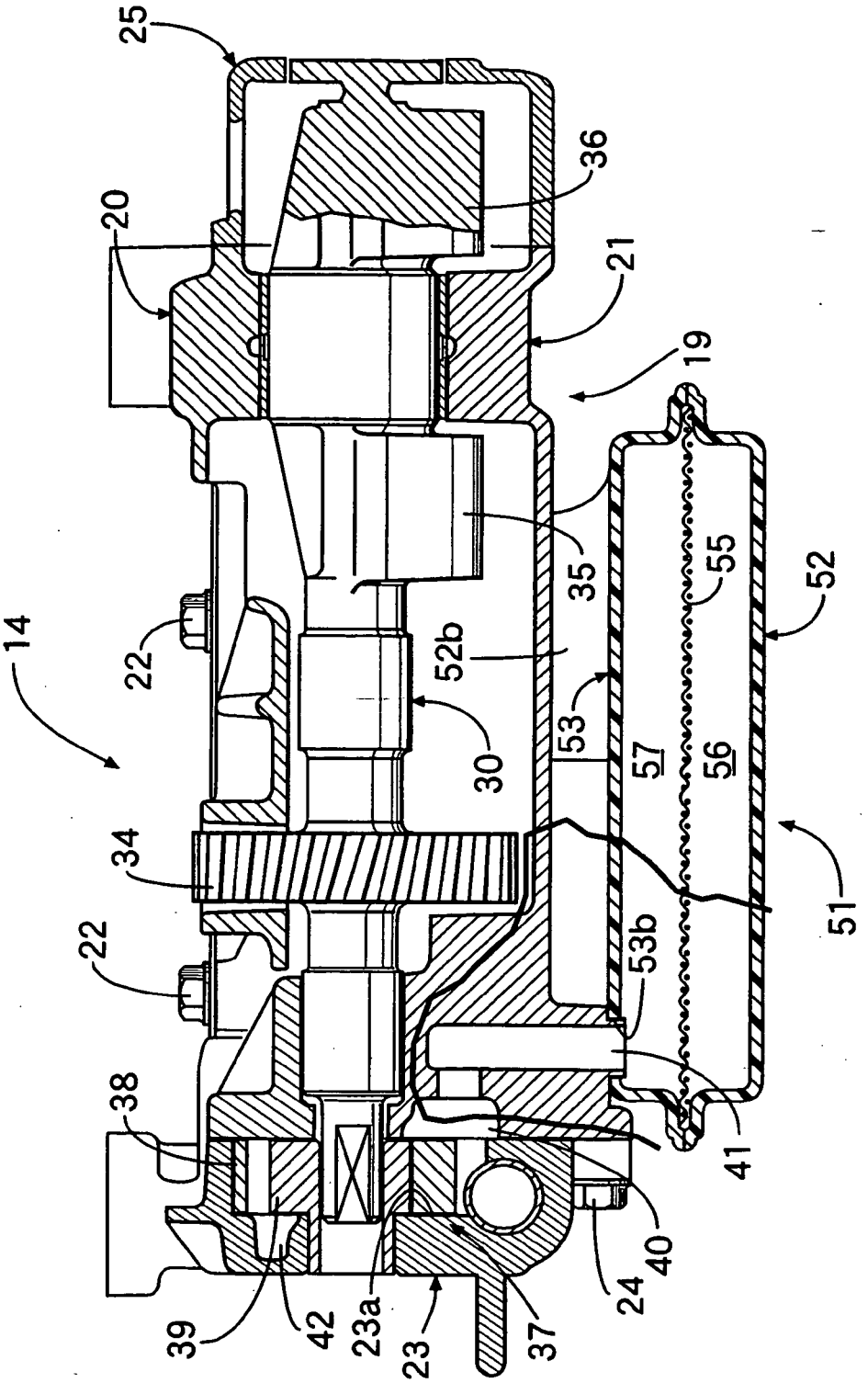
25
36
20
21
19
35
55
52
14
22
52b
53
57
56
30
34
51
22
53b
38
41
40
24
39
42
23a
23
37

FIG.7

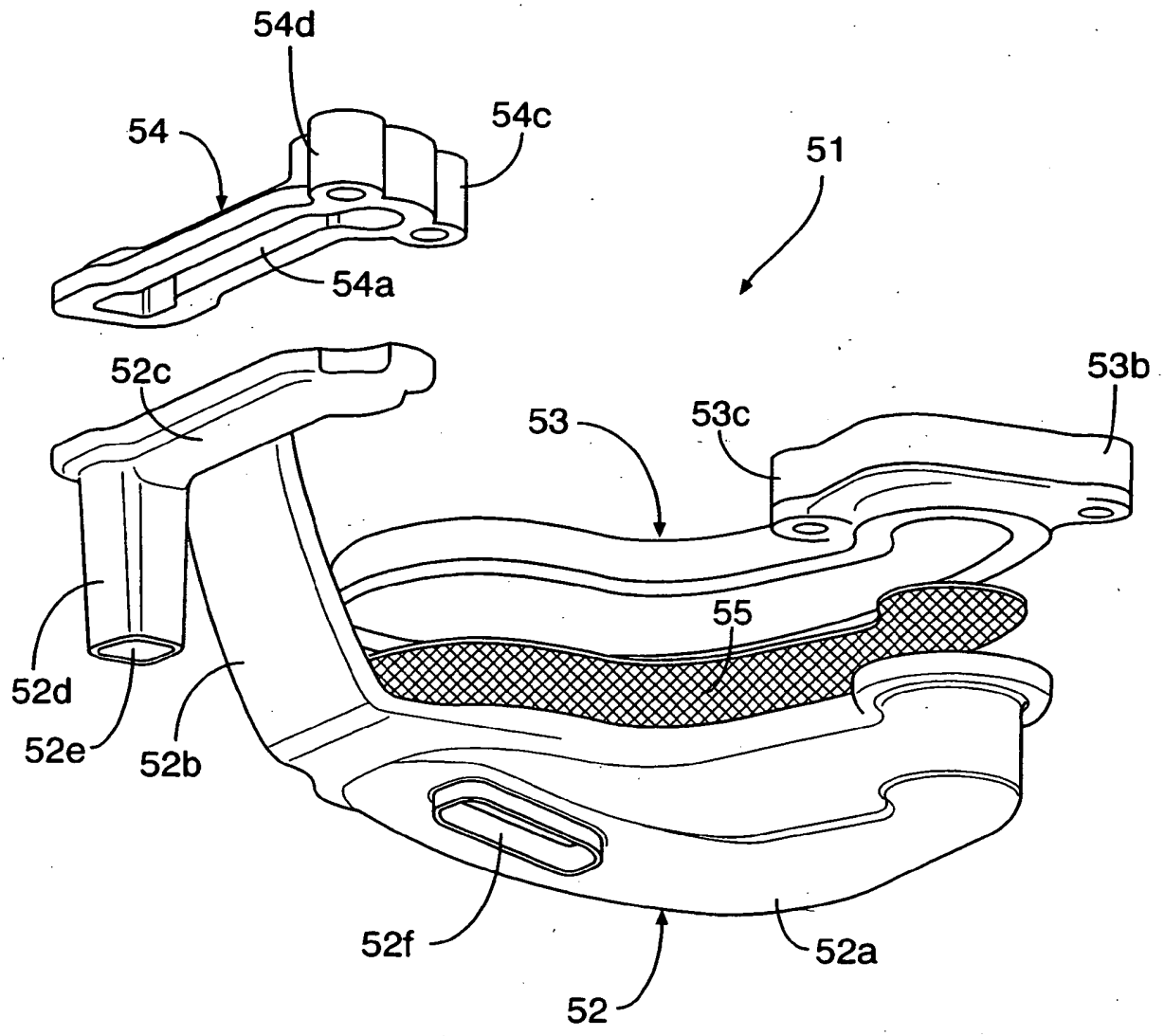

FIG.8

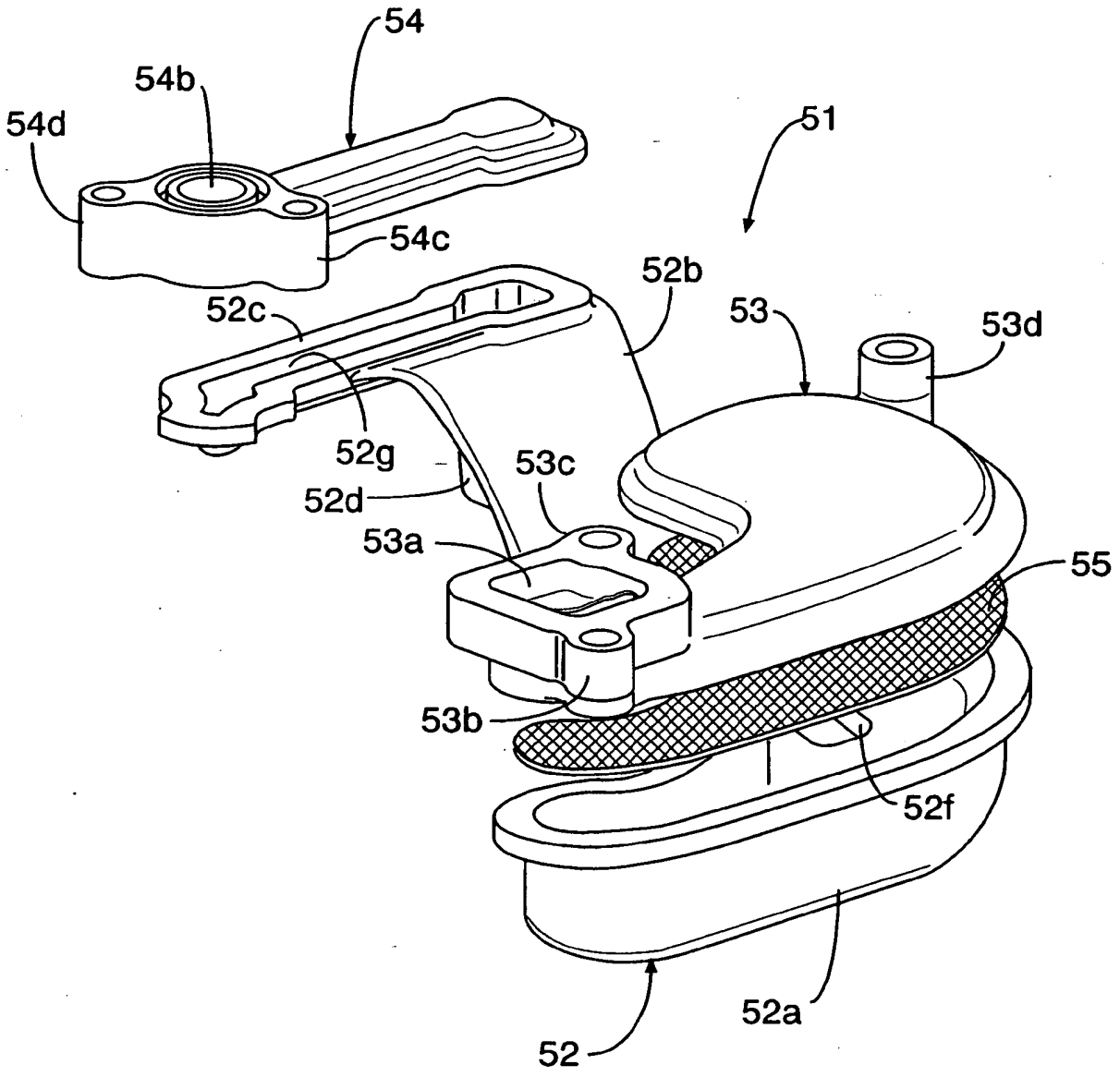

FIG.9

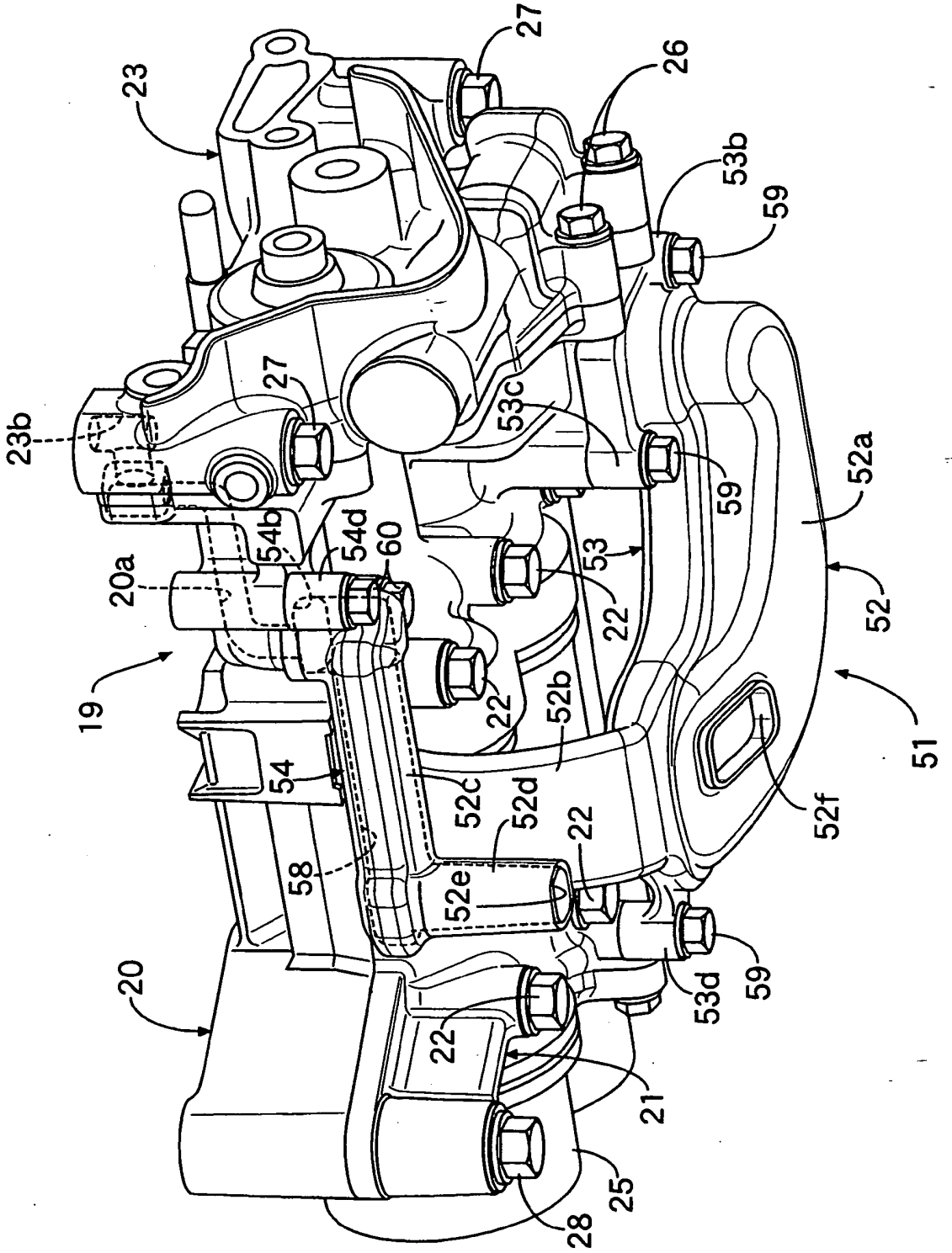
23
27
26
53b
59
23b
27
53c
59
52a
54b
54d
60
20a
53
22
52
19
22
52b
51
54
52c
52d
22
52f
58
52e
20
59
53d
22
21
25
28

FIG.10

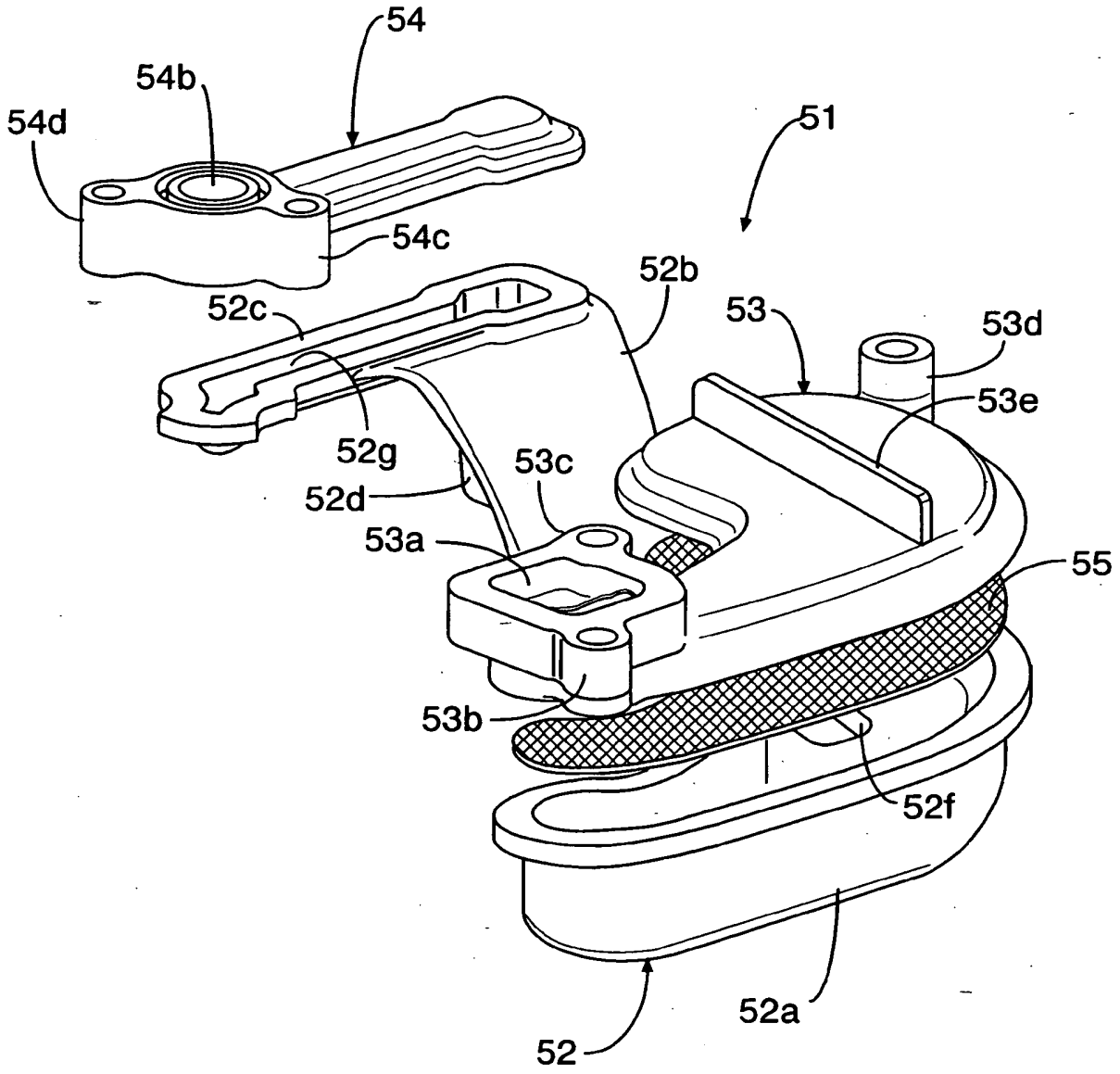
54
54b
54d
51
54c
52b
52c
53
53d
53e
52g
53c
52d
53a
55
53b
52f
52a
52

REFERENCES CITED IN THE DESCRIPTION

This list of references cited by the applicant is for the reader's convenience only. It does not form part of the European patent document. Even though great care has been taken in compiling the references, errors or omissions cannot be excluded and the EPO disclaims all liability in this regard.

Patent documents cited in the description

- JP 2001074105 A **[0002] [0005]**
- JP 2003201815 A **[0004] [0008]**
- EP 0789164 A **[0010]**
- US 5049274 A **[0011]**