(19) Europäisches Patentamt
European Patent Office
Office européen des brevets

(11) EP 1 629 747 B1

(12) **EUROPEAN PATENT SPECIFICATION**

(45) Date of publication and mention of the grant of the patent:
22.05.2013 Bulletin 2013/21

(51) Int Cl.:
A47C 1/06 *(2006.01)* ***A47C 1/10*** *(2006.01)*
A45D 19/10 *(2006.01)*

(21) Application number: **05255268.4**

(22) Date of filing: **26.08.2005**

(54) **Barber/beauty chair**

Haarpflege- oder Schönheitspflegestuhl

Chaise de coiffeur ou de beauté

(84) Designated Contracting States:
DE GB IT

(30) Priority: **27.08.2004 JP 2004249283**

(43) Date of publication of application:
01.03.2006 Bulletin 2006/09

(73) Proprietor: **Takara Belmont Corporation**
Osaka 542-0083 (JP)

(72) Inventors:
- **Takada, Tomoaki,**
Takara Belmont Corporation
Osaka-shi
Osaka 542-0032 (JP)
- **Yoshikawa, Kouta,**
Takara Belmont Corporation
Osaka-shi
Osaka 542-0032 (JP)
- **Kuroda, Kazuhiko,**
Takara Belmont Corporation
Osaka-shi
Osaka 542-0032 (JP)

(74) Representative: **Haley, Stephen**
Gill Jennings & Every LLP
The Broadgate Tower
20 Primrose Street
London EC2A 2ES (GB)

(56) References cited:
NL-C2- 1 025 913 **US-A- 4 527 976**
US-A- 5 620 230 **US-A1- 2002 020 013**

Note: Within nine months of the publication of the mention of the grant of the European patent in the European Patent Bulletin, any person may give notice to the European Patent Office of opposition to that patent, in accordance with the Implementing Regulations. Notice of opposition shall not be deemed to have been filed until the opposition fee has been paid. (Art. 99(1) European Patent Convention).

EP 1 629 747 B1

Printed by Jouve, 75001 PARIS (FR)

Description

[0001] The present invention relates to a chair for a barber/beauty chair in which a shampoo bowl is on the side of the back rest, this chair enabling customer's hairs to be washed immediately by only ascending or descending the height thereof corresponding to the height of the customer regardless of a difference in the height of the customer.

[0002] Conventionally, in case of washing the hairs of a customer who lies on his or her back on a chair of a barber shop or beauty parlor, generally the customer moves from a chair for hairdressing to a chair for hair washing, for example, a chair disclosed in Japanese Patent Application JP 2002-102001 A, such that his or her neck rear portion is placed on a neck supporting portion of a shampoo bowl. The invention of this publication comprises a hair washing unit and a chair and the hair washing unit and the chair each contain elevation means for adjusting the height thereof.

[0003] With the customer lying on the chair, the heights of the chair and the hair washing unit are adjusted corresponding to the height of the customer by controlling the height elevation means so as to fit his or her neck rear portion to the neck supporting portion of the shampoo bowl, before washing the hairs is started.

[0004] If the hairwashing unit and the chair are separated like in the above-described conventional example, it is necessary to adjust the height of the chair and the height of the hair washing unit synchronously and therefore, there is a problem that this adjustment work is troublesome and further, because the elevation means need to be equipped on both the chair and the hair washing unit, a necessary structure becomes complicated, which is another problem to be solved.

[0005] The present invention has been achieved to solve the above-described problem and an object of the invention is to provide a barber/beauty chair enabling optimum hair washing operation by only adjustment for making it easy for a hairdresser to wash hairs of a customer by ascending or descending a chair without any means for fitting the neck rear portion of the customer to a neck receiving portion of a shampoo bowl, by mounting the shampoo bowl integrally at the front end of a back rest of the chair.

[0006] The barber/beauty chair of the present invention aims at achieving the above-described object and according to the invention, there is provided a barber/beauty chair comprising:

a base;
elevation means;
a chair mounting member mounted on the base through the elevation means;
a chair mounted on the chair mounting member; and
a shampoo bowl mounted on the side of a back rest of the chair on the chair mounting member.

[0007] According to a second aspect of the invention, there is provided the barber/beauty chair according to the first aspect wherein the chair is formed in the shape of a bed and a concave portion is formed on a side in the longitudinal direction to facilitate riding on/getting out of the chair while a swollen portion is formed on the other side opposing the concave portion.

[0008] According to a third aspect of the invention, there is provided the barber/beauty chair according to the first aspect wherein the shampoo bowl is mounted movably back and forth with respect to the chair mounting member.

[0009] According to a fourth aspect of the invention, there is provided the barber/beauty chair according to the first aspect wherein a supporting member in which a cervix supporting portion for supporting the neck rear portion of a customer and a head supporting portion for supporting the back of the head are formed integrally is mounted on a neck supporting portion in the shampoo bowl rotatably.

[0010] According to a fifth aspect of the invention, there is provided the barber/beauty chair according to the first aspect wherein at least a back rest is mounted on the chair mounted on the top face of the chair mounting member such that it is capable of rising or falling.

[0011] According to a sixth aspect of the invention, there is provided the barber/beauty chair according to the first aspect wherein a seat portion of the chair is mounted movably in the back and forth direction with respect to the chair mounting member and a back rest is mounted on the seat portion such that it is capable of rising or falling.

[0012] According to a seventh aspect of the invention, there is provided the barber/beauty chair according to the fifth or sixth aspect wherein a pillow member is mounted slidably on a front end of the back rest.

[0013] According to an eighth aspect of the invention, there is provided the barber/beauty chair according to the sixth or seventh aspect wherein a cervix supporting portion for supporting the neck rear portion of a customer is formed in the pillow member.

[0014] According to a ninth aspect of the invention, there is provided the barber/beauty chair according to the sixth or seventh aspect wherein a cervix supporting portion for supporting the neck rear portion of a customer and a head supporting portion for supporting the back of the head of the customer mounted integrally on the cervix supporting portion are formed on the pillow member.

[0015] According to a tenth aspect of the invention, there is provided the barber/beauty chair according to the seventh aspect wherein means for detecting the height of a pillow, which is the pulling amount of the pillow member, is mounted on the side of the back rest supporting the pillow member slidably and by adjusting a relative positional relation between the seat portion and the shampoo bowl, proportional to the amount of mobile proportional to the height of the pillow detected by the pillow height detecting means, the pillow member is po-

sitioned at a predetermined position of the shampoo bowl with control means.

[0016] According to an eleventh aspect of the invention, there is provided the barber/beauty chair according to the tenth aspect wherein adjustment of a relative positional relation between the seat portion and the shampoo bowl is carried out by mobile the seat portion back and forth.

[0017] According to a twelfth aspect of the invention, there is provided the barber/beauty chair according to the tenth aspect wherein adjustment of a relative positional relation between the seat portion and the shampoo bowl is carried out by mobile the shampoo bowl back and forth.

[0018] According to a thirteenth aspect of the present invention, there is provided the barber/beauty chair according to the tenth aspect wherein adjustment of a relative positional relation between the seat portion and the shampoo bowl is carried out by executing simultaneously the back and forth mobile of the seat portion and the back and forth mobile of the shampoo bowl.

[0019] Because as described above, the present invention comprises the chair mounting member mounted on the base through the elevation means, the chair mounted on the chair mounting member and the shampoo bowl mounted on the side of the back rest of the chair on the chair mounting member, it is not necessary to match the positions of the back rest and the shampoo bowl unlike conventionally, thereby improving the work efficiency of hairwashing. Further, because the elevation height of the chair can be adjusted corresponding to a hairdresser who washes the hairs standing up or sitting down, fatigue applied to the hairdresser is reduced.

[0020] Because the chair is formed in the shape of a bed and a concave portion is formed on a side in the longitudinal direction to facilitate riding on/getting out of the chair while a swollen portion is formed on the other side opposing the concave portion, a customer can ride on or get out of the chair easily through the concave portion and further with the safety using the swollen portion as a hand rail.

[0021] Because the shampoo bowl mounted on the side of the chair is constructed to be movable back and forth, if there is a deflection in position between the neck rear portion of the customer lying on the back and the cervix supporting portion, the positions can be matched without the customer's sliding his or her body and thus, it is not necessary for the customer to move his or her body up and down in conditions in which he or she is lying on the back.

[0022] Because a supporting member in which a cervix supporting portion for supporting the neck rear portion of a customer and a head supporting portion for supporting the back of the head are formed integrally is mounted on a neck supporting portion in the shampoo bowl rotatably, a personal difference in the positional relation between the cervix and the back of the head is absorbed, thereby not pressing the cervix or giving any pain.

[0023] Further, because the back rest is mounted on the chair such that it is capable of rising or falling, the head supporting unit is located at the neck portion of the customer when the back rest is fallen and further, because the head supporting unit is rotatable with respect to the shampoo bowl, it can guide the head portion to a predetermined position.

[0024] Because a seat portion of the chair is mounted movably in the back and forth direction with respect to the chair mounting member and a back rest is mounted on the seat portion such that it is capable of rising or falling, the neck portion of the customer can be easily fitted to the neck supporting portion of the shampoo bowl by adjusting the mobile in the back and forth direction of the seat portion and the inclination angle of the back rest.

[0025] Because a pillow member is mounted slidably on a front end of said back rest, by falling the back rest with the neck rear portion of a customer seated on the chair matched with the pillow member, the pillow member can match the neck supporting portion of the shampoo bowl and consequently, the neck portion of the customer is fitted to the neck supporting portion of the shampoo bowl, whereby achieving hair washing operation quickly without any special skill.

[0026] Because the pillow member is provided with a cervix supporting portion for at least supporting the neck rear portion of the customer, the customer can have his or her hairs washed with the neck rear portion supported stably and in a comfortable posture. Further, because the back of the customer's head is supported by the head supporting portion, the posture of the customer at the time of hair washing is stabilized and no unreasonable force is applied to the cervix of the customer and no feeling of fatigue is applied to the customer. Further, because the pillow member is mounted to be swingably with respect to the up/down mobile plate which is slidable to and can be fixed to the back rest, the head portion is fitted to the pillow member and the be fixed to the rest, the head portion is fitted to the pillow member and the posture of the customer at the time of hair washing is stabilized more, whereby a load applied to the neck being reduced.

[0027] Because by mobile the pillow member up/down corresponding to the height of the customer in a seated condition, the head portion is fitted to the pillow member and the chair or the shampoo bowl or both of them are moved back and forth by an amount equal to the up/down mobile of the pillow member so as to match the pillow member with the neck portion of the shampoo bowl when the back rest is fallen, an operation up to hair washing can be carried out very easily.

FIG. 1 is a perspective view of a condition in which the head supporting unit of the invention is mounted on a chair;

FIG. 2 is a side view of the same;

FIG. 3 is a plan view of the same;

FIG. 4 is a sectional view taken along lines A-A of

the same;
FIG. 5 is a sectional view of a condition in which the same chair is elevated;
FIG. 6 is a perspective view of a shampoo bowl as seen from above;
FIG. 7 is an enlarged sectional view showing the section of the head supporting unit;
FIG. 8A is a side view of the head supporting unit, FIG. 8B is a front view thereof and FIG. 8C is a bottom view thereof;
FIG. 9 is a side view of a condition in which the chair of a second embodiment is raised;
FIG. 10 is a side view of a condition in which the same chair is fallen;
FIG. 11 is a sectional view before the shampoo bowl is moved, according to a third embodiment;
FIG. 12 is a sectional view of a condition in which the same shampoo bowl is moved;
FIG. 13 is a side view of a condition in which a customer is seated on a chair according to a fourth embodiment;
FIG. 14 is a side view of a condition in which a pillow member of the same is pulled up;
FIG. 15 is a side view of a condition in which the seat portion of the same is advanced;
FIG, 16 is a side view showing a condition enabling hairs to be washed by falling down the back rest of the same;
FIG. 17 is a perspective view showing part of the shampoo bowl;
FIG. 18 is a partially enlarged sectional view of the same;
FIG. 19A is a side view of the pillow member, FIG. 19B is a front view of the pillow member and FIG. 19C is a bottom view of the pillow member;
FIG. 20 is a system block diagram showing control means for advancing the seat;
FIG. 21 is a flow chart for explaining the operation by control means of the same;
FIG. 22 is a side view showing a condition before a customer is seated according to a fifth embodiment;
FIG. 23 is a side view showing the condition enabling hairs to be washed according to the fifth embodiment;
FIG. 24 is a side view showing a condition before the customer is seated according to a sixth embodiment; and .
FIG. 25 is a side view showing the condition enabling hairs to be washed according to the sixth embodiment.

[0028] According to the present invention, a shampoo bowl is mounted on the side of the back rest of a chair and the chair can be ascended or descended by elevation means.

First embodiment

[0029] Next, the first embodiment of the barber/beauty chair of the present invention will be described with reference to the accompanying drawings.

[0030] FIGS. 1 to 5 show a condition in which a shampoo bowl equipped with a head supporting unit of the invention is mounted integrally on the front end of the back rest of a chair and FIGS. 6 to 8 show the head portion supporting unit.

[0031] Referring to FIGS. 1 to 5, reference numeral 1 denotes a base to be installed on floor, reference numeral 2 denotes a bed-like chair and reference numeral 3 denotes elevation means which is journaled rotatably at an end by the base 1 and journaled by the bottom portion of the chair rotatably at the other end so as to move the chair 2 in parallel vertically. As shown in FIGS. 4 and 5, this elevation means 3 comprises a parallel link 32 which is journaled by a rising plate 31 rising from the base 1 at one end while the other end thereof is journaled by a drooping plate 21 which droops from the chair 2 and a covering plate 34 which covers a hydraulic cylinder 33 and the parallel link 32.

[0032] The chair 2 is formed into the shape of a bed and a concave portion 22 is formed on a side in the longitudinal direction for a customer to be able to ride on and get out of the chair easily, while a swollen portion 23 is formed on the other side opposing the concave portion 22, which the customer lying on the chair 2 grips as a hand rail during hair washing operation or when he or she rides on or gets out of the chair. An extension plate 26 is mounted on the rear face of a shape holding plate 24 of the chair 2 via an intermediate plate 25 such that it extends toward the front end of a back rest portion 27. The drooping plate 21 is mounted on this extension plate 26. The intermediate plate 25 and the extension plate 26 serve as a chair mounting member for mounting the chair 2 on the elevation means 3. Reference numeral 28 denotes a covering plate which covers the surrounding of the chair mounting member.

[0033] Reference numeral 4 denotes a shampoo bowl, which is fixed to an end of a mounting plate 41 whose other end is fixed to the extension plate 26. A drain pipe 44 for draining from a drainage hole 43 of the shampoo bowl 4 and a hot water pipe 46 for supplying hot water to a shower head 45 are inserted from the rear face of the shampoo bowl 4 and placed within a blind plate 42 covering the rear face of the chair 2 and connected to a drain pipe and a hot water pipe placed below the floor via the covering plate 34 of the elevation means 3.

[0034] Reference numeral 47 denotes a hose for connecting a water handle 48 with a shower head 45.

[0035] Although a case of the shampoo bowl 4 where hot water of a desired temperature is supplied to the water handle 48 has been described above, it is permissible to place two pipes for relatively hot water and cool water below the floor and install a mixing handle on the shampoo bowl 4 so as to supply hot water of a desired tem-

perature from this mixing handle to the shower head 45.

[0036] Reference numeral 5 denotes a head supporting unit represented in detail in FIGS. 6 to 8, which is journaled rotatably by a concave cut-out portion 49 of the shampoo bowl 4. The head supporting unit 5 includes a supporting member 53 comprised of a cervix supporting portion 51 formed in a L shape in cross section and a head supporting portion 52, and a supporting metal 54 which is fixed on the cut-out portion 49 of the shampoo bowl 2, journaling the Supporting member 53 rotatably.

[0037] The cervix supporting portion 51 has a curved top portion, which is an appropriate shape for supporting the neck of a customer. Cushion material 51a in which gel, foamed material or the like is covered with sheet of leather, synthetic resin or the like is mounted on the curved portion 51. The head supporting portion 52 is constituted of two arms projecting from the cervix supporting portion 51 to support the head portion at two positions. The top face of the arm is provided with cushion material 52a in which gel, foamed material or the like is covered with sheet of leather, synthetic resin or the like. When the cervix supporting portion 51 is in a vertical condition, the bottommost position of the curve of the cervix supporting portion 51 and the top face of the head supporting portion 52 are at the same height or the head supporting portion 52 is located slightly below the head supporting portion 52.

[0038] By inserting a shaft passing through a rising portion 54a of the supporting metal 54 fixed to the cut-out portion 49 into a shaft hole 53a formed in the supporting member 53, the supporting member 53 is rotatable with respect to the supporting metal 54.

[0039] Referring to FIGS. 1 and 2, reference numeral 6 denotes a foot controller for controlling a hydraulic cylinder of the elevation means 3.

[0040] Although as the aforementioned elevation means 3, a combination of the parallel link 32 and the hydraulic cylinder 33 has been described, it is permissible to use a single or multiple stage hydraulic cylinders for elevating the chair.

[0041] Next, the operation of the carrying unit will be described based on the above-described structure.

[0042] A customer is urged to ride on the chair 2 from the side of the concave portion 22 thereof and at this time, by using the swollen portion 23 as a hand rail, he or she can ride on the chair easily. After that, the customer is urged to lie on the back with the neck rear portion of the customer placed on the cervix supporting portion 51 of the head supporting unit 5 and the back of the head apart from the neck rear portion placed on the head supporting portion 52. Even if there is a difference in positional relation between the back of the head and the neck due to personal difference of the customer at this time, because the head supporting unit 5 is rotatable freely, it rotates backward as indicated with a phantom line in FIG. 7 (clockwise in the same Figure) if the difference of the positional relation between the back of the head and the neck portion is large or the cervix supporting portion 51 gets into substantially vertical condition as indicated with a solid line, thereby preventing the head of the customer from bending around the neck, giving no pain to the customer.

[0043] If a hairdresser intends to wash customer's hairs standing up or sitting down with the customer's head kept in a stable condition, he or she ascends the chair 2 up to an appropriate position to washing the hairs by pressing down the foot controller 6. If the washing the hairs is completed, the chair is descended by pressing down the foot controller 6 and then by urging the customer to get out of the concave portion 22, the hair washing work ends. In the meantime, because the swollen portion 23 is formed in the chair 2, the customer can ride on the chair 2 easily by using this as a hand rail.

Second embodiment

[0044] Next, the second embodiment of the barber/beauty chair of the present invention will be described with reference to FIGS. 9 and 10.

[0045] According to this embodiment, by forming the shape of the chair 2 equipped with the shampoo bowl 4 shorter on the foot side in the longitudinal direction (left side in the same Figure), a chair 7 for supporting the customer is attached to the chair mounting member, different from the above-described embodiment in which the chair is bed-like.

[0046] In this chair 7, a seat portion 71 is fixed to the base 1 via a seat portion base plate 71 a. An apron 72 is journaled swingably via arms 72a at a front end of the seat portion base plate 71 a and a back rest 73 is journaled at the rear end of the seat portion base plate 71a such that it is capable of rising or falling freely. An end of a hydraulic cylinder 74 is journaled by the rear face of the seat portion 71 while the other end is journaled by an arm 73b extending form the back rest 73. A link 75 is journaled between the arm 73b and the arm 72b mounted on the rear face of the apron 72.

[0047] Because the structures of the base 1, the elevation means 3, the shampoo bowl 4 and the head portion supporting unit 5 are the same as the first embodiment, description thereof is omitted.

[0048] According to this embodiment, as shown in FIG. 9, the apron 72 is drooped by projecting the piston of the hydraulic cylinder 74 as shown in FIG. 9 and at the same time, the back rest is raised. With this condition, the customer is urged to sit on the seat portion 71. Next, by contracting the piston of the hydraulic cylinder 74, the apron 71 and the back rest 73 are kept into a horizontal condition (see FIG. 10) and the customer is urged to lie on his or her back with the neck rear portion placed on the cervix supporting portion 51 and the back of the head placed on the head supporting portion 52.

[0049] Even if there is a slight difference in height of the customer lying on the back, the customer can be given a fitting feeling without any unreasonable burden because the head supporting portion 5 rotates relative to

the neck supporting portion 49 of the shampoo bowl 4. After the head portion is supported in a stable condition, the hairdresser presses down a foot controller (not shown) to ascend the chair mounting member up to a height which allows him or her to execute the hair washing operation smoothly and then he or she begins to wash the hairs.

[0050] If the washing the hairs is completed, oil is supplied to the piston of the hydraulic cylinder 74 so as to droop the apron 72 and raise the back rest to return to the condition of FIG. 9, so that the customer is brought back to a sitting condition and the hair washing operation ends. The hydraulic cylinder 74 is controlled with the foot controller also.

Third embodiment

[0051] Next, the third embodiment of the barber/beauty chair of the present invention will be described with reference to FIGS. 11 and 12.

[0052] According to this embodiment, the shampoo bowl 4 is mounted on the chair mounting member such that it is capable of mobile back and forth, different from the above-described embodiments in which the shampoo bowl is fixed to the chair mounting member such that it is incapable of mobile.

[0053] That is, two rollers 41 a are mounted on the right and left sides of the mounting plate 41 which is a chair fixing member and the shampoo bowl 4 is mounted on a guide member 48 mounted guided by the rollers 41 a such that it is capable of mobile back and forth. Further, a hydraulic cylinder 49 for the bowls is mounted to move the shampoo bowl 4 back and forth in conditions in which an end thereof is journaled by the mounting plate 41 while the other end is journaled by the guide member 48.

[0054] With such a structure, if the neck rear portion of a customer lying on the back on the chair 2 or sitting on the chair 7 with the back rest 73 fallen deflects from the cervix supporting portion 51 of the head supporting member 5, this can be matched by mobile the shampoo bowl 4. As a consequence, the neck rear portion of the customer can be fitted to the cervix supporting portion 51 and the back of the head can be fitted to the head supporting portion 52 without customer's mobile his or her body back and forth.

Fourth embodiment

[0055] Next, the fourth embodiment will be described with reference to FIGS. 13 and 14. Like reference numerals indicates the same components as the above-described embodiments and description thereof is omitted.

[0056] Referring to these Figure, reference numeral 1 denotes a base installed on the floor surface and reference numeral 3 denotes elevation means which is journaled by the base 1 at an end by the chair mounting member at the other end and incorporates a hydraulic cylinder and a parallel link (not shown) internally. Then, if oil is poured into a hydraulic cylinder, the parallel link rises so that the chair mounting member rises in parallel and when oil is discharged, it falls down.

[0057] Two rollers 81 are attached to the right and left members of the mounting plate 41 on its front end side (left side in the same Figure) and the chair 8 is mounted such that its seat portion 83 is fixed on a guide member 82 mounted movably in the back and forth direction while guided by the rollers 81. A step 84 is mounted on the rear face of the seat portion 83 of this chair such that it droops and a back rest 86 is mounted on the rear end side of the seat portion 83 via a link 85 such that it is capable of rising and falling.

[0058] An end of a hydraulic cylinder 88 whose other end is journaled by a link 85 is journaled by the guide member 82 and further journaled by an end of a hydraulic cylinder 87 for the seat portion whose other end is journaled by the mounting plate 41.

[0059] In the chair 8 having such a structure, when oil is supplied to the hydraulic cylinder 87 for the seat portion, the seat portion 83 moves forward with respect to the mounting plate 41 and if oil is discharged, it moves backward by a spring force of a spring (not shown). If oil is supplied to the hydraulic cylinder 88 for the back rest, the link 85 is rotated counterclockwise so as to rise the back rest 86 and if oil is discharged, the link 85 is rotated clockwise by a spring force of a spring (not shown) so as to rotate the link 85 clockwise, so that the back rest falls down.

[0060] A core member 86a of the back rest 86 in the chair 8 incorporates a supporting member 89 for supporting a up/down mobile plate 91 of a pillow member 9 described later with some extent of friction force such that it is capable of mobile vertically and within this supporting member 89 is formed pillow height detecting means 89a (for example, a number of slits are formed in the longitudinal direction of the up/down mobile plate 81 and a transmission type photo sensor is disposed across the slit, so that the photo sensor counts the number of the slits to detect the amount of mobile) shown in FIG. 19 for detecting the amount of mobile of the up/down mobile plate 91 in the vertical direction.

[0061] Next, the detail of the pillow member 9 will be described with reference to FIGS. 17 to 19. The pillow member 9 is comprised of a cervix supporting portion 92 and a head supporting portion 93 formed in an L shape journaled rotatably by a projecting piece 91 a formed at the top end of the up/down mobile plate 91.

[0062] The cervix supporting portion 92 has a curved top face which is an appropriate shape for supporting the neck portion of a customer. The curved portion is provided with a cushion material 92a in which gel, foamed material or the like is covered with sheet made of leather, synthetic resin or the like. The head supporting portion 93 is constituted of two arms extending from the cervix supporting portion 92 so as to support the head portion at two positions and a cushion material 93a in which gel, foamed material or the like is covered with leather, syn-

thetic resin or the like is mounted on the top face of the arm. The lowest curved portion of the cervix supporting portion 92 and the top face of the head supporting portion 93 are substantially flush with each other when the cervix supporting portion 92 is at right angle.

[0063] Next, control means will be described with reference to FIG. 20, which is used for setting the pillow member 9 at a predetermined position of the cervix supporting portion 49 in the shampoo bowl 4 by mobile the seat portion 88 forward proportional to the mobile amount for adjusting the seat portion 88 in terms of height when the pillow member 9 is adjusted in terms of height with respect to the back rest 86.

[0064] The control means 10 comprises the pillow height detecting means 89a for detecting an amount of mobile of the pillow member 9 from a reference point which is a point set up when the pillow member 9 is descended to the lowest position with respect to the back rest 86, seat portion position detecting means 101 for detecting an amount of mobile of the seat portion 83 in the forward direction from a reference point, which is a position set up when the seat portion 83 is moved to the most rearward end, for example, an amount of discharge of a piston of the seat portion hydraulic cylinder 87, a conversion table 102 which memorizes values obtained by experiment to see how much the seat portion 83 should be moved in the forward direction with respect to the mobile amount of the pillow member 9 for a rotating portion of the pillow member 9 attached to the up/down mobile plate 91 to be located at the neck supporting portion 49 of the shampoo bowl 4, seat portion mobile means 103 which is the hydraulic cylinder 87 for the seat portion, back rest rising/falling means 104 which is the hydraulic cylinder 88 for the back rest and a control CPU 105 for executing controls indicated in the flow chart of FIG. 21.

[0065] Next, the operation for controlling the structure of the barber/beauty chair by means of the control means 10 will be described with reference to a flow chart of FIG. 21.

[0066] First the control means 10 monitors to see whether or not the seat portion 83 is located at the reference position and it determines that the seat portion 83 is not located at the reference position, it returns the seat portion 83 to the reference position which is the most rearward portion by bleeding oil form the hydraulic cylinder 87 for the seat portion (step S1). Next, a customer is urged to sit down the chair 8 and if the height of a seated customer coincides with the height of the cervix supporting portion 92 of the pillow member 9, a hairdresser operates the cylinder 88 for the back rest, which is the back rest rising/falling means 104 and thus, the control means 10 monitors to see whether or not the back rest rising/falling means 104 is operated (step S2) and if it determines that the back rest rising/falling means 104 is operated, the procedure proceeds to step S11, in which the back rest 86 is fallen.

[0067] If the back rest rising/falling means 104 is not operated within a predetermined time in the step S2, that is, the neck rear portion of the customer does not coincide with the height of the cervix supporting portion 92, the pillow member 9 is raised. Thus, the control means 10 monitors to see if a necessary adjustment is performed by raising the cervix supporting portion 92 of the pillow member 9 so as to coincide with the neck rear portion (step S3) and if the adjustment is performed, a signal corresponding to the amount of mobile is outputted from the pillow height detecting means 89 (step S4).

[0068] When matching of the neck rear portion of the customer and the cervix supporting portion 92 ends, the amount of mobile of the seat portion in the forward direction is determined with an output value from the pillow height detecting means 89a according to the conversion table 102 (step S5). Next, if the aforementioned mobile amount is obtained from the conversion table 102, oil is supplied to the hydraulic cylinder 87 for the seat portion so as to advance the seat portion 83 (step S6).

[0069] Because the mobile of this seat portion 83 is monitored by the seat portion position detecting means 101, a mobile amount obtained by the conversion table 102 is compared with the amount of an actual mobile of the seat portion 83 (step S7) and the control means 10 monitors to see whether or not the mobile amount based on the conversion table 102 coincides with the mobile amount of the seat portion 83 as a result of the comparison (step S8) and if it determines that such a coincidence occurs, supply of oil to the hydraulic cylinder 88 for the seat portion, which is seat portion starting means 101, is stopped (step S9).

[0070] The hairdresser operates the back rest driving means 104 (step S10) to bleed oil from the hydraulic cylinder 88 for the back rest. As a consequence, the back rest 86 is fallen up to a position where the cervix supporting portion 92 of the pillow member 9 is located at the neck supporting portion 49 of the shampoo bowl 4 and after that, the hair washing operation is started.

[0071] Although in the previous description of the operation, a case of falling the back rest by operating the back rest falling means (for example, push-button switch) has been explained, it is permissible to automatically fall the back rest 86 if a signal saying that the advance of the seat portion 83 ends is received by the control means 10.

[0072] Because a falling angle of the back rest 86 in which the pillow member 9 makes contact with the neck supporting portion 49 of the shampoo bowl 4 changes corresponding to the amount of raising of the pillow member 9, if a back rest falling angle in which the pillow member 9 makes contact with the neck supporting portion 49 when the pillow member 9 is descended to its lowest position is set up, when the amount of raising of the pillow member 9 is large, the pillow member can be fitted to the neck supporting portion by hairdresser's operating the back rest falling means 104 to adjust the falling angle of the back rest 86.

[0073] As for other method, if the amount of raising of the pillow member 9 is detected, it is permissible to adjust the falling angle of the back rest 86 with the control means

10 corresponding to the amount of the raising in the same manner as for the adjustment of the forward mobile of the chair 83.

[0074] Next, a fifth embodiment of the present invention will be described with reference to FIGS. 22 and 23. Although the apron having a step 84 is fixed with respect to the seat portion 83 according to the fourth embodiment, the apron can be raised or fallen synchronously with an uneven shape of the back rest 86. Because the same reference numerals as the above-described embodiments indicate the same components, description of the respective members is omitted.

[0075] According to this embodiment, an apron 90 is journaled at the front end of the seat portion 83 such that it is capable of rising or falling and then, a joint plate 86b is mounted on the back rest 86, the joint plate 86b and the apron 89 being connected by a link 90a. With such a structure, by supplying oil to the hydraulic cylinder 88 for the back rest, the back rest 86 is raised and if the back rest 86 is raised, the apron 90 is raised via the link 90a. Further, by supplying oil to the hydraulic cylinder 88 for the back rest, the back rest 86 is fallen and if the back 86 rest is fallen, the apron 90 turns into a horizontal condition via the link 90a.

[0076] For the reason, when the customer is seated on the seat portion 83, the lower portion of his or her leg droops with respect to the upper portion thereof. When the customer lies on the back, his or her calf rides on the apron 90, so that the customer can have the hairs washed in a comfortable posture. Because the other operations are the same as the fifth embodiment, description of the operation is omitted.

Sixth embodiment

[0077] Next, the sixth embodiment of the present invention will be described with reference to FIGS. 24 and 25. Although according to the fourth and fifth embodiments, position matching is carried out by mobile the seat portion 83 when the pillow member 9 is moved up/down, the shampoo bowl 4 is constructed to be movable with respect to the mounting plate 41 fixed on the chair mounting member and by mobile the shampoo bowl 4 or mobile the seat portion 83 and the shampoo bowl 4, the position matching can be carried out. Because the same reference numerals as the fourth embodiment indicate the same portions, description of respective components is omitted. Description of the elevation means and base is omitted in the drawings.

[0078] According to this embodiment, two rollers 41 a are mounted on the right and left sides of the mounting plate 41 of the chair mounting member and the shampoo bowl 4 is mounted on the guide member 50 mounted movably guided by the rollers 41 a. Further, there is provided a hydraulic cylinder 50a for the bowl in which an end thereof is journaled by the mounting plate 41 while the other end is journaled by the guide member 50 so as to move the shampoo bowl 4 back and forth.

[0079] Although according to the fourth embodiment, the pillow member 9 is pulled out and the seat portion 83 is moved corresponding to the amount of mobile by the pulling, according to this embodiment, the seat portion 83 is fixed and the shampoo bowl 4 is moved backward (right direction in the same Figure) by injecting oil into the hydraulic cylinder 50a for the bowl, so that the cervix supporting portion 92 of the pillow member 9 can be positioned at the neck supporting portion 49 of the shampoo bowl 4.

[0080] According to this embodiment, because the seat portion 83 also movable, the mobile of the seat portion 83 of the fourth embodiment and the mobile of the shampoo bowl 4 of this embodiment with respect to the amount of the raising of the pillow member 9 are carried out at the same time by half the amount of the mobile each, time taken until a distance between the pillow member 9 and the shampoo bowl 4 reaches a predetermined gap is reduced and consequently, time taken until the hair washing operation is started can be reduced.

Claims

1. A barber/beauty chair comprising:

a base (1);
elevation means (3);
a chair mounting member (25, 26, 41) mounted on the base (1) through the elevation means (3);
a chair (2) mounted on the chair mounting member (25, 26, 41); and
a shampoo bowl (4) mounted on the side of a back rest (27; 86) of the chair on the chair mounting member (25, 26, 41).

2. The barber/beauty chair according to claim 1, wherein the chair (2) is formed in the shape of a bed and a concave portion (22) is formed on a side in the longitudinal direction to facilitate riding on/getting out of the chair (2) while a swollen portion (23) is formed on the other side opposing the concave portion.

3. The barber/beauty chair according to claim 1, wherein the shampoo bowl (4) is mounted movably back and forth with respect to the chair mounting member (25, 26, 41)

4. The barber/beauty chair according to claim 1, wherein a supporting member(s) in which a cervix supporting portion (51) for supporting the neck rear portion of a customer and a head supporting portion (52) for supporting the back of the head are formed integrally is mounted on a neck supporting portion (49) in the shampoo bowl (4) rotatably.

5. The barber/beauty chair according to claim 1, wherein at least a back rest (13) is mounted on the chair

(2) mounted on the top face of the chair mounting member (25, 26, 41) such that it is capable of rising or falling.

6. The barber/beauty chair according to claim 1, wherein a seat portion (83) of the chair (2) is mounted movably in the back and forth direction with respect to the chair mounting member (25, 26, 41) and a back rest (86) is mounted on the seat portion (83) such that it is capable of rising or falling.

7. The barber/beauty chair according to claim 5 or 6, wherein a pillow member (9) is mounted slidably on a front end of the back rest (86).

8. The barber/beauty chair according to claim 6 or 7, wherein a cervix supporting portion (92) for supporting the neck rear portion of a customer is formed in the pillow member (9).

9. The barber/beauty chair according to claim 6 or 7, wherein a cervix supporting portion (92) for supporting the neck rear portion of a customer and a head supporting portion (93) for supporting the back of the head of the customer mounted integrally on the cervix supporting portion (92) are formed on the pillow member (9).

10. The barber/beauty chair according to claim 7, wherein means for detecting the height of a pillow, which is the pulling amount of the pillow member (9), is mounted on the side of the back rest (86) supporting the pillow member (9) slidably and by adjusting.a relative positional relation between the seat portion (83) and the shampoo bowl (4), proportional to the amount of movement proportional the height of the pillow detected by the pillow height detecting means, the pillow member (9) being positioned at a predetermined position of the shampoo bowl (4) by control means (10).

11. The barber/beauty chair according to claim 10, wherein adjustment of a relative positional relation between the seat portion (83) and the shampoo bowl (4) is carried out by moving the seat portion (83) back and forth.

12. The barber/beauty chair according to claim 10, wherein adjustment of a relative positional relation between the seat portion (83) and the shampoo bowl (4) is carried out by moving the shampoo bowl (4) back and forth.

13. The barber/beauty chair according to claim 10, wherein adjustment of a relative positional relation between the seat portion (83) and the shampoo bowl (4) is carried out by executing simultaneously back and forth motion of the seat portion (83) and back and forth motion of the shampoo bowl (4).

Patentansprüche

1. Haarpflege- oder Schönheitspflegestuhl, umfassend:

eine Basis (1);
Erhöhungsmittel (3);
ein Stuhlmontageelement (25, 26, 41), das auf der Basis (1) durch das Erhöhungsmittel (3) montiert ist;
einen Stuhl (2), der auf dem Stuhlmontageelement (25, 26, 41) montiert ist; und
eine Shampooschale (4), die an der Seite einer Rückenlehne (27; 86) des Stuhls am Stuhlmontageelement (25, 26, 41) montiert ist.

2. Haarpflege- oder Schönheitspflegestuhl nach Anspruch 1, wobei der Stuhl (2) in Form eines Betts geformt ist und ein konkaver Teil (22) auf einer Seite in der Längsrichtung geformt ist, um Aufsitzen auf den und Aufstehen vom Stuhl (2) zu erleichtern, wogegen ein geschwollener Teil (23) auf der anderen Seite geformt ist, die dem konkaven Teil gegenüberliegt.

3. Haarpflege- oder Schönheitspflegestuhl nach Anspruch 1, wobei die Shampooschale (4) in Bezug auf das Stuhlmontageelement (25, 26, 41) rückwärts und vorwärts beweglich montiert ist.

4. Haarpflege- oder Schönheitspflegestuhl nach Anspruch 1, wobei ein Stützelement(e), bei dem ein Nacken stützender Teil (51) zum Stützen des hinteren Teils des Halses eines Kunden und ein Kopf stützender Teil (52) zum Stützen der Rückseite des Kopfes integral geformt sind, an einem Hals stützenden Teil (49) in der Shampooschale (4) drehbar montiert ist.

5. Haarpflege- oder Schönheitspflegestuhl nach Anspruch 1, wobei zumindest eine Rückenlehne (13) am Stuhl (2) montiert ist, der auf der Oberfläche des Stuhlmontageelements (25, 26, 41) derart montiert ist, dass er fähig ist, erhöht oder gesenkt zu werden.

6. Haarpflege- oder Schönheitspflegestuhl nach Anspruch 1, wobei ein Sitzteil (83) des Stuhls (2) in der Rückwärts- und Vorwärtsrichtung in Bezug auf das Stuhlmontageelement (25, 26, 41) beweglich montiert ist und eine Rückenlehne (86) am Sitzteil (83) derart montiert ist, dass sie fähig ist, erhöht oder gesenkt zu werden.

7. Haarpflege- oder Schönheitspflegestuhl nach Anspruch 5 oder 6, wobei ein Kissenelement (9) ver-

schiebbar an einer Stirnseite der Rückenlehne (86) montiert ist.

8. Haarpflege- oder Schönheitspflegestuhl nach Anspruch 6 oder 7, wobei ein Nacken unterstützender Teil (92) zum Stützen des hinteren Teils des Halses eines Kunden im Kissenelement (9) geformt ist.

9. Haarpflege- oder Schönheitspflegestuhl nach Anspruch 6 oder 7, wobei ein Nacken stützender Teil (92) zum Stützen des hinteren Teils des Halses eines Kunden und ein Kopf stützender Teil (93) zum Stützen der Rückseite des Kopfes des Kunden, die integral am Nacken stützenden Teil (92) montiert sind, am Kissenelement (9) geformt sind.

10. Haarpflege- oder Schönheitspflegestuhl nach Anspruch 7, wobei das Mittel zum Detektieren der Höhe eines Kissens, die der Zugumfang des Kissenelements (9) ist, an der Seite der Rückenlehne (86) montiert ist, die das Kissenelement (9) verschiebbar stützt und durch Einstellen einer relativen Positionsbeziehung zwischen dem Sitzteil (83) und der Shampooschale (4), proportional zum Bewegungsumfang proportional der vom Detektionsmittel für Kissenhöhe detektierten Höhe des Kissens, das Kissenelement (9) an einer vorgegebenen Position der Shampooschale (4) durch Steuerungsmittel (10) positioniert wird.

11. Haarpflege- oder Schönheitspflegestuhl nach Anspruch 10, wobei die Einstellung einer relativen Positionsbeziehung zwischen dem Sitzteil (83) und der Shampooschale (4) durch Bewegen des Sitzteils (83) rückwärts und vorwärts ausgeführt wird.

12. Haarpflege- oder Schönheitspflegestuhl nach Anspruch 10, wobei die Einstellung einer relativen Positionsbeziehung zwischen dem Sitzteil (83) und der Shampooschale (4) durch Bewegen der Shampooschale (4) rückwärts und vorwärts ausgeführt wird.

13. Haarpflege- oder Schönheitspflegestuhl nach Anspruch 10, wobei die Einstellung einer relativen Positionsbeziehung zwischen dem Sitzteil (83) und der Shampooschale (4) durch Ausführen gleichzeitiger Rückwärts- und Vorwärtsbewegung des Sitzteils (83) und Rückwärts- und Vorwärtsbewegung der Shampooschale (4) ausgeführt wird.

Revendications

1. Fauteuil pour salon de coiffure/institut de beauté comportant :

un châssis (1) ;
un moyen d'élévation (3) ;
un élément de montage de fauteuil (25, 26, 41) monté sur le châssis (1) au travers du moyen d'élévation (3) ;
un fauteuil (2) monté sur l'élément de montage de fauteuil (25, 26, 41) ; et
un bac à shampooing (4) monté sur le côté d'un dossier (27 ; 86) du fauteuil sur l'élément de montage de fauteuil (25, 26, 41).

2. Fauteuil pour salon de coiffure/institut de beauté selon la revendication 1, dans lequel le fauteuil (2) est formé sous la forme d'un lit et une partie concave (22) est formée sur un côté dans le sens longitudinal pour faciliter le mouvement consistant à monter sur le fauteuil (2) ou à en descendre alors qu'une partie enflée (23) est formée de l'autre côté à l'opposée de la partie concave.

3. Fauteuil pour salon de coiffure/institut de beauté selon la revendication 1, dans lequel le bac à shampooing (4) est monté pour effectuer un mouvement de va-et-vient par rapport à l'élément de montage de fauteuil (25, 26, 41).

4. Fauteuil pour salon de coiffure/institut de beauté selon la revendication 1, dans lequel un (des) élément (s) de support, dans lequel (lesquels) une partie de support pour nuque (51) permettant de supporter la partie arrière du cou d'un client et une partie de support pour tête (52) permettant de supporter l'arrière de la tête sont formées d'une seule pièce, est (sont) monté(s) sur une partie de support pour cou (49) dans le bac à shampooing (4) de manière rotative.

5. Fauteuil pour salon de coiffure/institut de beauté selon la revendication 1, dans lequel au moins un dossier (13) est monté sur le fauteuil (2) monté sur la face supérieure de l'élément de montage de fauteuil (25, 26, 41) de telle sorte qu'il est en mesure d'être relevé ou abaissé.

6. Fauteuil pour salon de coiffure/institut de beauté selon la revendication 1, dans lequel une partie siège (83) du fauteuil (2) est montée de manière mobile dans la direction de va-et-vient par rapport à l'élément de montage de fauteuil (25, 26, 41) et un dossier (86) est monté sur la partie siège (83) de telle sorte qu'il est en mesure d'être relevé ou abaissé.

7. Fauteuil pour salon de coiffure/institut de beauté selon la revendication 5 ou la revendication 6, dans lequel un élément de type coussin (9) est monté de manière coulissante sur une extrémité avant du dossier (86).

8. Fauteuil pour salon de coiffure/institut de beauté selon la revendication 6 ou la revendication 7, dans lequel une partie de support pour nuque (92) per-

mettant de supporter la partie arrière du cou d'un client est formée dans l'élément de type coussin (9).

9. Fauteuil pour salon de coiffure/institut de beauté selon la revendication 6 ou la revendication 7, dans lequel une partie de support pour nuque (92) permettant de supporter la partie arrière du cou d'un client et une partie de support pour tête (93) permettant de supporter l'arrière de la tête du client montée d'une seule pièce sur la partie de support pour nuque (92) sont formées sur l'élément de type coussin (9).

10. Fauteuil pour salon de coiffure/institut de beauté selon la revendication 7, dans lequel un moyen de détection de la hauteur d'un coussin, qui est la quantité de traction de l'élément de type coussin (9), est monté sur le côté du dossier (86) permettant de supporter l'élément de type coussin (9) de manière coulissante et en ajustant une relation de position relative entre la partie siège (83) et le bac à shampooing (4), de manière proportionnelle à la quantité de mouvement proportionnelle à la hauteur du coussin détectée par le moyen de détection de hauteur de coussin, l'élément de type coussin (9) est positionné au niveau d'une position prédéterminée du bac à shampooing (4) par un moyen de commande (10).

11. Fauteuil pour salon de coiffure/institut de beauté selon la revendication 10, dans lequel tout ajustement d'une relation de position relative entre la partie siège (83) et le bac à shampooing (4) est effectué en déplaçant la partie siège (83) en un mouvement de va-et-vient.

12. Fauteuil pour salon de coiffure/institut de beauté selon la revendication 10, dans lequel tout ajustement d'une relation de position relative entre la partie siège (83) et le bac à shampooing (4) est effectué en déplaçant le bac à shampooing (4) en un mouvement de va-et-vient.

13. Fauteuil pour salon de coiffure/institut de beauté selon la revendication 10, dans lequel tout ajustement d'une relation de position relative entre la partie siège (83) et le bac à shampooing (4) est effectué en exécutant simultanément le mouvement de va-et-vient de la partie siège (83) et le mouvement de va-et-vient du bac à shampooing (4).

FIG. 1

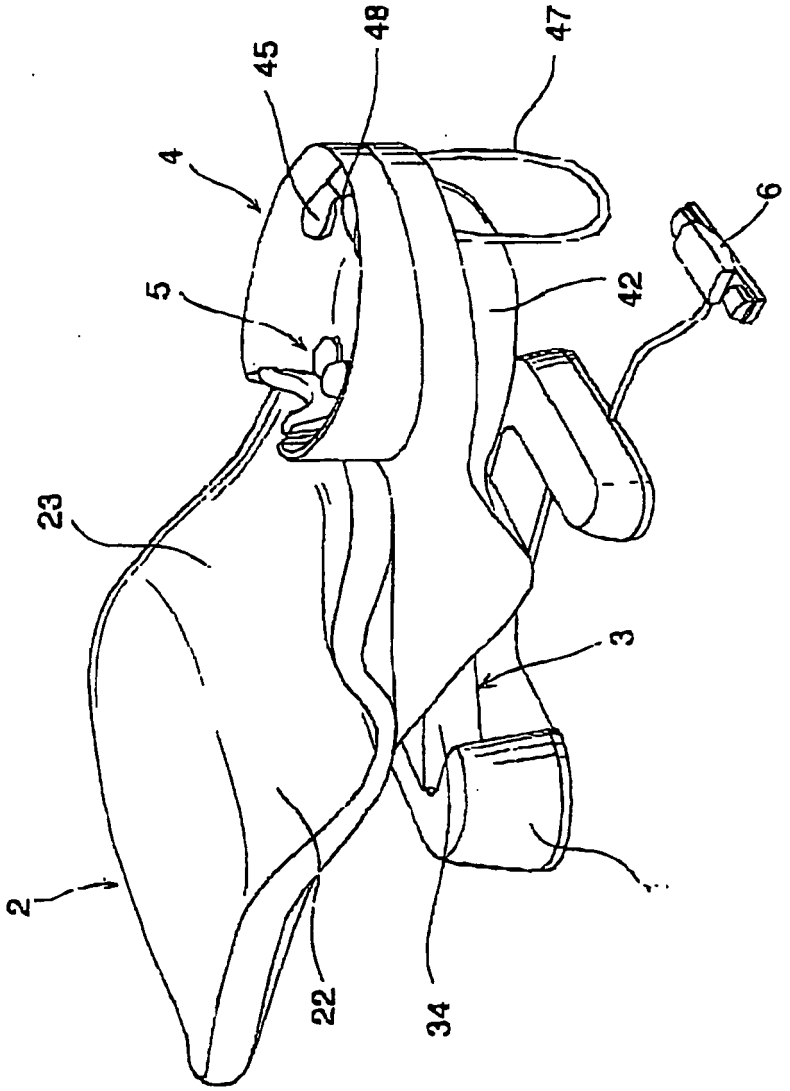

FIG.2

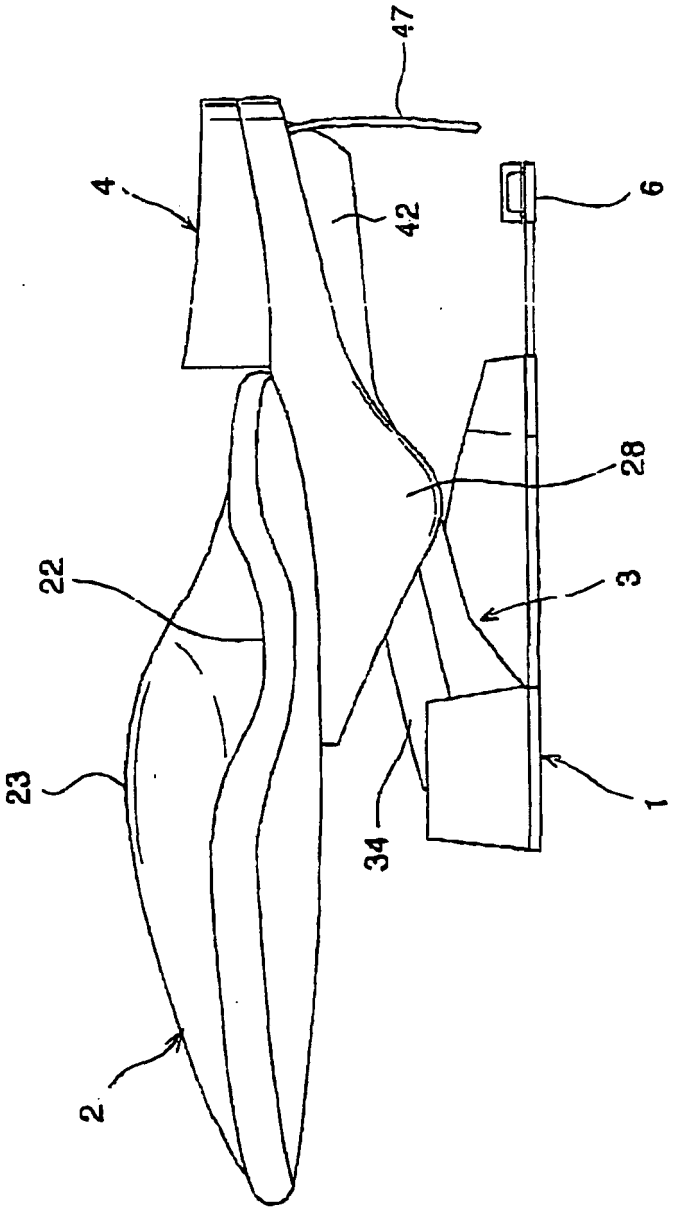

FIG.3

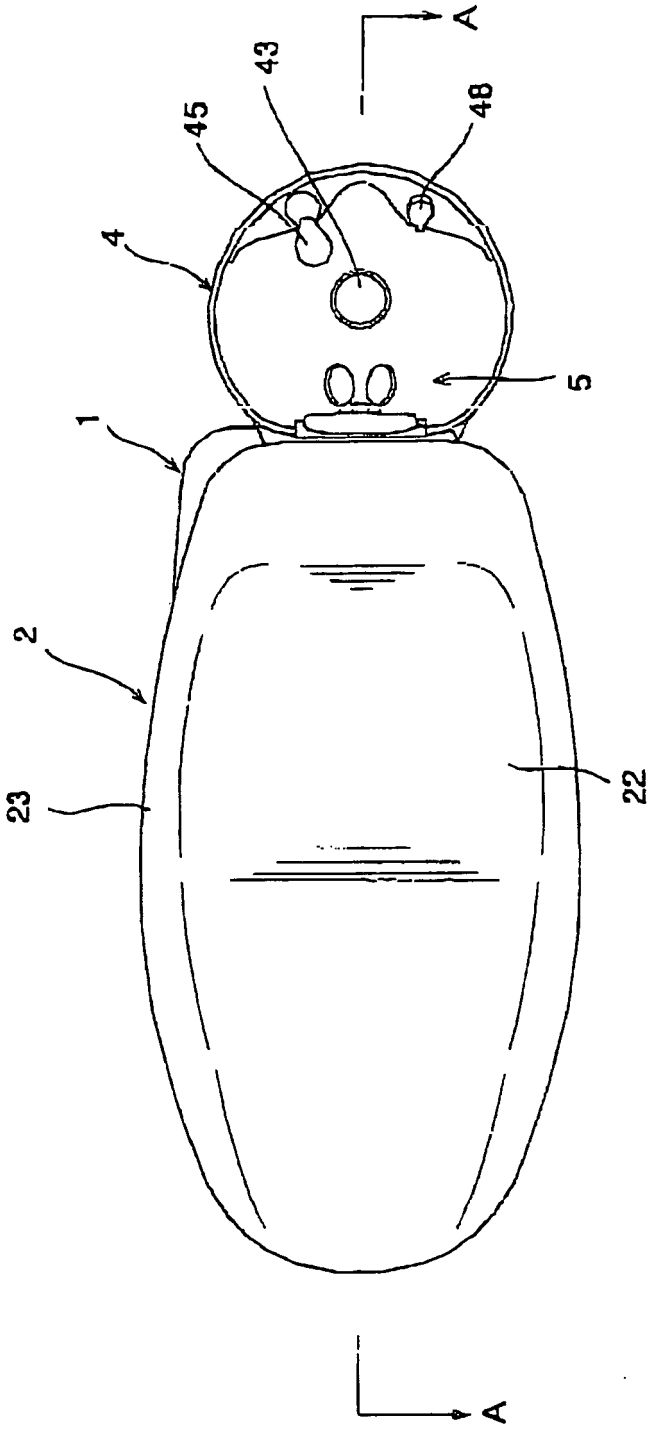

FIG.4

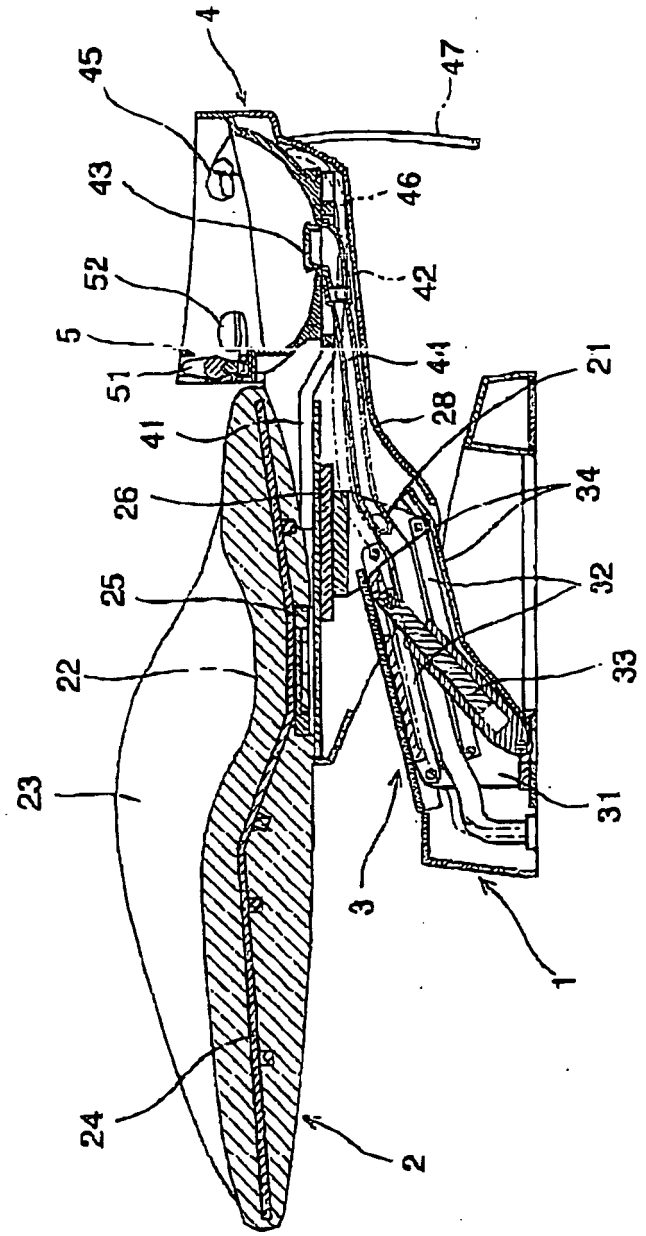

FIG.5

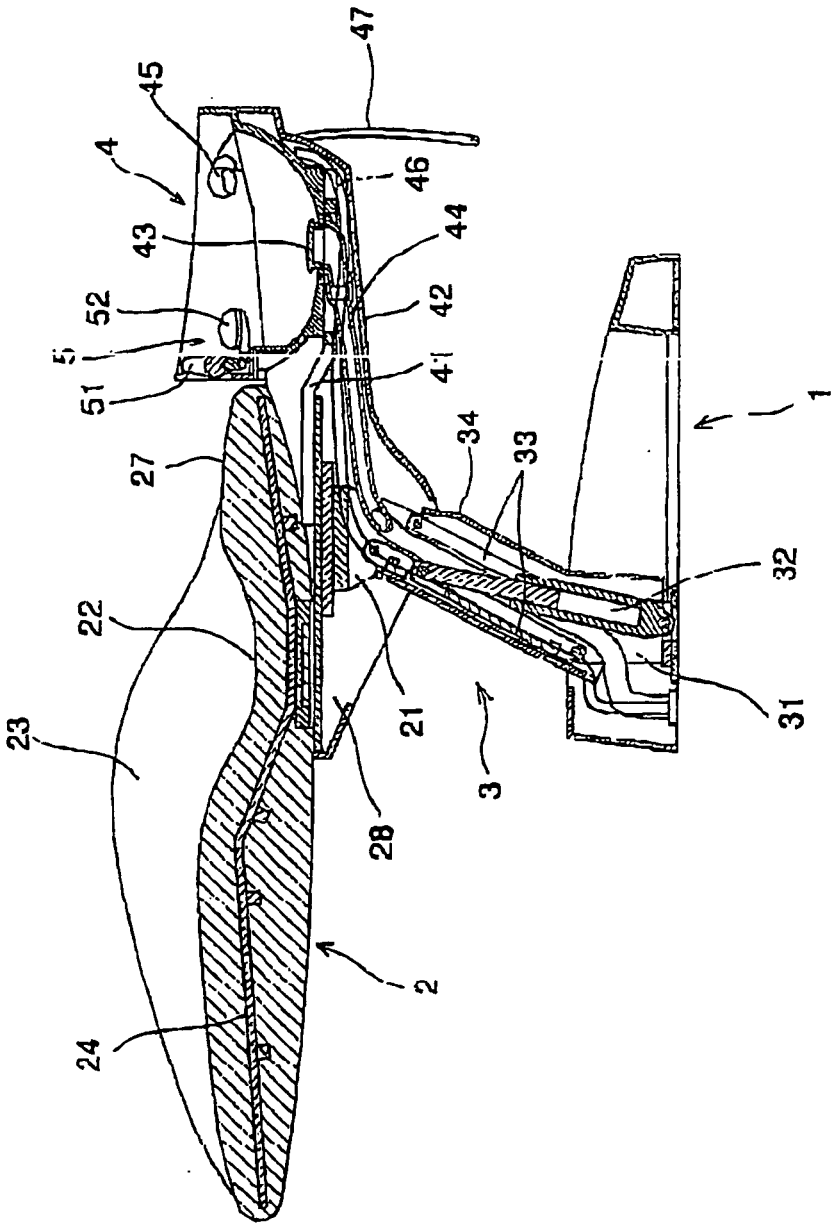

FIG. 6

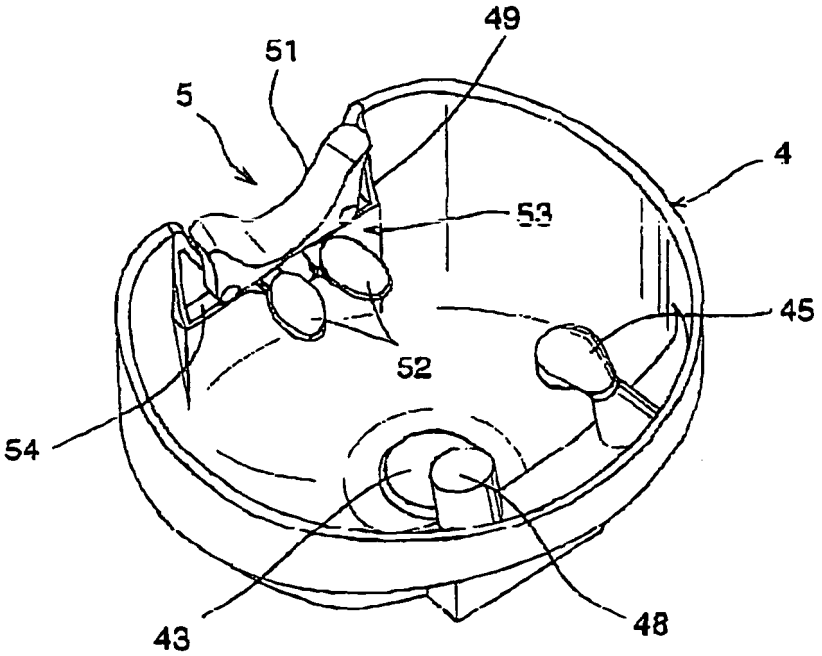

FIG. 7

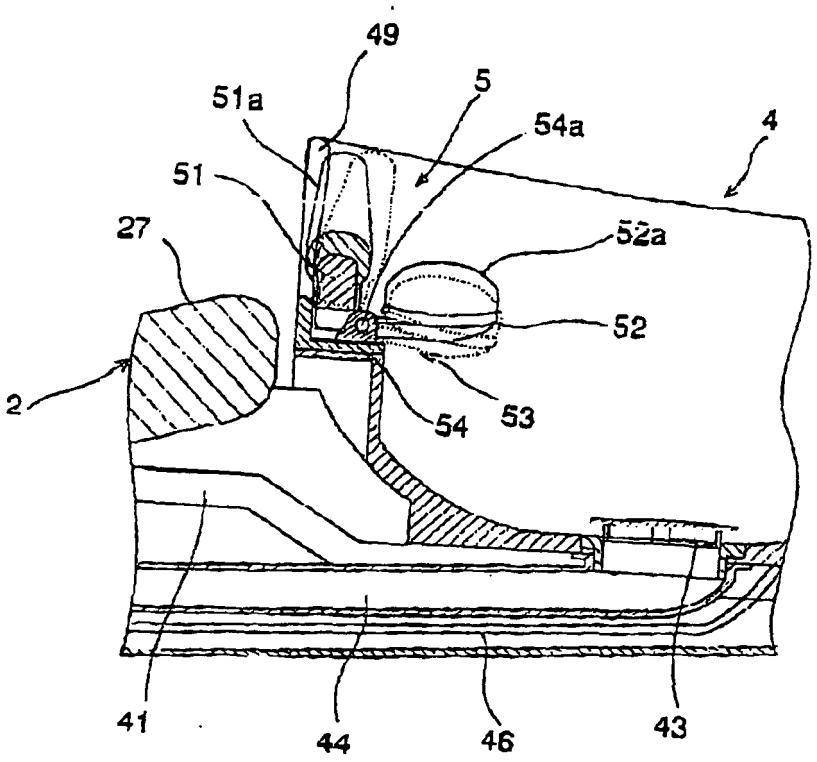

FIG.8(a)

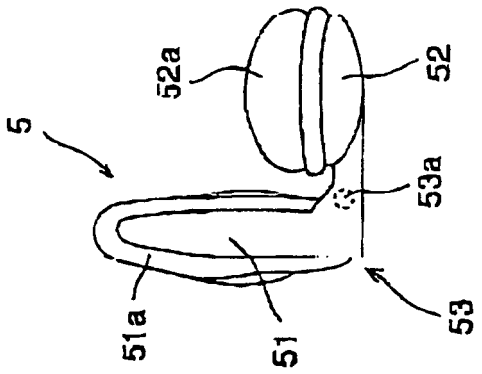

FIG.8(b)

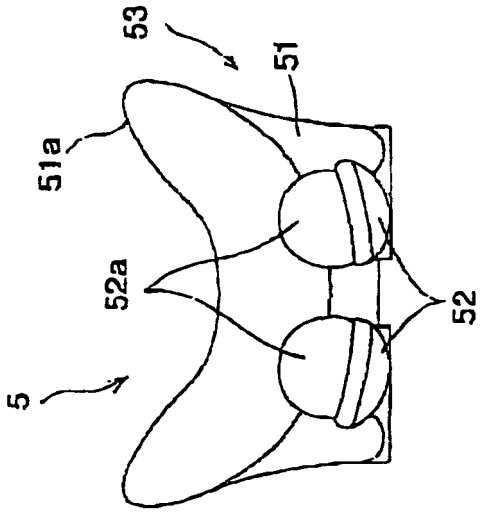

FIG.8(c)

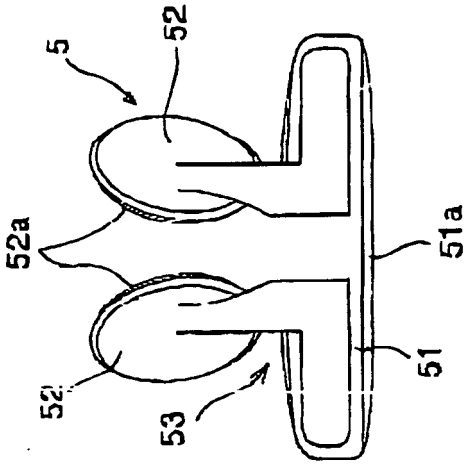

FIG.9

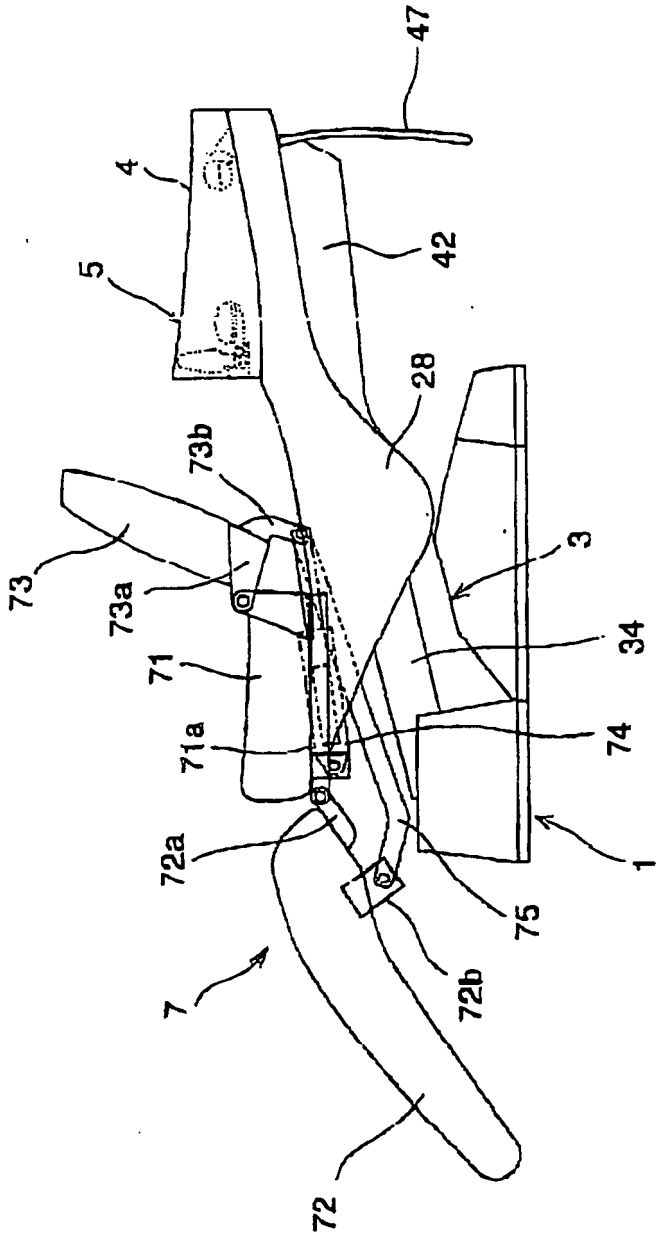

FIG.10

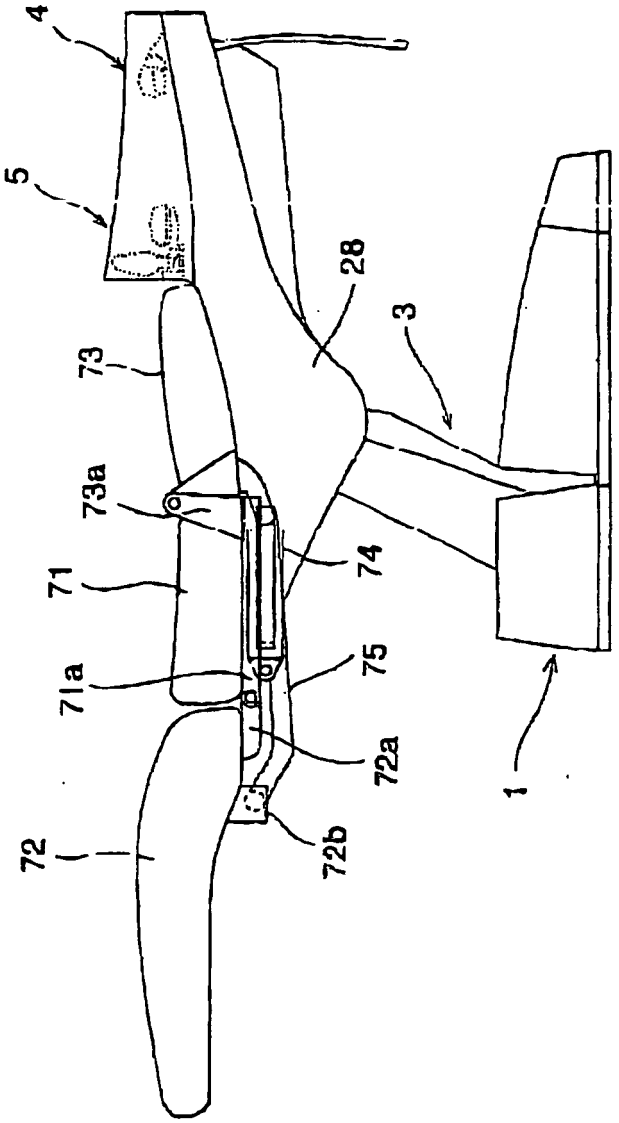

FIG.11

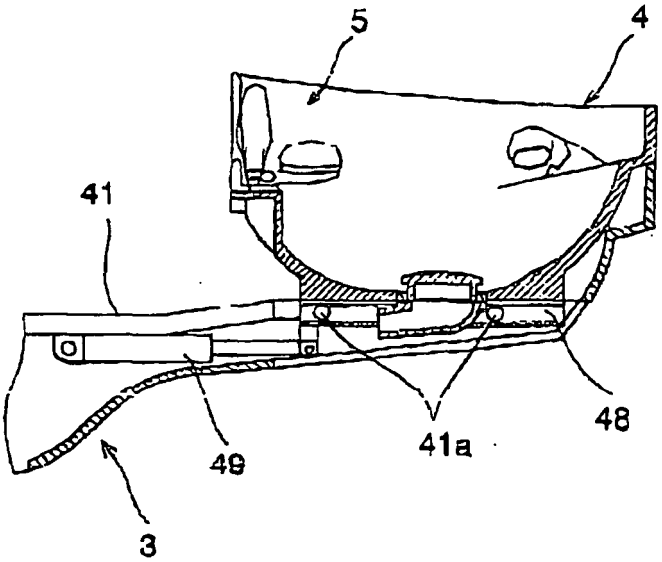

FIG.12

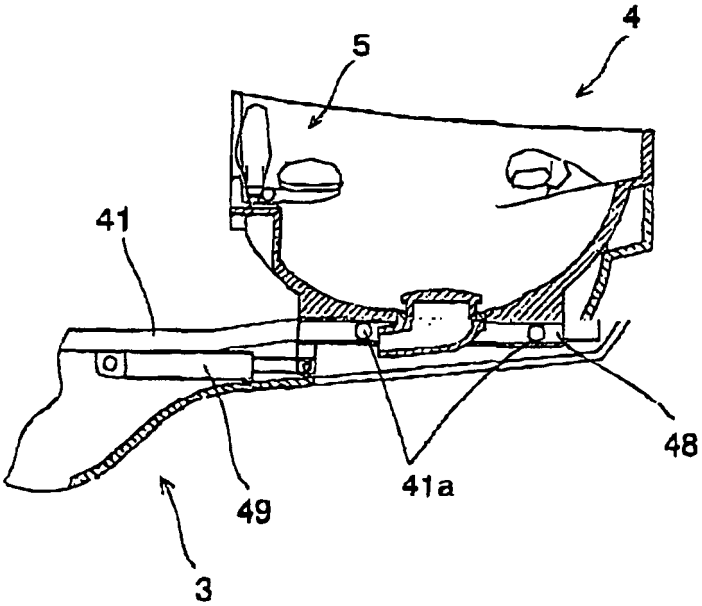

FIG.13

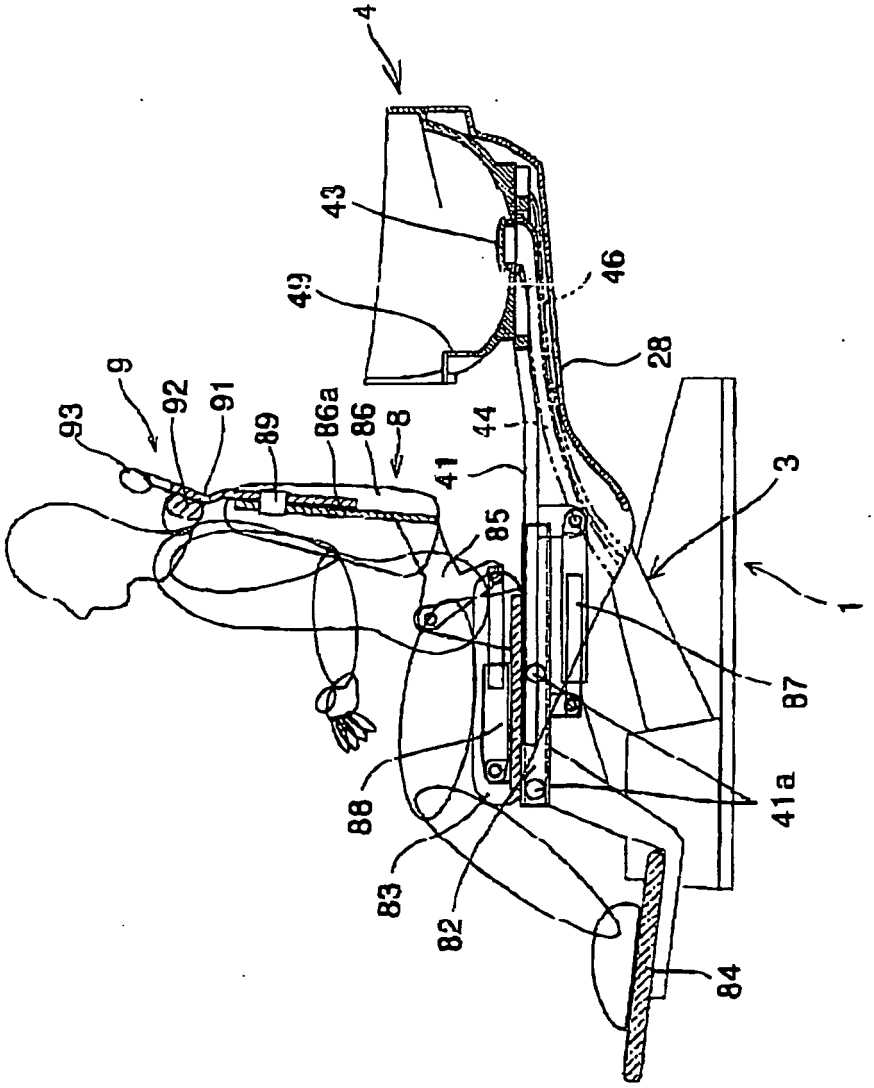

FIG.14

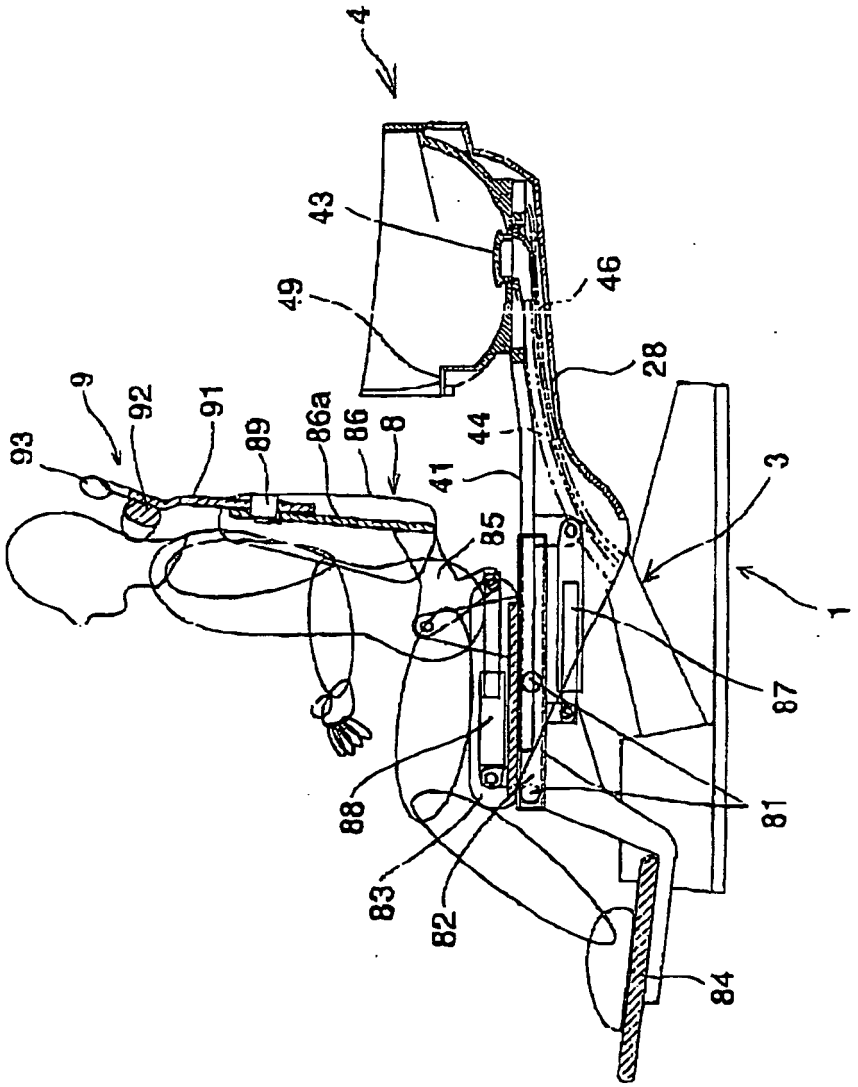

FIG.15

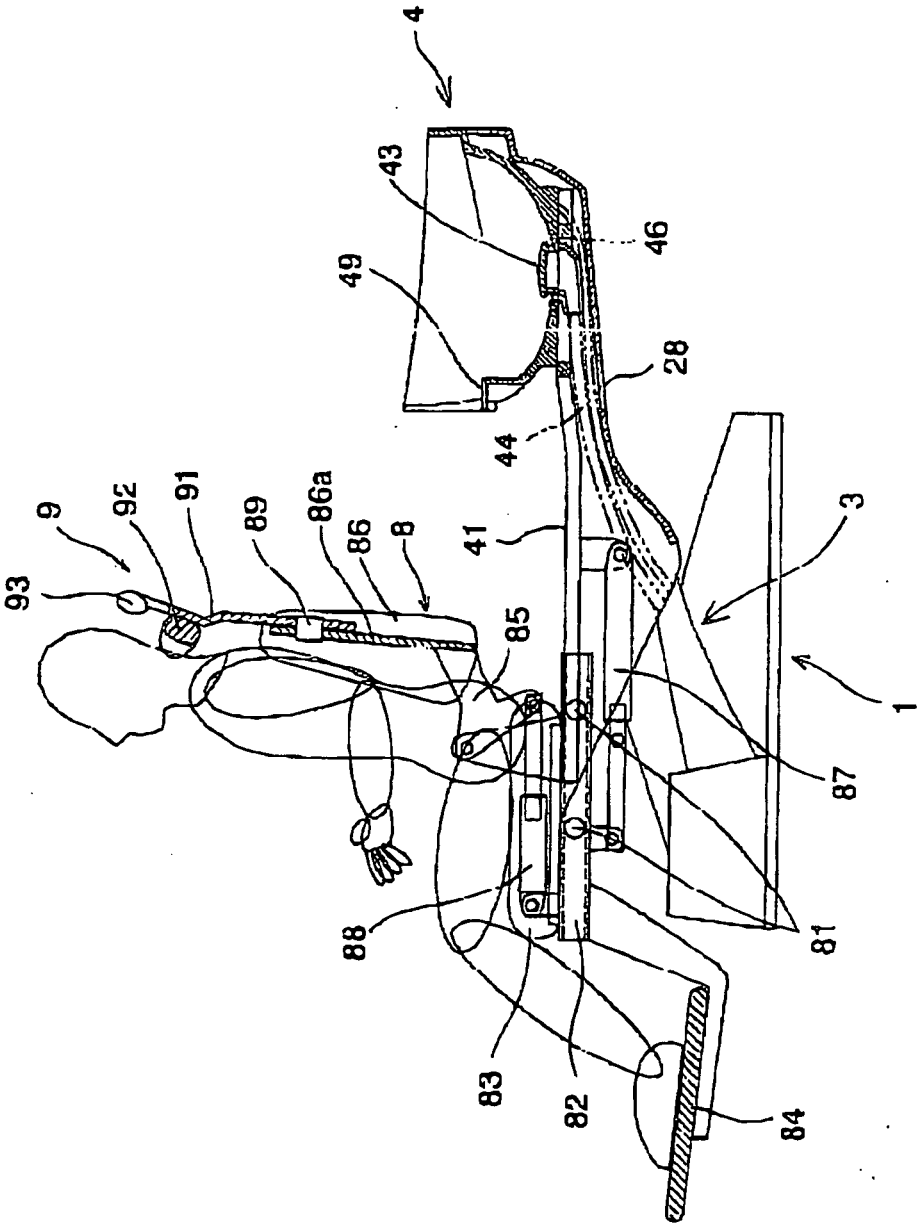

FIG.16

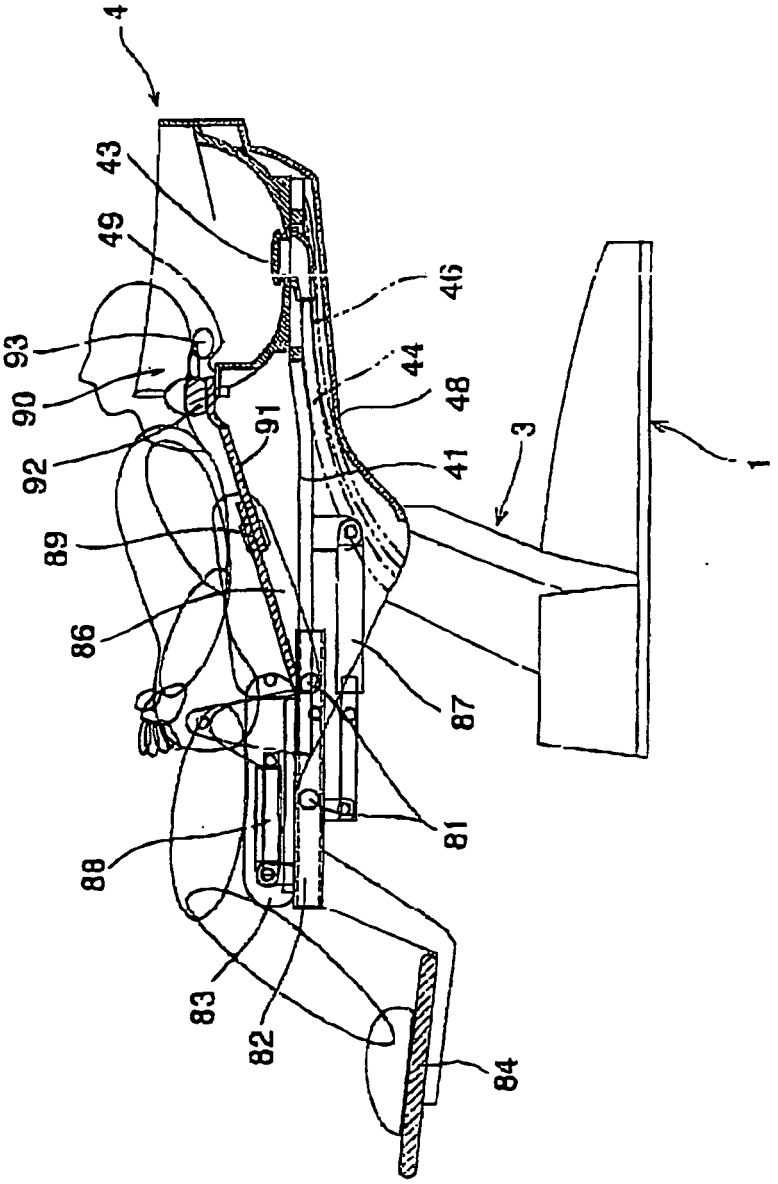

FIG.17

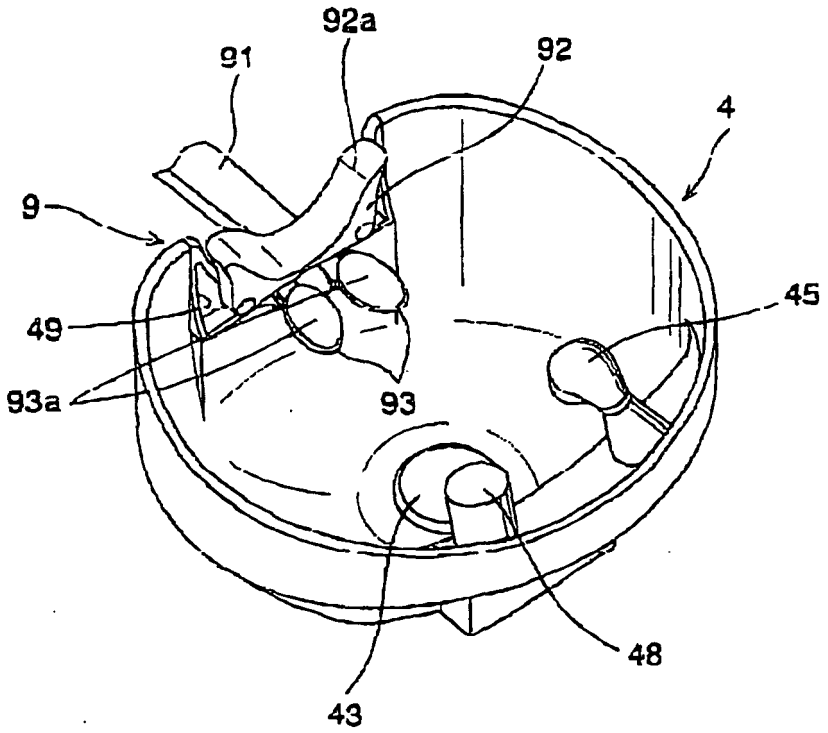

FIG. 18

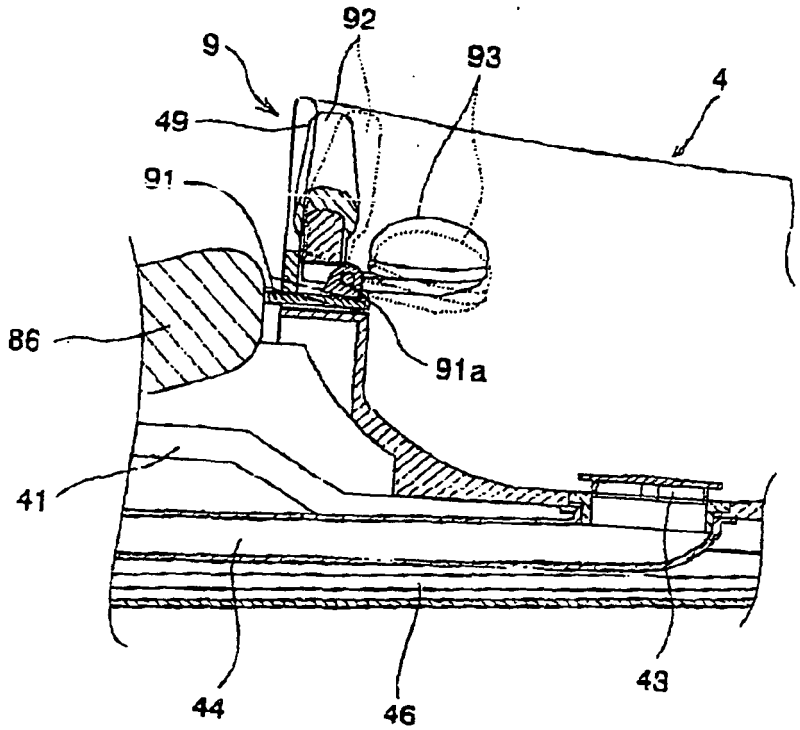

FIG.19(a)

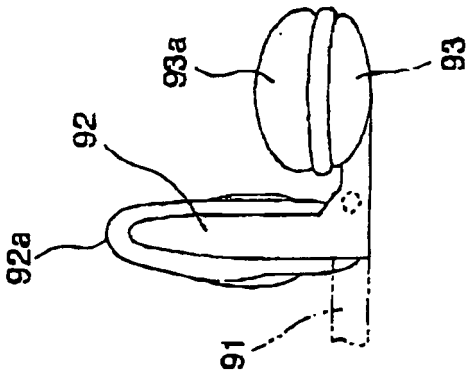

FIG.19(b)

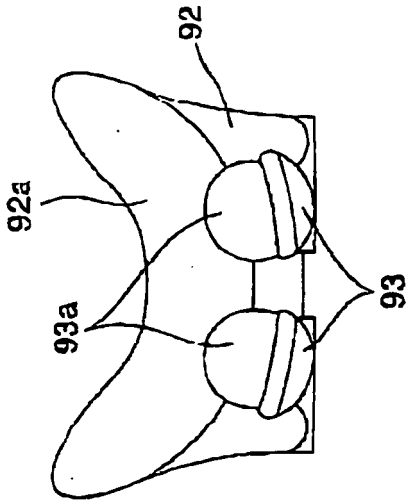

FIG.19(c)

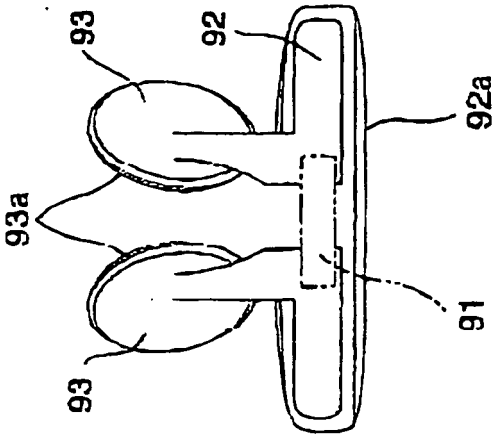

FIG.20

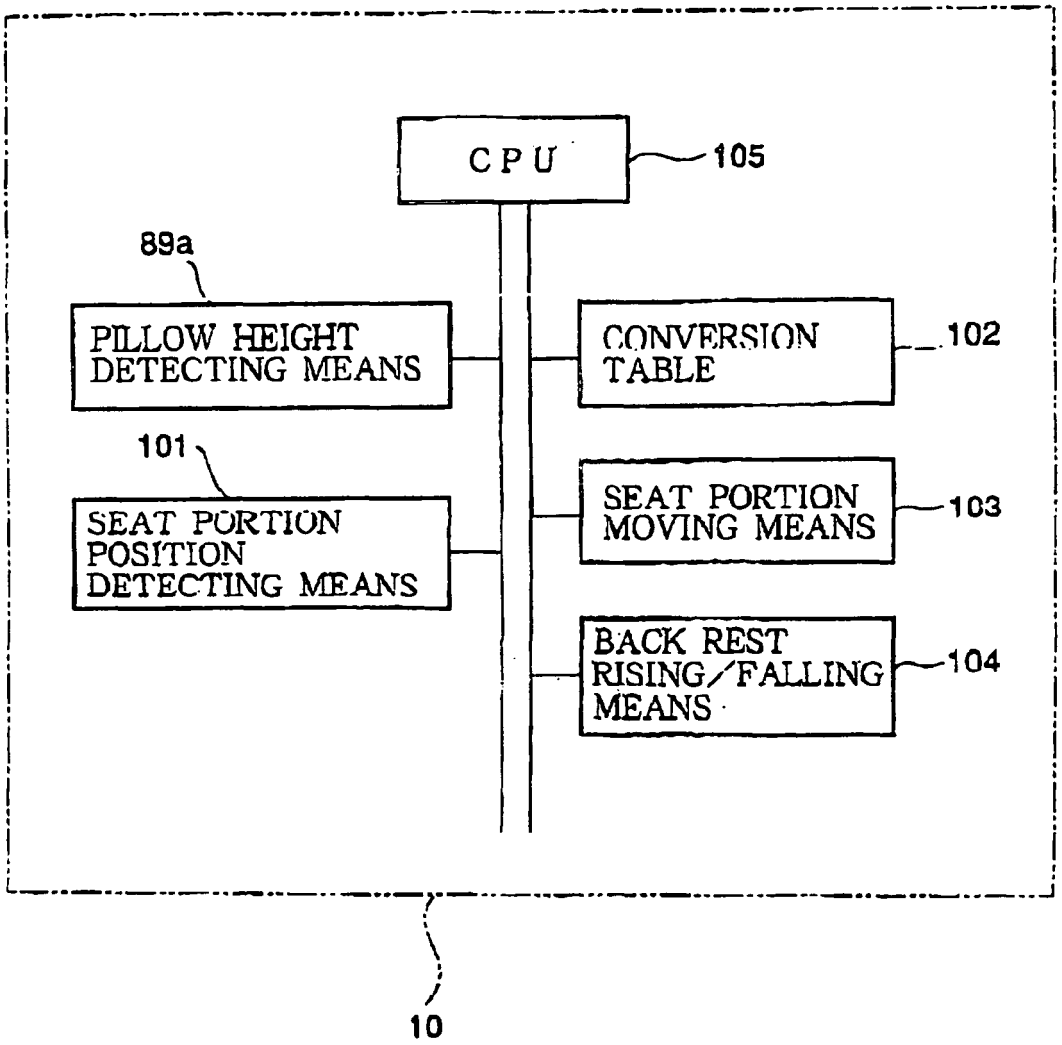
CPU
105
89a
PILLOW HEIGHT DETECTING MEANS
CONVERSION TABLE
102
101
SEAT PORTION POSITION DETECTING MEANS
SEAT PORTION MOVING MEANS
103
BACK REST RISING/FALLING MEANS
104
10

FIG.21

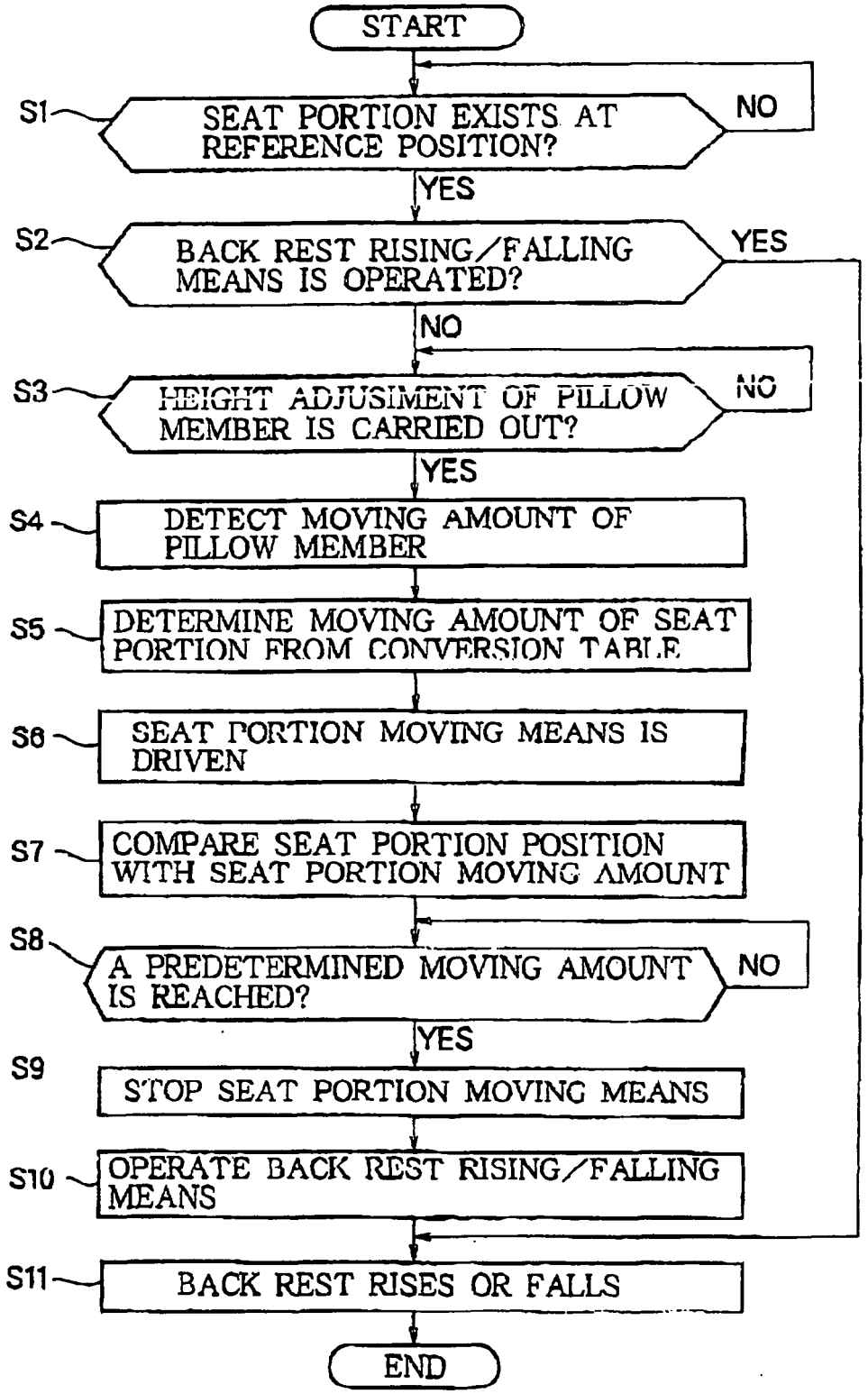
START
S1
SEAT PORTION EXISTS AT REFERENCE POSITION?
NO
YES
S2
BACK REST RISING/FALLING MEANS IS OPERATED?
YES
NO
S3
HEIGHT ADJUSTMENT OF PILLOW MEMBER IS CARRIED OUT?
NO
YES
S4
DETECT MOVING AMOUNT OF PILLOW MEMBER
S5
DETERMINE MOVING AMOUNT OF SEAT PORTION FROM CONVERSION TABLE
S6
SEAT PORTION MOVING MEANS IS DRIVEN
S7
COMPARE SEAT PORTION POSITION WITH SEAT PORTION MOVING AMOUNT
S8
A PREDETERMINED MOVING AMOUNT IS REACHED?
NO
YES
S9
STOP SEAT PORTION MOVING MEANS
S10
OPERATE BACK REST RISING/FALLING MEANS
S11
BACK REST RISES OR FALLS
END

FIG.22

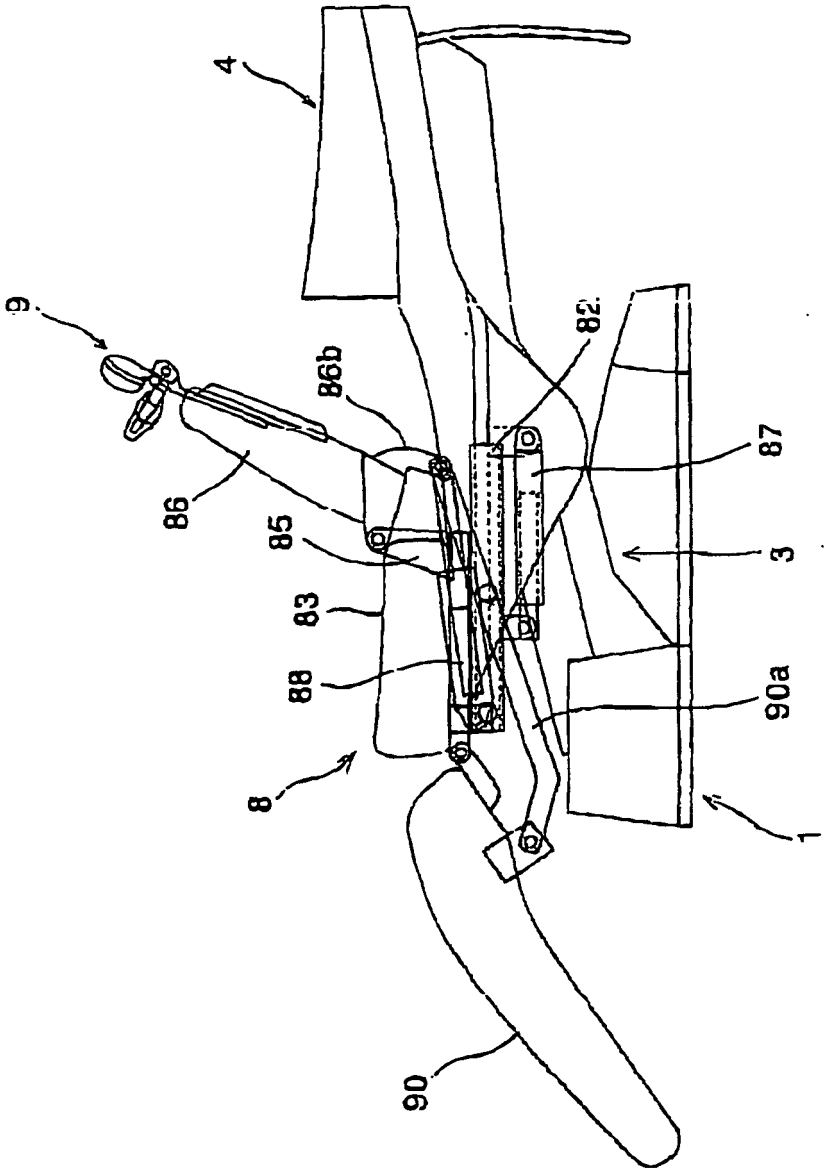

FIG.23

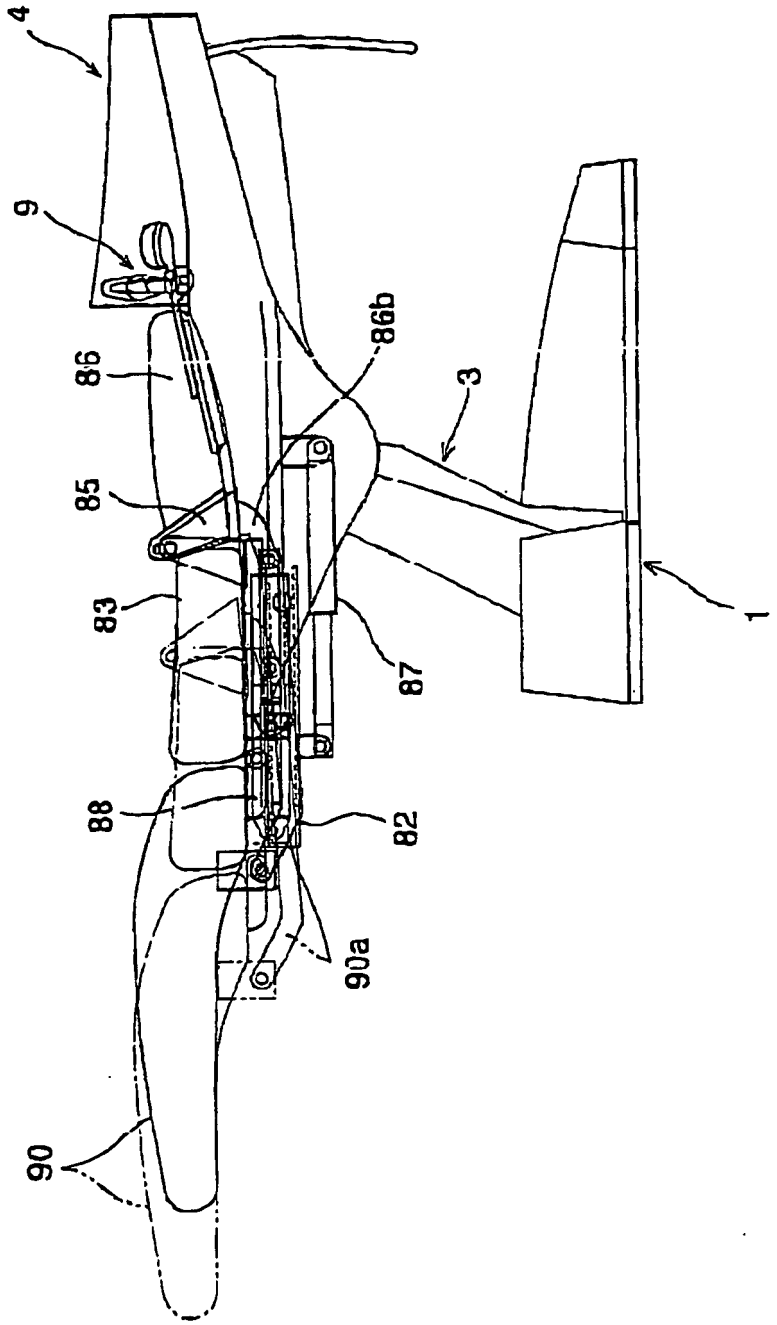

FIG.24

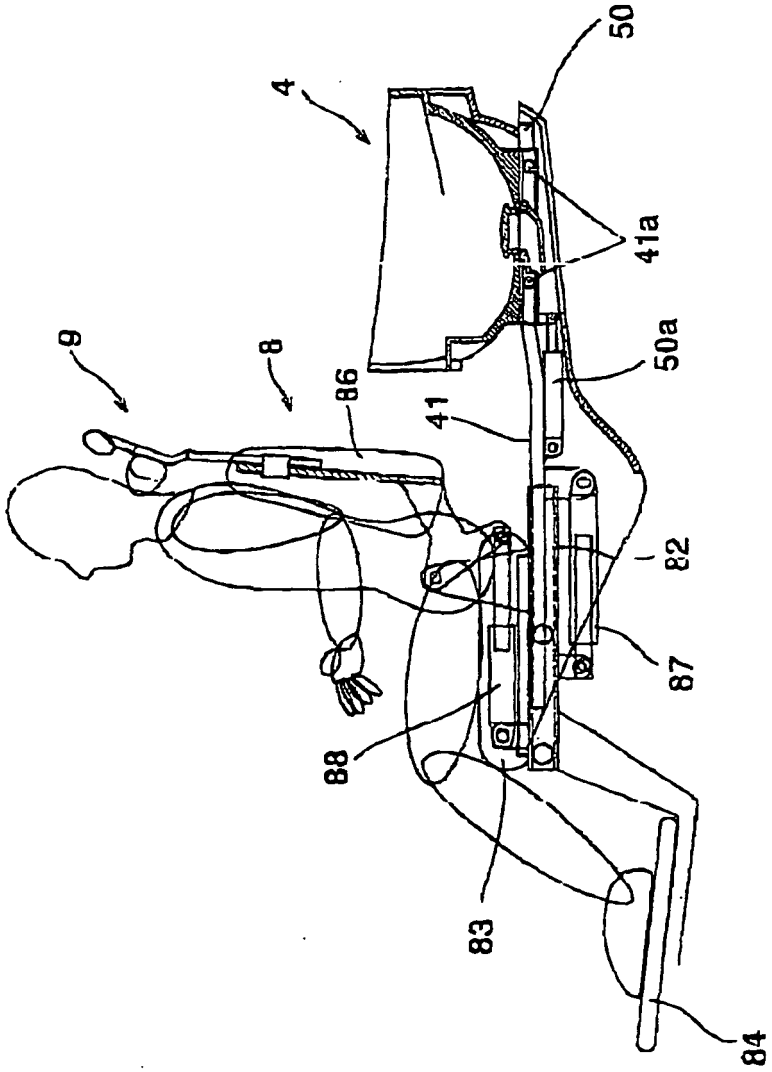

FIG.25

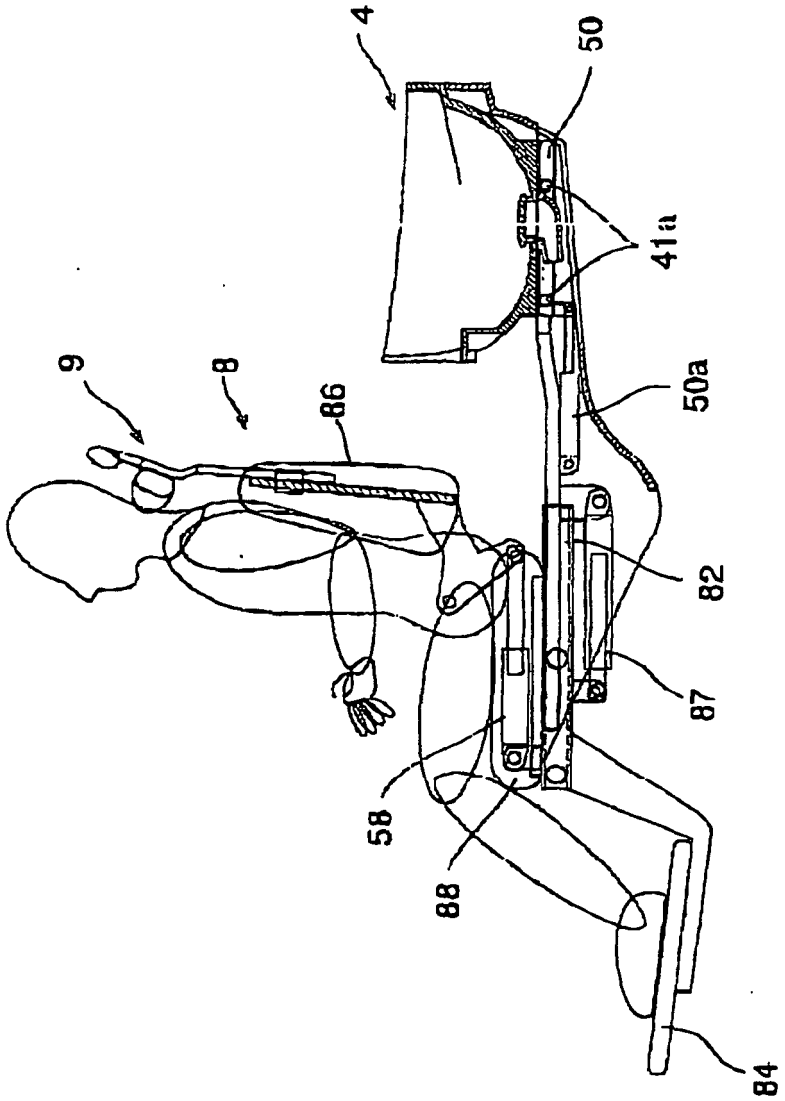

REFERENCES CITED IN THE DESCRIPTION

This list of references cited by the applicant is for the reader's convenience only. It does not form part of the European patent document. Even though great care has been taken in compiling the references, errors or omissions cannot be excluded and the EPO disclaims all liability in this regard.

Patent documents cited in the description

- JP 2002102001 A **[0002]**