(19) Europäisches Patentamt
European Patent Office
Office européen des brevets

(11) EP 2 186 944 B1

(12) **EUROPEAN PATENT SPECIFICATION**

(45) Date of publication and mention of the grant of the patent:
29.05.2013 Bulletin 2013/22

(51) Int Cl.:
E02D 5/52 *(2006.01)*

(21) Application number: **09175649.4**

(22) Date of filing: **11.11.2009**

(54) **Locking assurance construction**

Sperrsicherungskonstruktion

Construction assurant un verrouillage

(84) Designated Contracting States:
AT BE BG CH CY CZ DE DK EE ES FI FR GB GR HR HU IE IS IT LI LT LU LV MC MK MT NL NO PL PT RO SE SI SK SM TR

(30) Priority: **17.11.2008 FI 20080367 U**

(43) Date of publication of application:
19.05.2010 Bulletin 2010/20

(73) Proprietor: **Leimet Oy**
27230 Lappi (FI)

(72) Inventor: **Männistö, Timo**
FI-27670, Mannila (FI)

(74) Representative: **Laako, Tero Jussi**
Berggren Oy Ab
P.O. Box 16
00101 Helsinki (FI)

(56) References cited:
EP-A2- 1 582 633 **DE-U1- 8 504 456**
SE-C2- 508 943

Note: Within nine months of the publication of the mention of the grant of the European patent in the European Patent Bulletin, any person may give notice to the European Patent Office of opposition to that patent, in accordance with the Implementing Regulations. Notice of opposition shall not be deemed to have been filed until the opposition fee has been paid. (Art. 99(1) European Patent Convention).

EP 2 186 944 B1

Printed by Jouve, 75001 PARIS (FR)

Description

[0001] The invention relates to a locking assurance construction in an extension joint for precast reinforced concrete piles, with a first reinforced concrete pile applied thereto and a second reinforced concrete pile having, at their interconnectble ends, lock housings provided with transverse holes, and lock bars provided with transverse holes, whereby the lock housings and lock bars of end-to-end applied piles extend one within the other in a longitudinal direction of the piles with the transverse holes thereof in line with each other, as well as insert pins crosswise of the piles and extending through these aligned transverse holes.

[0002] In the extension joints of precast reinforced concrete piles, an effort has been made to secure these end-to-end joints in various ways, in other words an effort has been made to provide such locking mechanisms which do not disengage upon hammering into the ground or vibration. Publication FI-76169 describes a device for joining together building units, comprising a lock housing positioned in one building unit, a peg projecting from the other building unit and arranged to be inserted into the lock housing in the joined position of the units, the free end of said peg being provided with a flange, and a locking means which is arranged to be inserted into the lock housing for locking the peg in the housing in the direction of the longitudinal axis thereof. In this case, the locking means comprises two branches arranged to be positioned on different sides of the peg, the lock housing being provided with a guide surface for turning the branches towards each other after they have passed the peg. For this reason, the guide surface of the lock housing comprises a substantially continuous arcuate surface positioned behind the peg as viewed in the direction in which the locking means is knocked in place. Publication SE-508943 describes a stiff extension joint for connecting concrete piles end to end, in which each end of the concrete pile that comes to the joint comprises a base plate that corresponds to the cross-section of the pile, joining members being attached to the base plate which consist: of projecting locking bars comprising a wide head which comprises at least one stop face that points towards said base plate; of locking blocks on the counterpart which are provided with a cavity that receives the locking bar, and with a groove transversal to the length of the locking bars, the groove extending around the cavity in a toroid-like way, and with a hole that extends from this groove at least approximately tangentially. The joining members further include an insert pin that is driven into the hole when the pile joint is made so that it turns around the locking bar in the cavity, guided by the circumferential surface of the groove, whereby it is simultaneously locked permanently in place because of plastic deformation. The cross-section of the insert pin is uniform at least along the essential part of its length, beginning from the end of the insert pin which is pushed ahead through the hole to the groove, and that this cross-section remains at least approximately the same throughout this part of the length, whereby the insert pin clamps the parts of the pile joint together while penetrating to the groove between the stop face of the locking bar and the stop face of the locking block, and, at the same time, the locking means is bent under the effect of the curved surface of the groove. Thus, in both of these publications, the stationary position of a locking means or respectively an insert pin is assured by means of itself having a sufficient plastic strain, which effectively disallows a dislodgement of the locking means or insert pin. In both of these publications, a major force is required for striking the insert pins all the way in.

[0003] Publication FI-20020172 describes a locking assurance feature in an extension joint for precast reinforced concrete piles. For the extension joint, the ends of pile segments include lock housings provided with transverse holes, and lock bars or joint shackles as well as transverse grooves or transverse slots in communication therewith. The lock housings and lock bars or joint shackles present at the abutting ends of piles extend lengthwise of the piles one within the other or respectively in an overlapping manner, establishing junctions at which the transverse holes thereof are in line with each other, and insert pins extending crosswise of the piles and through the aligned transverse holes. For the purpose of locking assurance, the cited publication proposes that the transverse grooves or transverse slots extend through a pile, either from a lateral flank of the pile to the opposite lateral flank or from a lateral flank of the pile to an adjoining lateral flank, and that said plate segments extend at both outer ends of each transverse groove or transverse slot over part of the cross-section of the transverse groove or respectively the transverse slot and are adapted to yield by deflection upon striking the insert pin through the transverse holes presently in said alignment with each other.

[0004] A locking assurance feature according to the invention is characterized by what is defined in the characterizing clause of claim 1.

[0005] The most important benefit of the invention is that, when using components of the invention capable of providing a locking assurance function, neither any accessories other than basically conventional insert pins, nor any extra operations other than per se conventional home-striking of the insert pins, are needed at the installation site in the process of making an extension joint for piles. Nonetheless, the immobilization of insert pins is secured, i.e. the inadvertent dislodgement thereof is precluded, as a result of strain taking place in a locking ring of the invention. Hence, the extension joint does not disengage as interconnected pile segments are driven into the ground by ramming or vibration.

[0006] The invention will now be described in detail with reference to the accompanying drawings.

Fig. 1 shows schematically two reinforced concrete piles, i.e. precast pile segments, connectible to each

other end to end by means of an extension joint, in an axonometric exploded view.

Fig. 2 shows, in an extension joint of the invention for reinforced concrete piles or precast pile segments, a lock housing and a lock bar, which lie one within the other in a longitudinal direction of the piles, as well as a crosswise insert pin extending through transverse holes therein, in a section plane I-I of fig. 1, which is longitudinal and extends across the insert pin's center axis.

Fig. 3 shows a stationary locking ring for the lock housings in an extension joint of the invention for reinforced concrete piles or precast pile segments, in a view along a direction II-II of fig. 2, which is perpendicular to the ring's plane and parallel to the insert pin's length.

Fig. 4 shows, in an extension joint of the invention, an alternative shape for the internal end of an insert pin, in a view of an area III of fig. 3 from outside the insert pin.

[0007] In each extension joint for per se known and commonly employed precast reinforced concrete piles, the engagement of abutting and interconnectible ends 11, 12 of a first reinforced concrete pile P1 applied to the joint and a second reinforced concrete pile P2 is effected by joining members. The invention relates to such joining members for reinforced concrete piles which comprise lock housings 2a provided with transverse holes 3a, and lock bars 2b provided with transverse holes 3b. In order to provide a sufficient stiffness for the extension joint, i.e. to make it capable of withstanding a sufficient deflection while being driven into the ground, said extension joint comprises a plurality of nested lock housing-lock bar pairs at a distance from the pile's center axis and at a distance from each other, as can be seen in fig. 1. The mutual extension joint of reinforced concrete piles is established in such a way that the lock bars 2b at an end 21 of the reinforced concrete pile P1 are inserted inside the lock housings 2a and vice versa in a lengthwise direction K of the piles. Both of the pile ends are typically provided with both lock housings 2a and lock bars 2b in such a disposition that the lock bars are installable in register with and inside the lock housings. The extension joint involves the use of insert pins 16, which are struck forcefully, and in an inward striking direction T lateral to a longitudinal direction Lp of the piles, through the mutually aligned transverse holes 3a and 3b of the lock housings and lock bars. Thereby, the extension joint takes up the first reinforced concrete pile P1 and the second reinforced concrete pile P2, and the extension joint is established by means of the nesting lock housings 2a and lock bars 2b at the connectible ends 11, 12 thereof, as well as by means of the insert pins 16. To enable a pass-through of the insert pins, the lock housings 2a include transverse holes 3a and the lock bars 2b include transverse holes 3b. The lock housings and lock bars of abutting piles extend in the longitudinal direction Lp of the piles in a nested configuration and the transverse holes 3a and 3b thereof settle in alignment with each other, whereby the insert pins 16 extend through these aligned transverse holes 3a, 3b in a direction crosswise of the piles, thus locking the reinforced concrete piles or precast pile segments to each other.

[0008] The extension joint for precast reinforced concrete piles is further provided with a locking assurance - or locking safety - construction 1, which is used for disallowing a dislodgement of the insert pins - in a direction opposite to the inward striking direction T - from a continuous aperture established by the transverse holes 3a and 3b of the lock housings and lock bars upon driving the interconnected reinforced concrete piles, i.e. a precast pile, into the ground by ramming or vibration.

[0009] According to the invention, the locking assurance construction 1 comprises a locking ring 4, which is retained stationary in each internal extension 13 of the transverse holes 3a in the lock housings 2a, and which includes a central aperture 15. The central aperture 15 can be circular, angular, or elliptical, depending on whether an inner end 7 of the insert pin 16 is circular, polygonal, or elliptical. Thus, the central aperture 15 has its outline adapted to match a cross-sectional shape of the inner end 7. The lock housings 2a, which lie inside the ends 11, 12 of the respective reinforced concrete piles P1 and P2 and consequently surrounded by concrete, have the transverse holes thereof extended by the above-mentioned inner extension 13 and an outer extension 14, both preventing pile-casting concrete B from penetrating into a transverse hole in the lock housing and keeping a passage for the insert pin 16 open to an outer face 18 of the pile and through the lock housing. More specifically, the outer extension 14 extends in line with the lock housing's 2a transverse hole 3a to the outer pile face 18, and the inner extension 13, together with an end cap 8, plugs the lock housing's 2a transverse hole 3a at its internal end. Likewise, the locking ring's 4 outline, establishing its outer diameter, can be circular, polygonal, or elliptical. The locking ring 4 has an outer diameter D1 and the central aperture 15 has a bore diameter D3. The locking ring 4 is further provided, between the outer diameter D1 and an inner diameter D2, with a continuous peripheral segment 5, as well as between the inner diameter D2 and the central aperture's 15 bore diameter D3, with spring tabs 6 separated from each other by radial slots 9, as visualized in fig. 3. The insert pins 16 include a cylindrical or cross-sectionally polygonal inner end 7, having an engagement diameter D4 which is less than the locking ring's inner diameter D2 and more than the locking ring's bore diameter D3. In this context, the term cylindrical refers both to the shape of a circular cylinder and that of an elliptic cylinder. Hence, the insert pin 16 is struck in the inward striking direction T and the inner end 7 first through the outer extension 14, the transverse

holes 3a and 3b, and further to the inner extension 13 in which the locking ring 4 is present. More specifically, at least the insert pin's inner end 7 penetrates inside the inner extension 13. Because the inner end's 7 diameter D4 is more than the bore diameter D3 of the locking ring's central aperture 15, but less than the locking ring's inner diameter D2, a penetration of the inner end 7 in the inward striking direction T through the locking ring's central aperture 15 results in a deflection of the spring tabs 6 also in the inward striking direction T, as depicted in fig. 2. The concept "diameter" refers in this specification to the diameter of a circular form and to all diagonal dimensions extending by way of the center of any polygonal shape, In this context, explicitly one diagonal of a non-circular inner end, such as a diagonal dimension equal to the lateral length, is compared with the respective diagonal of a non-circular central aperture, such as with a diagonal dimension equal to its lateral length.

[0010] The material of the insert pins 16 is adapted to have a hardness lesser than that of the material of the locking rings 4. Hence the locking ring's spring tabs 6 have their inner lips 17 biting into the insert pin's 16 cylindrical inner end 7 as the insert pin is in a position where it has been struck through the mutually aligned transverse holes 3a and 3b, the spring tabs 6 being in a deflected condition as described above. This biting action of the inner lips 17 is depicted in fig. 2. For this purpose, the locking ring's 4 spring tabs 6 have such a thickness S that it enables a deflection of the spring tabs as the insert pin's 16 cylindrical inner end 7 is struck into the locking ring's aperture 15. Typically, the spring tabs 6 are not less than 0.5 mm and not more than 2 mm in thickness S, but it is obvious that the design depends on the locking ring's 4 material, as well as slightly also on the insert pin's 16 material. It is also possible to provide the insert pin's inner end 7 with a peripheral groove 20, into which the spring tabs' 6 inner lips 17 penetrate when the insert pin is in a position where it has been struck through the mutually aligned transverse holes 3a and 3b, the spring tabs 6 being in a deflected condition, as depicted in fig. 4. In the case of using a peripheral groove 20, the relationship between the hardness of the insert pins' material and that of the locking rings' material does not have a substantial significance.

[0011] The locking ring 4 is in a fixed stationary position in the internal extension 13. More specifically, the locking ring 4 is disposed between the actual internal extension 13, which is a tubular component, and the end cap 8. The internal extension 13 includes a broached portion 19, extending from its inner end towards the outer face and having a diameter substantially equal to the locking ring's outer diameter D1, whereby the locking ring 4 can be accommodated in this broached portion 19. The end cap's 8 outer diameter is also in the same order of magnitude as the locking ring's outer diameter D1. Thus, the end cap 8 can be locked in place within the broached portion 19 either by a press fit or by a weld not shown in the figures. In any case, this enables retaining the locking ring 4 stationary within the internal extension 13 as the end cap 8 holds the locking ring 4 is stationary against the internal extension. It is obvious that there are also other ways of fixing the locking ring 4 immovably in the internal extension 13.

Claims

1. A locking assurance construction in an extension joint for precast reinforced concrete piles, with a first reinforced concrete pile (P1) and a second reinforced concrete pile (P2) applied thereto having, at their interconnectible ends (11, 12), lock housings (2a) provided with transverse holes (3a), and lock spindles (2b) provided with transverse holes (3b), whereby the lock housings and lock spindles of end-to-end applied piles extend one within the other in a longitudinal direction (Lp) of the piles with the transverse holes (3a and 3b) in line with each other, as well as insert pins (16) crosswise of the piles and extending through these aligned transverse holes (3a, 3b), **characterized in that** said locking assurance construction comprises:

   - a locking ring (4) stationary in each internal extension (13) of the transverse holes (3a) in the lock housings (2a), said ring having an outer diameter (D1) and a bore diameter (D3), and said locking ring having, between the outer diameter (D1) and an inner diameter (D2), a continuous peripheral segment (5) as well as, between the inner diameter (D2) and the bore diameter (D3) of a central aperture (15), spring tabs (6) separated from each other by radial slots (9), and
   - in the insert pins (16), a cylindrical or cross-sectionally polygonal inner end (7), having an engagement diameter (D4) which is less than the locking ring's inner diameter (D2) and more than the locking ring's bore diameter (D3).

2. A locking assurance construction according to claim 1, **characterized by** further comprising end caps (8), each of which plugs the transverse hole (3a) in each internal extension (13) and retains the locking ring (4) stationary against the internal extension.

3. A locking assurance construction according to claim 1 or 2, **characterized in that** the insert pins' (16) material has a hardness which is lower than that of the locking rings' (4) material, whereby the locking ring's spring tabs (6) have their inner lips (17) biting into the insert pin's (16) inner end (7) when the insert pin is in a position struck through the mutually aligned transverse holes (3a and 3b), thus resulting in a deflected condition of the spring tabs (6).

4. A locking assurance construction according to claim 1 or 2 or 3, **characterized in that** the spring tabs (6) of a locking ring (4) has a thickness (S) which causes a deflection of the spring tabs when the cylindrical inner end (7) of an insert pin (16) is struck into the locking ring's central aperture (15); that the thickness (S) is not less than 0.5 mm; and that the thickness (S) is not more than 2 mm.

5. A locking assurance construction according to any of the preceding claims, **characterized in that** the inner end (7) of the insert pins (16) is provided with a peripheral groove (20) for the inner lip (17) of a locking ring's spring tabs (6).

Patentansprüche

1. Sperrsicherungskonstruktion in einem Verlängerungsanschlussstück für vorgefertigte verstärkte Betonpfähle, wobei ein erster verstärkter Betonpfahl (P1) und ein zweiter verstärkter Betonpfahl (P1), die daran angebracht werden, an ihren verbindbaren Enden (11, 12) Sperrgehäuse (2a), die mit Querlöchern (3a) versehen sind, und Sperrwellen (2b), die mit Querlöchern (3b) versehen sind, wobei sich die Sperrgehäuse und die Sperrwellen von Pfählen, die mit den Enden aneinander angebracht sind, in einer Längsrichtung (Lp) der Pfähle ineinander erstrekken, während die Querlöcher (3a und 3b) miteinander ausgerichtet sind, wie auch Einsetzstifte (16), die quer zu den Pfählen verlaufen und sich durch diese ausgerichteten Querlöcher (3a, 3b) erstrekken, aufweisen, **dadurch gekennzeichnet, dass** die Sperrsicherungskonstruktion Folgendes umfasst:

- einen in jeder inneren Ausdehnung (13) der Querlöcher (3a) in den Sperrgehäusen (2a) stationären Sperrring (4), wobei der Ring einen Außendurchmesser (D1) und einen Bohrungsdurchmesser (D3) aufweist, und der Sperrring zwischen dem Außendurchmesser (D1) und einem Innendurchmesser (D2) ein fortlaufendes umfängliches Segment (5) wie auch zwischen dem inneren Durchmesser (D2) und dem Bohrungsdurchmesser (D3) einer mittleren Öffnung (15) Federzungen (6), die durch radiale Schlitze (9) voneinander getrennt sind, aufweist, und
- an den Einsetzstiften (16) ein zylinderförmiges oder im Querschnitt vieleckiges inneres Ende (7), das einen Eingreifdurchmesser (D4) aufweist, der geringer als der Innendurchmesser (D2) des Sperrrings und größer als der Bohrungsdurchmesser (D3) des Sperrrings ist.

2. Sperrsicherungskonstruktion nach Anspruch 1, **dadurch gekennzeichnet, dass** sie ferner Endkappen (8) umfasst, wobei jede davon das Querloch (3a) in jeder inneren Ausdehnung (13) verstopft und den Sperrring (4) in Bezug auf die innere Ausdehnung stationär hält.

3. Sperrsicherungskonstruktion nach Anspruch 1 oder 2, **dadurch gekennzeichnet, dass** das Material der Einsetzstifte (16) eine Härte aufweist, die geringer als jene des Materials der Sperrringe (4) ist, wobei die inneren Lippen (17) der Federzungen (6) des Sperrrings (4) in das innere Ende (7) des Einsetzstifts (16) greifen, wenn sich der Einsetzstift in einer Position befindet, in der er durch die miteinander ausgerichteten Querlöcher (3a und 3b) geschlagen ist, was zu einem abgelenkten Zustand der Federzungen (6) führt.

4. Sperrsicherungskonstruktion nach Anspruch 1 oder 2 oder 3, **dadurch gekennzeichnet, dass** die Federzungen (6) eines Sperrrings (4) eine Dicke (S) aufweisen, die ein Ablenken der Federzungen verursacht, wenn das zylinderförmige innere Ende (7) eines Einsetzstifts (16) in die mittlere Öffnung (15) des Sperrrings geschlagen wird; dass die Dicke (S) nicht geringer als 0,5 mm ist; und dass die Dicke (S) nicht größer als 2 mm ist.

5. Sperrsicherungskonstruktion nach einem der vorhergehenden Ansprüche, **dadurch gekennzeichnet, dass** das innere Ende (7) der Einsetzstifte (16) mit einer umfänglichen Nut (20) für die innere Lippe (17) der Federzungen (6) eines Sperrrings versehen ist.

Revendications

1. Construction assurant un verrouillage dans un joint d'extension pour des pieux en béton armé précoulés, avec un premier pieu en béton armé (P1) et un second pieu en béton armé (P2) appliqué dessus, présentant, sur leurs extrémités (11, 12) interconnectables, des boitiers à verrou (2a) dotés de trous transversaux (3a), et des broches à verrou (2b) dotées de trous transversaux (3b), ce par quoi les boitiers à verrou et les broches à verrou de pieux appliqués bout-à-bout s'étendent l'un dans l'autre dans un sens longitudinal (Lp) des pieux avec les trous transversaux (3a et 3b) alignés l'un avec l'autre, ainsi que des tiges d'insertion (16) transversales aux pieux et s'étendant à travers ces trous transversaux (3a, 3b) alignés, **caractérisée en ce que** la construction assurant un verrouillage comprend :

- une bague de verrouillage (4) fixe dans chaque extension intérieure (13) des trous transversaux (3a) dans les boitiers à verrou (2a), la bague présentant un diamètre extérieur (D1) et un dia-

mètre de perçage (D3), et la bague de verrouillage présentant, entre le diamètre extérieur (D1) et un diamètre intérieur (D2), un segment périphérique continu (5) ainsi qu'entre le diamètre intérieur (D2) et le diamètre de perçage (D3) d'un orifice central (15), des onglets à ressort (6) séparés l'un de l'autre par des fentes radiales (9), et

- dans les tiges d'insertion (16), une extrémité intérieure cylindrique ou polygonale en section transversale (7), présentant un diamètre d'engagement (D4) qui est inférieur au diamètre intérieur (D2) de la bague de verrouillage et supérieur au diamètre de perçage (D3) de la bague de verrouillage.

2. Construction assurant un verrouillage selon la revendication 1, **caractérisée en ce qu'**elle comprend en outre des bouchons d'extrémité (8), chacun bouchant le trou transversal (3a) dans chaque extension intérieure (13) et retenant la bague de verrouillage (4) fixement contre l'extension intérieure.

3. Construction assurant un verrouillage selon la revendication 1 ou 2, **caractérisée en ce que** le matériau des tiges d'insertion (16) présente une dureté qui est inférieure à celle du matériau de la bague de verrouillage (4), ce par quoi les onglets à ressort (6) de la bague de verrouillage ont leur lèvre intérieure (17) qui mord dans l'extrémité intérieure (7) de la tige d'insertion (16) lorsque la tige d'insertion est dans une position prise au travers des trous transversaux (3a et 3b) alignés mutuellement, résultant ainsi en un état dévié des onglets à ressort (6).

4. Construction assurant un verrouillage selon la revendication 1, 2 ou 3, **caractérisée en ce que** les onglets à ressort (6) d'une bague de verrouillage (4) présentent une épaisseur (S) qui provoque une déviation des onglets à ressort lorsque l'extrémité intérieure (7) cylindrique d'une tige d'insertion (16) est prise dans l'orifice central (15) de la bague de verrouillage ; que l'épaisseur (S) est supérieure ou égale à 0,5 mm ; et que l'épaisseur (S) est inférieure ou égale à 2 mm.

5. Construction assurant un verrouillage selon l'une quelconque des revendication précédentes, **caractérisée en ce que** l'extrémité intérieure (7) des tiges d'insertion (16) est dotée d'une rainure périphérique (20) pour la lèvre intérieure (17) d'un onglet à ressort (6) de la bague de verrouillage.

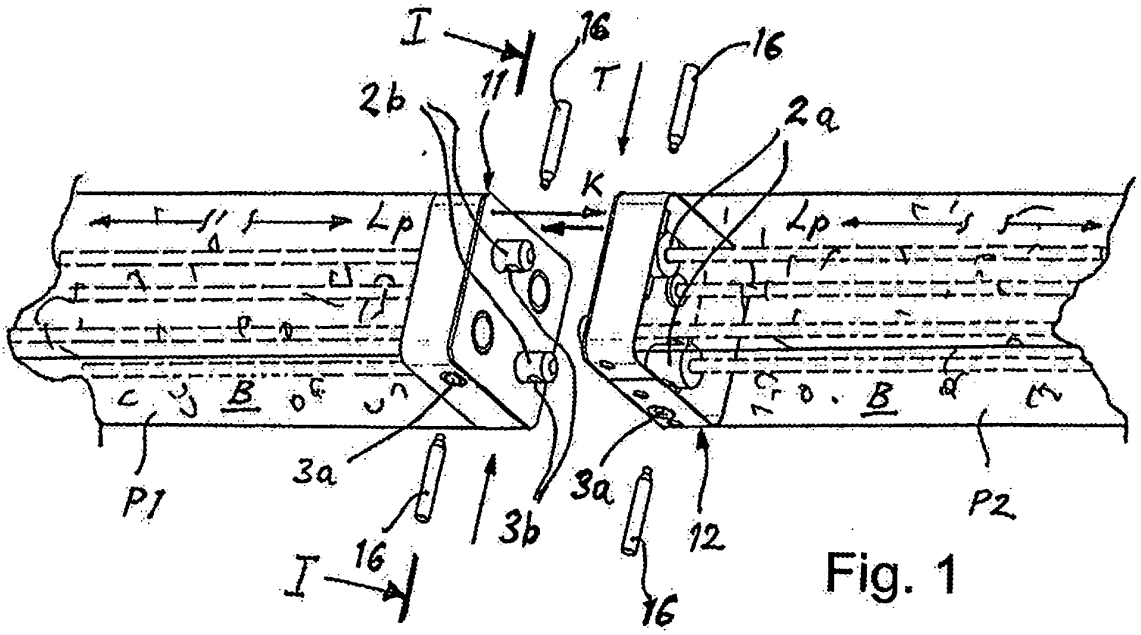

Fig. 1

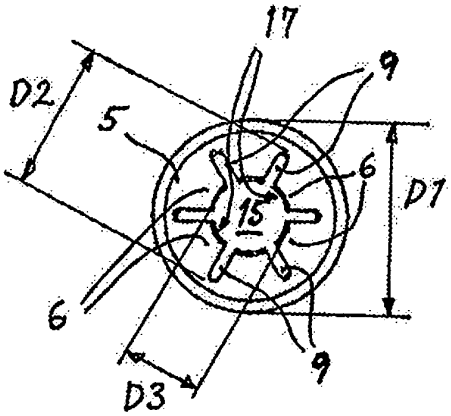

Fig. 3

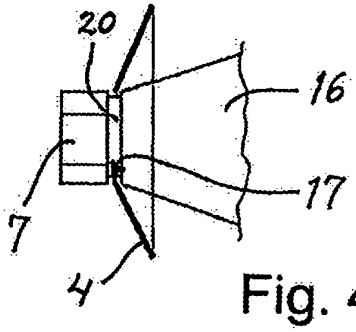

Fig. 4

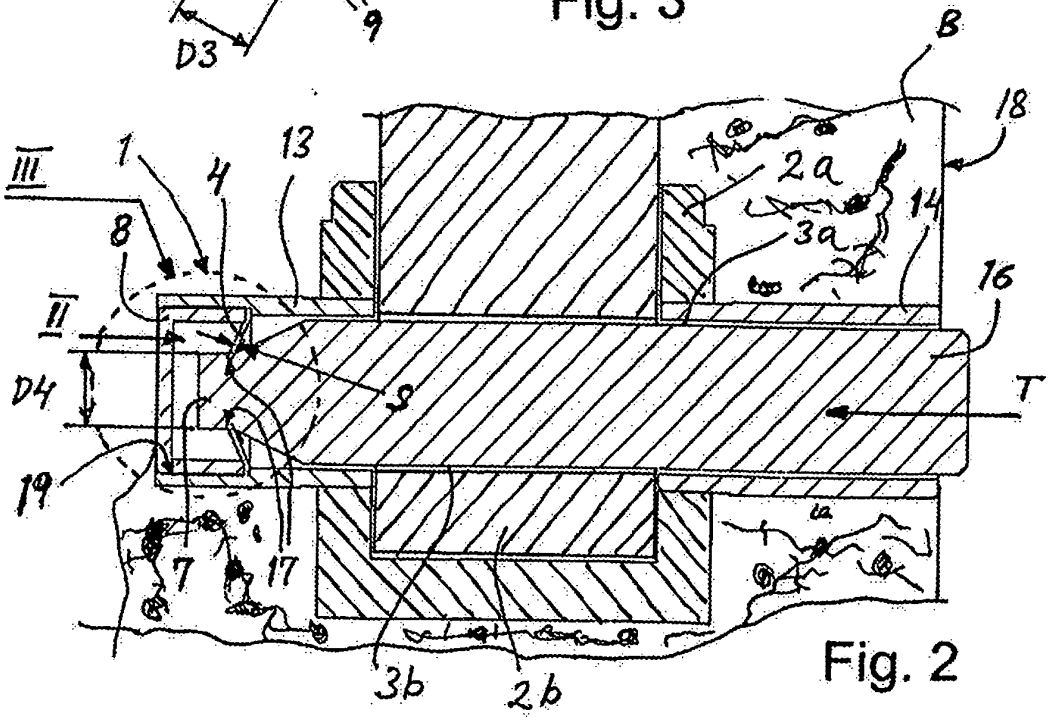

Fig. 2

REFERENCES CITED IN THE DESCRIPTION

This list of references cited by the applicant is for the reader's convenience only. It does not form part of the European patent document. Even though great care has been taken in compiling the references, errors or omissions cannot be excluded and the EPO disclaims all liability in this regard.

Patent documents cited in the description

- FI 76169 **[0002]**
- SE 508943 **[0002]**
- FI 20020172 **[0003]**