(19) Europäisches Patentamt
European Patent Office
Office européen des brevets

(11) EP 2 324 165 B1

(12) **EUROPEAN PATENT SPECIFICATION**

(45) Date of publication and mention of the grant of the patent:
09.04.2014 Bulletin 2014/15

(21) Application number: **09705796.2**

(22) Date of filing: **02.02.2009**

(51) Int Cl.:
E04D 12/00 *(2006.01)* ***E04B 1/94*** *(2006.01)*
E04B 2/74 *(2006.01)*

(86) International application number:
PCT/EP2009/000659

(87) International publication number:
WO 2009/095272 (06.08.2009 Gazette 2009/32)

(54) **A LINK BATTEN**

VERBINDUNGSLATTE

VOLIGE DE LIAISON

(84) Designated Contracting States:
AT BE BG CH CY CZ DE DK EE ES FI FR GB GR HR HU IE IS IT LI LT LU LV MC MK MT NL NO PL PT RO SE SI SK TR

(30) Priority: **01.02.2008 IE 20080079**

(43) Date of publication of application:
25.05.2011 Bulletin 2011/21

(73) Proprietor: **Manning, Noel Christopher**
Enniskerry
County Wicklow (IE)

(72) Inventor: **Manning, Noel Christopher**
Enniskerry
County Wicklow (IE)

(74) Representative: **McCarthy, Denis Alexis et al**
MacLachlan & Donaldson
2B Clonskeagh Square
Clonskeagh Road
Dublin 14 (IE)

(56) References cited:
WO-A-02/095153
DE-U1-202005 020 804
GB-A- 2 189 827
US-B1- 6 718 719
WO-A-2008/090532
GB-A- 2 082 647
GB-A- 2 359 829

Note: Within nine months of the publication of the mention of the grant of the European patent in the European Patent Bulletin, any person may give notice to the European Patent Office of opposition to that patent, in accordance with the Implementing Regulations. Notice of opposition shall not be deemed to have been filed until the opposition fee has been paid. (Art. 99(1) European Patent Convention).

EP 2 324 165 B1

Printed by Jouve, 75001 PARIS (FR)

Description

[0001] The present invention relates to a link batten, and more particularly, a link batten for use with a firebreak roof divide system for preventing the spread of fire between semi detached, terrace type housing, and or apartments. More particularly, the present invention relates to a non-combustible link batten for use over the width of a party or separating wall which replaces timber battens which are presently used at this point.

[0002] The primary cause of fire spread from one dwelling unit to another in a terrace of houses or pair of semi-detached houses is the premature collapse of the roof structure in the burning dwelling, once fire has entered the roof or attic space. Such a premature collapse typically occurs within ten to twenty minutes and is premature relevant to the party or separating walls minimum regulatory requirement of sixty minutes structural integrity and fire resistance.

[0003] A variety of solutions have been proposed to address the problem of such party or separating walls prematurely collapsing. GB Patent Publication No. 2 082 647 shows a tried, fire tested and approved fire barrier for closing or sealing the gap between two structural members of a building, that is, between a party or separating wall at its abutment with that of the roof covering. Use of such a barrier is adapted to prevent the spread of fire across the party wall. The present invention relates to an improvement of the link batten member disclosed in GB Patent Publication No. 2 082 647.

[0004] GB-A-2189827 discloses a fire stop for a roof space comprises a non-combustible, plate-like body member for locating above a dividing wall between two roof volumes, the member including upper and lower plate portions and, integral therewith, an upstanding, downwardly-open intermediate channel portion extending transversely of the body member between the upper and lower plate portions. The fire stop further comprises upper and lower layers of compressible, non-combustible material secured to the upper and lower surfaces respectively of the upper plate portion, each layer extending over the height of, and over part at least of the width of, the upper plate portion, and an infill of compressible, non-combustible material within the central regions of the hollow interior of the intermediate channel portion of the body member.

[0005] A link batten with receiving means made of timber is disclosed in WO 2008/090532 A (published on 31.07.2008).

[0006] It is acknowledged that the term 'comprise' may, under varying jurisdictions be provided with either an exclusive or inclusive meaning. For the purpose of this specification, and unless otherwise noted explicitly, the term comprise shall have an inclusive meaning - i.e. that it may be taken to mean an inclusion of not only the listed components it directly references, but also other non-specified components. Accordingly, the term 'comprise' is to be attributed with as broader interpretation as possible within any given jurisdiction and this rationale should also be used when the terms 'comprised' and/or 'comprising' are used.

[0007] Further aspects of the present invention will become apparent from the ensuing description which is given by way of example only.

[0008] Accordingly, there is provided a link batten to join adjacent ends of a pair of roof battens as defined in the appended claims.

[0009] Accordingly, there is provided a link batten to join adjacent ends of a pair of roof battens, the link batten comprising:

> an elongate member of fire resistant material having a pair of ends, each end adapted to engage with one of the roof battens,
>
> receiving means adapted to receive securing means to secure roofing material to the link batten,
>
> characterised in that the link batten further comprises a pair of seating frames, one located substantially adjacent each end of the elongate member, and the receiving means is made of a fire resistant plastics material.

[0010] The link batten of the present invention is adapted to be used with slates, tiles or any other roofing materials. The receiving means provides a ground in the link batten and acts as base to an anchor slate nails to enable the fixing of the varying required roof coverings to the link batten. Thus the link batten is multipurpose in its design to enable the fixing of the varying required roof coverings, and is therefore adaptable.

[0011] Use of such non-combustible link battens provides for a very important fulcrum break off point either side of a party or separating wall. The link batten allows the roof to collapse in a controlled and predictable manner without causing disruption to the configuration of the fire barrier or fire stop used for closing the gap of the party or separating wall at its abutment with the underside of the roof covering. The link batten of the present invention thus ensures that the arrangement at the party wall complies with regulatory requirements, overall assembly and embodiment. Without the inclusion of thea non-combustible link batten of the present invention, which can be constructed from steel or similar non-combustible materials, at this point over the full width of the party or separating wall, the normal continued timber battens at this point would cause a fulcrum or sea-saw type action to occur over the party or separating walls. In the event of fire such a fulcrum or sea-saw action occurs when the roof structure either side of the party or separating wall collapses. Such a fulcrum or sea-saw action will displace or disrupt the tiles, slates and or other roof coverings having an A/A, A/B or A/C rating (surface spread of flame rating requirement) along the line of the party or separating wall. Such a displacement or disruption may often

extend up to a metre into the adjoining property, resulting in fire spread. It is to be understood that this is fire spread caused by the behavior of structure and not combustibility alone.

[0012] In another embodiment of the invention, the receiving means is releasably mounted in a seating frame of the elongate member.

[0013] In another embodiment of the invention, each seating frame projects underneath the elongate member between the adjacent ends of the roof battens.

[0014] In another embodiment of the invention, the receiving means is formed as an inverted container having a top wall, at least one side wall and an open bottom opposite the top wall.

[0015] In another embodiment of the invention, the top wall of the receiving means is exposed through a cutaway portion of the elongate member when mounted in the seating frame.

[0016] In another embodiment of the invention, the link batten further comprises a fire resistant blade member intermediate the ends of the elongate member.

[0017] Preferably, the blade member is adapted to be bendable to enable the ends of the elongate member to be aligned with the ends of the roof battens to be joined.

[0018] The link batten of the present invention joins adjacent ends of elongate roof battens. The link batten is fire resistant and includes a resilient or bendable fire resistant blade member intermediate the ends of an elongate member. The provision of such a bendable fire resistant blade member will enable the link batten to be twisted, bent or adjusted to accommodate for alignment discrepancies of the adjacent ends of the roof battens over the full width of the roof or building. This will facilitate correct installment and alignment of the link batten between roof battens across a party or dividing wall. The link batten thus provides good structural connectivity between the adjacent timber roof battens, and a means of protection against the spread of fire.

[0019] In another embodiment of the invention, the blade member is substantially normal to the elongate member and adapted to project therefrom through or over the top a fire barrier which extends between the ends of the roof battens.

[0020] The fire resistant blade member is configured to extend through and/or over the top of a fire barrier in the form of a compressible cockscomb seal used to form a part of the barrier at the party wall. The fire resistant blade member is configured to press down on the cockscomb seal thus enabling the cockscomb seal to completely seal the gap at the party wall to the underside of the roof covering. The orientation of the resilient fire resistant blade member in the present invention to be perpendicular relative to the elongate member will prevent disruption to the barrier due to the introduction of the link batten. The perpendicular orientation of the fire resistant member blade member in the present invention enables the fire resistant member to be inserted into and seal in the cockscomb barrier thus eliminating any distortion to the optimal shape of the barrier while maintaining a good seal at the critical abutment. Use of a link batten having a blade member which extends normal to the elongate member will also avoid the need to cut or profile the cockscomb fire barrier to receive the fire resistant link batten member.

[0021] In another embodiment of the invention, each end of the elongate member is adapted for mounting on a surface of a roof batten.

[0022] Preferably, each end of the elongate member is adapted for mounting on a ridge of a roof batten.

[0023] In another embodiment of the invention, each end of the elongate member is substantially L-shaped to embrace a ridge of a roof batten.

[0024] Alternatively, each end of the elongate member defines the cross-sectional area of the roof battens and embraces the roof battens.

[0025] The roofing battens can be timber battens.

[0026] In another embodiment of the invention, aperture means are provided on the elongate member to receive securing means for fixing the link batten between the ends of the roofing battens. Aperture means in the form of holes are provided in the elongate member to enable nails, screws, rivets and like to be inserted for securing the link batten member to the adjacent ends of timber roofing battens and rafters, and or trusses.

[0027] In another embodiment of the invention, the elongate member and the fire resistant blade member are integrally formed. Preferably, the edges of blade member and the seating frame are lipped.

[0028] In another embodiment of the invention, the elongate member and the blade member are made of steel material.

[0029] The invention will be more clearly understood from the following description of some embodiments thereof, given by way of example only, with reference to the accompanying drawings, in which:

Fig. 1 is a plan view of a link batten according to the invention;

Fig. 2 is a perspective view of the link batten of Fig. 1 joining adjacent ends of a pair of timber roof battens, and

Figs. 3 and 4 shows the collapse of the roof without the inclusion of the all important non-combustible link batten of the present invention, which as shown is resulting in roof collapse either side of the party or separating wall, and

Figs. 5 and 6 shows the controlled collapse of the roof about a fulcrum close to the party/separating wall of a building incorporating the link batten shown in Fig. 1.

[0030] Referring to the drawings, and initially to Figs. 1 and 2, there is shown a link batten, indicated generally

by the reference numeral 1, for joining adjacent ends 2 of a pair of timber roof battens 3 to prevent the spread of fire from one roof batten to the other roof batten. In the instance shown, the roof battens 3 are located in two different roof spaces and the link member 1 bridges a gap, indicated generally by the reference numeral 4 formed between adjacent ends 2 of the timber roof battens 3. The link batten 1 thus provides continuity of the roof structure of two adjacent building units.

[0031] The link batten 1 comprises an elongate member, indicated generally by the reference numeral 5, of fire resistant material. In one embodiment, the link member 1 is made of galvanised steel material, although it is envisaged that a variety of other suitable fire resistant materials may also be used. Each end 6 of the elongate member 5 is adapted to engage with an adjacent end of a timber roof batten 3. Aperture means in the form of holes 7 are also provided in the elongate member 5 through which nails, screws, rivets and the like may be inserted for securing the link batten 1 to the timber roof battens 3.

[0032] Also shown is a resilient fire resistant blade member 8 intermediate the ends of the elongate member 5. In the instance shown, the blade member 8 is profiled or shaped as a narrow plate and projects substantially normal to the elongate member and hangs therefrom. However, the blade member 8 may by profiled as necessary so that it can extend through or sit over the top a cockscomb brush type fire barrier (not shown) which extends between the ends of the roof battens in a roof cavity. In the instance shown the elongate member and the fire resistant blade member are integrally formed.

[0033] Each end 6 of the elongate member 5 is adapted for mounting on a surface of an end 2 of a roof batten 3. In the instance shown, the ends 6 of the elongate member 5 are adapted for mounting on a ridge or corner of an end 2 of a roof batten 3. In such an embodiment the end 6 of the elongated member 5 is substantially L-shaped to embrace a ridge at the end 2 of the roof batten 3. In this embodiment, the end 6 of the elongate member 5 together with an end portion 9 (view obscured) of the blade member 8 forms an L-shaped structure suitable for mounting on an end ridge of the timber roof batten 3. In a still further alternative, each end of the elongated member 5 may define the cross-sectional area of the roof battens 3 so as to embrace fully the ends 2 of the roof battens around their outer perimeter surfaces.

[0034] Also shown are aperture means 7 provided on the elongate 5 member. Such an aperture means 7 can be configured as desired or as required to receive securing means for fixing the link batten 1 between the ends 2 of the roofing battens 3. The aperture means 7 provided in the elongate member 5 enables nails, screws, rivets and like to be inserted for securing the link batten 1 to the adjacent ends 2 of timber roofing battens 3 and/or rafters, and or trusses.

[0035] At each end 6 of the elongate member 5 there is shown an receiving means 12 adapted to receive securing means to secure roofing material (14, see Fig. 3), such as slates or tiles, to the link batten 1. Use of the receiving means 12 with the link member 1 may be dependent on the specific roofing material being used to cover the roofing trusses. For example, if roofing slates are being used then the receiving means or ground 12 would be suitable for receiving fixing means, such as nails and the like, to secure the roofing slates to the link batten 1. The receiving means 12 thus provides a ground in the link batten 1 and acts as base to anchor slate nails to enable the fixing of the varying required roof coverings to the link batten 1. Thus the link batten is multipurpose in its design to enable the fixing of the varying required roof coverings, and is therefore adaptable.

[0036] Each receiving means 12 is mounted in a seating frame 11 located substantially adjacent each end 6 of the elongate member 5. Each receiving means 12 is formed as an inverted container having a top wall, at least one side wall and an open bottom opposite the top wall. When the receiving means 12 are mounted in the seating frames 11, the top wall of the receiving means 12 is exposed through a cut-away portion in the elongate member 6. The cut-away portion in the elongate member 5 is the region shown in Figs. 1 and 2 between the hatched lines surrounding receiving means 12. Each seating frame 11 projects underneath the elongate member 5 between the adjacent ends 2 of the roof battens 3 and each receiving means 12 is accessed by the securing means via the cut-away portion in the elongate member 5. Each receiving means 12 is made of a fire resistant plastics material.

[0037] In the instance shown, the seating frame 11 comprises a section 15 of the blade member 8, and a further section 13 which extends normal from the elongate member 5 and projects therefrom. The seating frame 11 also has an open portion (view obscured) through which the receiving means may be positioned in the frame 11. As shown, the section 13 is connected at one end to the blade member 8. The free edges of the blade member 8 and sections 13 are lipped to provide seating ledges for the receiving means.

[0038] Figs. 3 and 4 show the collapse of the roof 20 without the inclusion of the non-combustible link batten 1 of the present invention which, as shown in Fig. 4 is resulting in complete roof failure and collapse either side of the party or separating wall 21. Without the inclusion of the non-combustible link batten 1 of the present invention over the full width of the party or separating wall 21, the normal continued timber battens 3 at this point would cause a fulcrum or sea-saw type action to occur over the party or separating walls 21. In the event of fire such a fulcrum or sea-saw action occurs when the roof structure either side of the party or separating wall 21 collapses. Such a fulcrum or sea-saw action will displace or disrupt the tiles, slates and or other roof coverings 14 having an A/A, A/B or A/C rating (surface spread of flame rating requirement) along the line of the party or separating wall 21. Such a displacement or disruption often extends up

to a metre into the adjoining property, resulting in fire spread.

[0039] Figs. 5 and 6 show the controlled collapse of a roof 20 on one side of a party wall 21 using the link batten 1 of the present invention. In the instance shown, the link batten 1 joins adjacent ends 2 of a pair of roof battens 3 to prevent the spread of fire from one roof batten 3 to the other. The link batten 1 provides a fulcrum break point at the critical abutment location relevant to the party/separating wall at either side of the party/separating wall 21, and allows the roof 20 to collapse in a controlled manner without causing disruption to the configuration of the fire-break roof divide barrier 22 at the critical abutment. Note that in particular, only one side of the roofing section 20 at the party wall 21 has collapsed and that the other side remains unaffected due to the presence of the link batten 1. Accordingly, such a link batten 1 maintains the structural continuity and integrity of the roof construction 20 in the cold state (that is, prior to a fire) and in the event of fire results in roof collapse on only the fire affected side of the party or separating wall 20. Thus the non-combustible link battens 1 of the present invention provide for an all important break off point either side of the wall. This structural fire engineering approach thus prevents the spread of fire from one dwelling unit, such as a house in a terrace of houses or in a pair of semi-detached houses, and or apartments to an adjoining dwelling unit whilst maintaining the structural continuity and integrity of the roof construction over the dwelling units and properties.

[0040] Aspects of the present invention have been described by way of example only and it should be appreciate that additions and/or modifications may be made thereto without departing from the scope thereof as defined in the appended claims.

Claims

1. A link batten (1) to join adjacent ends (2) of a pair of roof battens (3), the link batten (1) comprising:

an elongate member (5) of fire resistant material having a pair of ends (6), each end adapted to engage with one of the roof battens (3),
receiving means (12) adapted to receive securing means to secure roofing material to the link batten (1);
characterised in that the link batten (1) further comprises a pair of seating frames (11), one located substantially adjacent each end (6) of the elongate member (5), and that the receiving means (12) is made of a fire resistant plastics material.

2. A link batten (1) as claimed in Claim 1, in which the receiving means (12) is releasably mounted in a seating frame (11) of the elongate member (5);

3. A link batten (1) as claimed in any one of the preceding claims, in which each seating frame (11) projects underneath the elongate member (5) between the adjacent ends (2) of the roof battens (3).

4. A link batten (1) as claimed in any preceding claim, in which the receiving means (12) is formed as an inverted container having a top wall, at least one side wall and an open bottom opposite the top wall.

5. A link batten (1) as claimed in Claim 4, in which the top wall of the receiving means (12) is exposed through a cut-away portion of the elongate member (5) when mounted in the seating frame (11).

6. A link batten (1) as claimed in any preceding claim, further comprising a fire resistant blade member (8) intermediate the ends (6) of the elongate member (5).

7. A link batten (1) as claimed in Claim 6, in which the blade member (8) is substantially normal to the elongate member (5) and adapted to project therefrom through or over the top of a fire barrier (22) which extends between the ends (2) of the roof battens (3).

8. A link batten (1) as claimed in Claim 6 or 7, in which the blade member (8) is adapted to be bendable to enable the ends (6) of the elongate member (5) to be aligned with the ends (2) of the roof battens (3) to be joined.

9. A link batten (1) as claimed in any one of Claims 6 to 8, in which the blade member (8) is profiled as a narrow plate and projects normal to the elongate member (5) and hangs therefrom.

10. A link batten (1) as claimed in any preceding claim, in which each end (6) of the elongate member (5) is adapted for mounting on a surface of a roof batten (3).

11. A link batten (1) as claimed in any preceding claim, in which each end (6) of the elongate member (5) is adapted for mounting on a ridge of a roof batten (3), and in which each end (6) of the elongate member (5) is substantially L-shaped to embrace the ridge.

12. A link batten (1) as claimed in any one of Claims 1 to 10, in which each end (6) of the elongate member (5) defines a cross-section of the roof battens (3) and embraces an end of one of the roof battens (3).

13. A link batten (1) as claimed in any preceding claim, in which aperture means are provided on the elongate member (5) to receive securing means for fixing the link batten (1) between the ends (2) of the roofing battens (3).

14. A link batten (1) as claimed in any of Claims 6 to 13, in which the elongate member (5) and the fire resistant blade member (8) are integrally formed, and in which the elongate member (5) and the blade member (8) are made of steel material.

Patentansprüche

1. Verbindungslatte (1) zum Verbinden benachbarter Enden (2) eines Dachlattenpaars (3), wobei die Verbindungslatte (1) Folgendes umfasst:

ein langgestrecktes Element (5) aus feuerfestem Material mit einem Paar Enden (6), wobei jedes Ende derart adaptiert ist, um in eine der Dachlatten (3) einzugreifen,
ein Aufnahmemittel (12), das derart adaptiert ist, um Sicherungsmittel zum Sichern von Dachmaterial an den Dachlatten (1) aufzunehmen;
dadurch gekennzeichnet, dass die Verbindungslatte (1) ferner ein Paar Auflagerahmen (11) umfasst, wobei eines davon im Wesentlichen an jedem Ende (6) des langgestreckten Elements (5) befindlich ist und dass das Aufnahmemittel (12) aus einem feuerfesten Kunststoffmaterial hergestellt ist.

2. Verbindungslatte (1) nach Anspruch 1, wobei das Aufnahmemittel (12) lösbar in einem Auflagerahmen (11) des langgestreckten Elements (5) befestigt ist.

3. Verbindungslatte (1) nach einem der vorstehenden Ansprüche, wobei jeder Auflagerahmen (11) unterhalt des langgestreckten Elements (5) zwischen den benachbarten Enden (2) der Dachlatten (3) vorsteht.

4. Verbindungslatte (1) nach einem der vorstehenden Ansprüche, wobei das Aufnahmemittel (12) als ein invertierter Behälter mit einer oberen Wand, wenigstens einer Seitenwand und einem offenen Boden gegenüber der oberen Wand gebildet ist.

5. Verbindungslatte (1) nach Anspruch 4, wobei die obere Wand des Aufnahmemittels (12) beim Befestigen im Auflagerahmen (11) durch einen ausgeschnittenen Abschnitt des langgestreckten Elements (5) freigelegt ist.

6. Verbindungslatte (1) nach einem der vorstehenden Ansprüche, ferner umfassend ein feuerfestes Schenkelelement (8), das zwischen den Enden (6) des langgestreckten Elements (5) liegt.

7. Verbindungslatte (1) nach Anspruch 6, wobei das Schenkelelement (8) im Wesentlichen normal zum langgestreckten Element (5) liegt und derart adaptiert ist, um von diesem durch die oder über der Oberseite einer Flammbarriere (22) vorzustehen, die sich zwischen den Enden (2) der Dachlatten (3) erstreckt.

8. Verbindungslatte (1) nach Anspruch 6 oder 7, wobei das Schenkelelement (8) derart adaptiert ist, um biegbar zu sein, um es den Enden (6) des langgestreckten Elements (5) zu ermöglichen, mit den Enden (2) der zu verbindenden Dachlatten (3) ausgerichtet zu werden.

9. Verbindungslatte (1) nach einem der Ansprüche 6 bis 8, wobei das Schenkelelement (8) als eine schmale Platte profiliert ist und normal zum langgestreckten Element (5) vorsteht und von diesem hängt.

10. Verbindungslatte (1) nach einem der vorstehenden Ansprüche, wobei jedes Ende (6) des langgestreckten Elements (5) zur Befestigung an einer Oberfläche einer Dachlatte (3) adaptiert ist.

11. Verbindungslatte (1) nach einem der vorstehenden Ansprüche, wobei jedes Ende (6) des langgestreckten Elements (5) zur Befestigung an einer Kante einer Dachlatte (3) adaptiert ist und wobei jedes Ende (6) des langgestreckten Elements (5) im Wesentlichen eine L-Form aufweist, um die Kante zu umfassen.

12. Verbindungslatte (1) nach einem der Ansprüche 1 bis 10, wobei jedes Ende (6) des langgestreckten Elements (5) einen Querschnitt der Dachlatten (3) definiert und ein Ende einer der Dachlatten (3) umfasst.

13. Verbindungslatte (1) nach einem der vorstehenden Ansprüche, wobei Öffnungsmittel am langgestreckten Element (5) bereitgestellt sind, um das Sicherungsmittel zum Fixieren der Verbindungslatte (1) zwischen den Enden (2) der Dachlatten (3) aufzunehmen.

14. Verbindungslatte (1) nach einem der Ansprüche 6 bis 13, wobei das langgestreckte Element (5) und das feuerfeste Schenkelelement (8) integral miteinander gebildet sind und wobei das langgestreckte Element (5) und das Schenkelelement (8) aus Stahlmaterial hergestellt sind.

Revendications

1. Latte de liaison (1), pour joindre des extrémités adjacentes (2) d'une paire de lattes de toit (3), la latte de liaison (1) comprenant :

un membre allongé (5) en un matériau ignifuge, ayant une paire d'extrémités (6), chaque extré-

mité étant apte à entrer en prise avec l'une des lattes de toit (3),
un moyen récepteur (12), apte à recevoir des moyens d'assujettissement pour assujettir le matériau de couverture à la latte de liaison (1) ; **caractérisée en ce que** la latte de liaison (1) comprend en outre une paire de cadres d'appui (11), situés d'une manière sensiblement adjacente à chaque extrémité (6) du membre allongé (5), et que le moyen récepteur (12) est réalisé en un matériau plastique ignifuge.

2. Latte de liaison (1) selon la revendication 1, dans laquelle le moyen récepteur (12) est monté d'une manière amovible dans un cadre d'appui (11) du membre allongé (5).

3. Latte de liaison (1) selon l'une quelconque des revendications précédentes, dans laquelle chaque cadre d'appui (11) dépasse en-dessous du membre allongé (5) entre les extrémités adjacentes (2) des lattes de toit (3).

4. Latte de liaison (1) selon l'une quelconque des revendications précédentes, dans laquelle le moyen récepteur (12) est formé d'un contenant inversé ayant une paroi supérieure, au moins une paroi latérale et un fond ouvert opposé à la paroi supérieure.

5. Latte de liaison (1) selon la revendication 4, dans laquelle la paroi supérieure du moyen récepteur (12) est exposée par une portion découpée du membre allongé (5) quand il est monté dans le cadre d'appui (11).

6. Latte de liaison (1) selon l'une quelconque des revendications précédentes, comprenant en outre un membre (8) ignifuge en forme de lame, situé sur une position intermédiaire entre les extrémités (6) du membre allongé (5).

7. Latte de liaison (1) selon la revendication 6, dans laquelle le membre (8) en forme de lame est sensiblement normal au membre allongé (5) et est apte à faire saillie à partir de ce dernier, en traversant ou en dépassant la partie supérieure d'une barrière ignifuge (22) qui s'étend entre les extrémités (2) des lattes de toit (3).

8. Latte de liaison (1) selon la revendication 6 ou 7, dans laquelle le membre (8) en forme de lame est apte à être cintré de façon à permettre aux extrémités (6) du membre allongé (5) de s'aligner avec les extrémités (2) des lattes de toit (3) à assembler.

9. Latte de liaison (1) selon l'une quelconque des revendications 6 à 8, dans laquelle le membre (8) en forme de lame est profilé sous forme d'une plaque étroite et dépasse normalement par rapport au membre allongé (5) et pend à partir de ce dernier.

10. Latte de liaison (1) selon l'une quelconque des revendications précédentes, dans laquelle chaque extrémité (6) du membre allongé (5) est apte à être montée sur une surface d'une latte de toit (3).

11. Latte de liaison (1) selon l'une quelconque des revendications précédentes, dans laquelle chaque extrémité (6) du membre allongé (5) est apte à être montée sur une arête d'une latte de toit (3), et dans laquelle chaque extrémité (6) du membre allongé (5) est sensiblement en forme de L pour encercler l'arête.

12. Latte de liaison (1) selon l'une quelconque des revendications 1 à 10, dans laquelle chaque extrémité (6) du membre allongé (5) définit une section transversale des lattes de toit (3) et encercle une extrémité de l'une des lattes de toit (3).

13. Latte de liaison (1) selon l'une quelconque des revendications précédentes, dans laquelle des moyens d'ouverture sont aménagés sur le membre allongé (5) pour recevoir un moyen d'assujettissement destiné à fixer la latte de liaison (1) entre les extrémités (2) des lattes de couverture (3).

14. Latte de liaison (1) selon l'une quelconque des revendications 6 à 13, dans laquelle le membre allongé (5) et le membre ignifuge (8) en forme de lame sont formés d'une manière monobloc, et dans laquelle le membre allongé (5) et le membre (8) en forme de lame sont constitués d'un matériau de type acier.

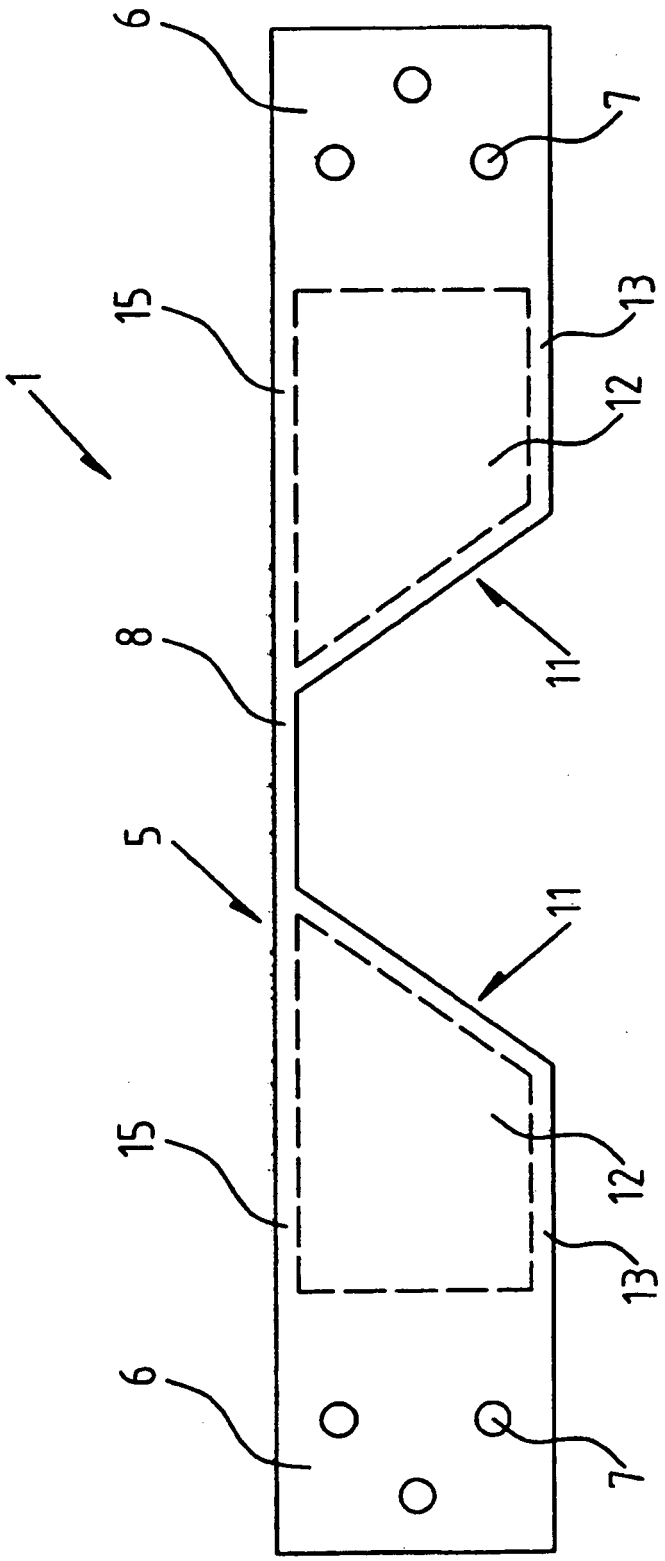

Fig. 1

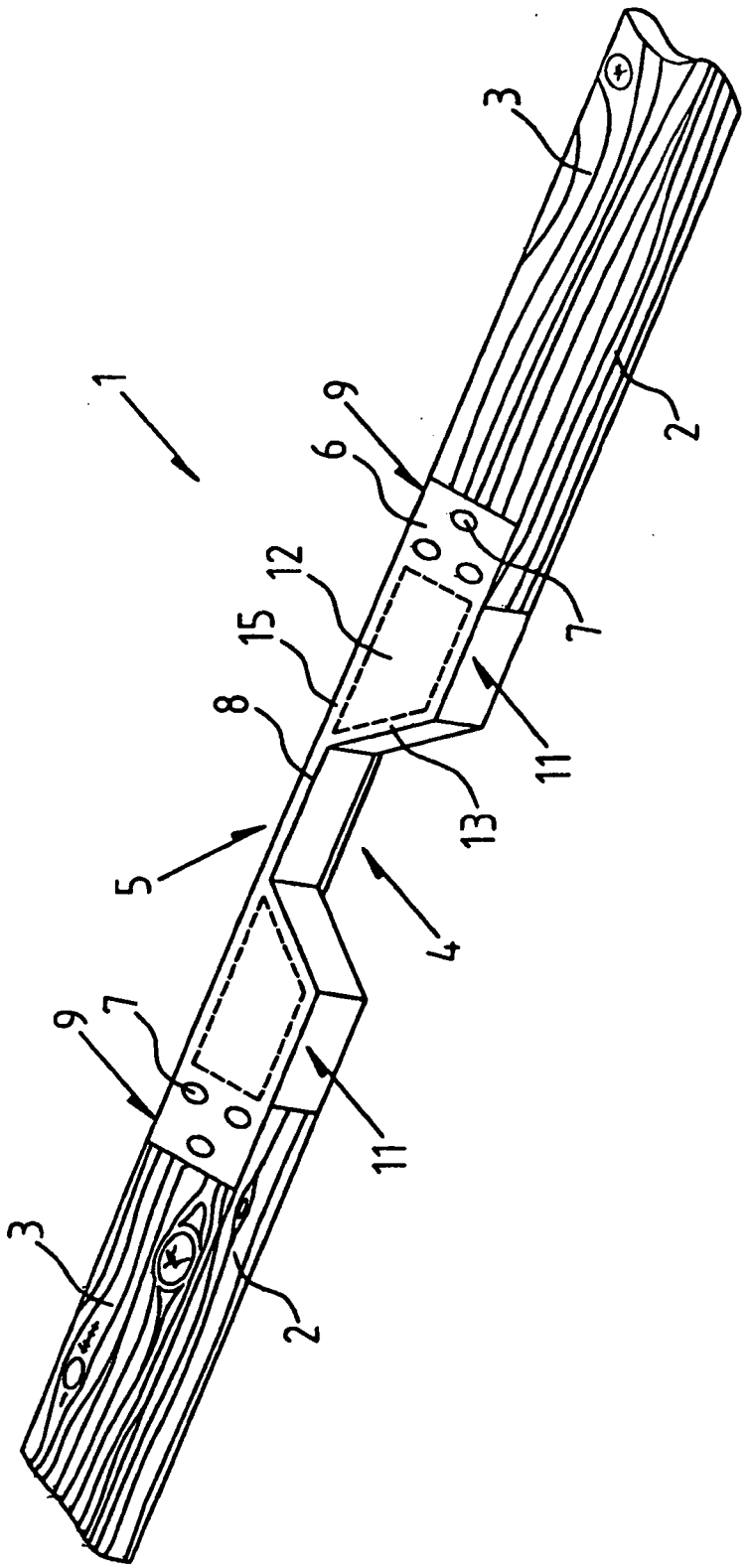

Fig. 2

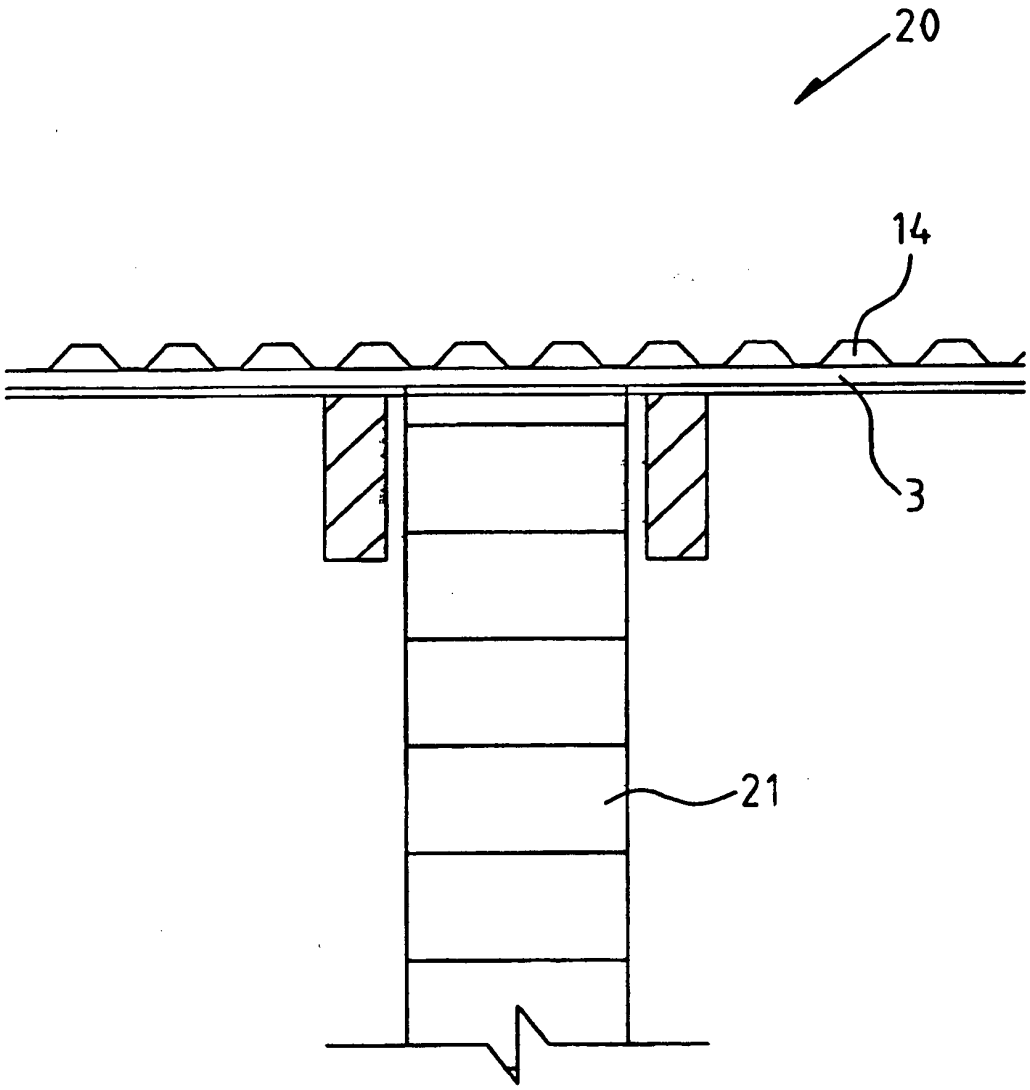

Fig. 3

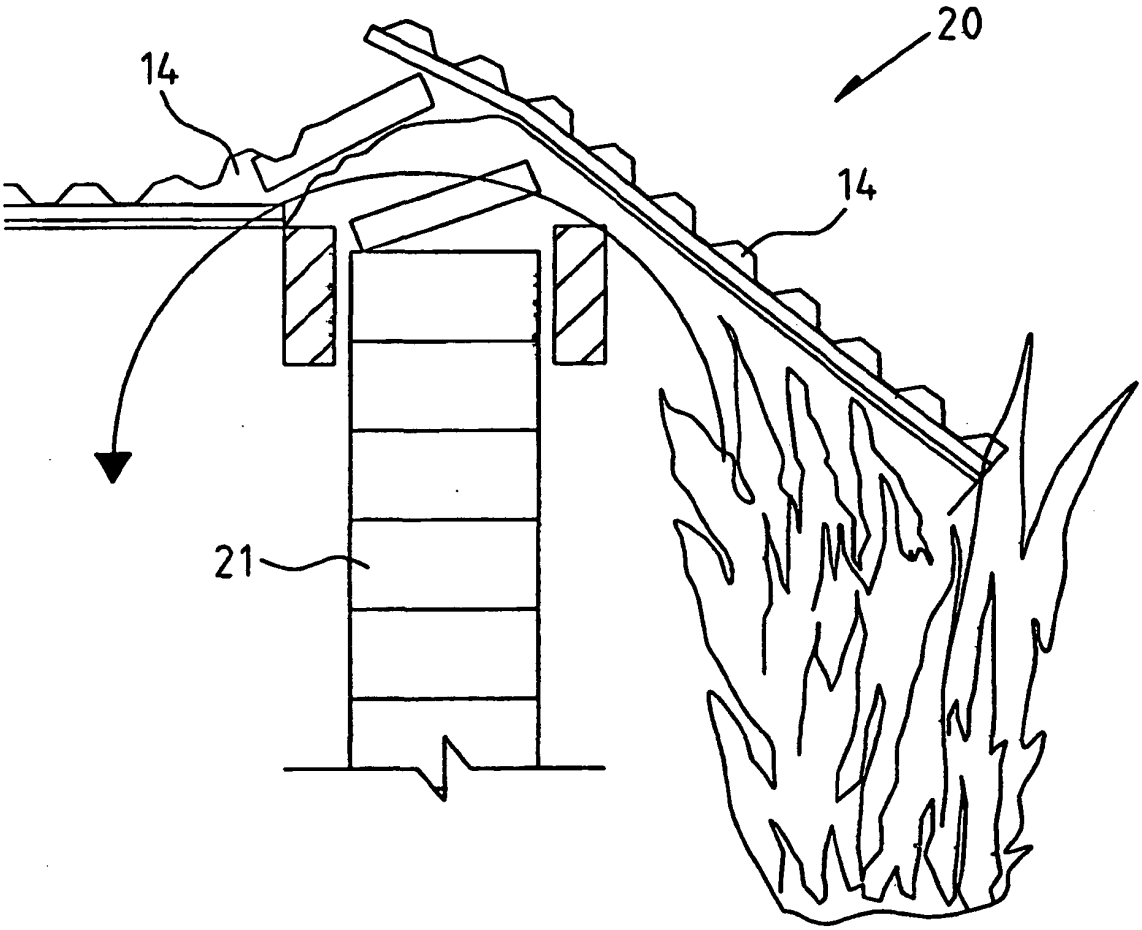

Fig. 4

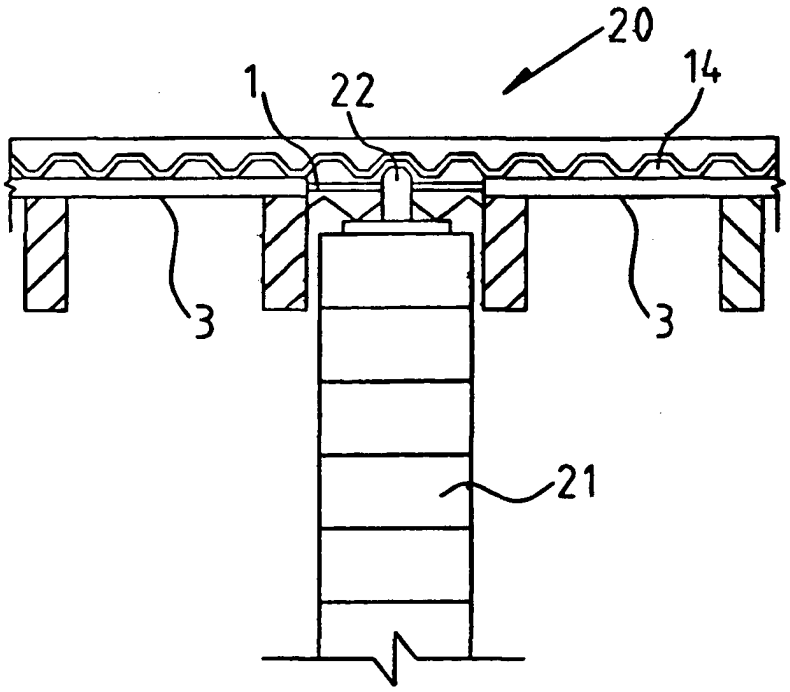

Fig. 5

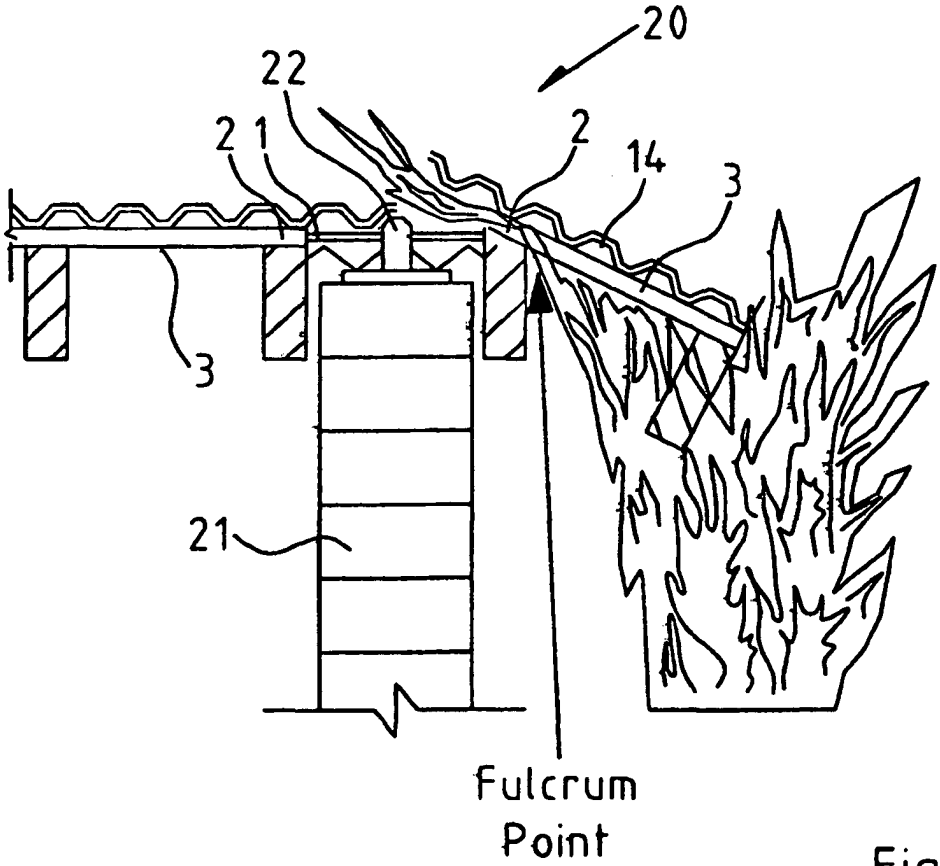

Fig. 6

REFERENCES CITED IN THE DESCRIPTION

This list of references cited by the applicant is for the reader's convenience only. It does not form part of the European patent document. Even though great care has been taken in compiling the references, errors or omissions cannot be excluded and the EPO disclaims all liability in this regard.

Patent documents cited in the description

- GB 2082647 A **[0003]**
- GB 2189827 A **[0004]**
- WO 2008090532 A **[0005]**