(19) Europäisches Patentamt
European Patent Office
Office européen des brevets

(11) **EP 2 716 556 A2**

(12) **EUROPEAN PATENT APPLICATION**
published in accordance with Art. 153(4) EPC

(43) Date of publication:
09.04.2014 Bulletin 2014/15

(21) Application number: **12789292.5**

(22) Date of filing: **17.05.2012**

(51) Int Cl.:
B65B 31/04 *(2006.01)* ***B65B 51/14*** *(2006.01)*

(86) International application number:
PCT/KR2012/003901

(87) International publication number:
WO 2012/161469 (29.11.2012 Gazette 2012/48)

(84) Designated Contracting States:
AL AT BE BG CH CY CZ DE DK EE ES FI FR GB GR HR HU IE IS IT LI LT LU LV MC MK MT NL NO PL PT RO RS SE SI SK SM TR

(30) Priority: **25.05.2011 KR 20110049598**
16.05.2012 KR 20120051763

(71) Applicants:
- **Rollpack Co., Ltd.**
  Gyeonggi-do 451-822 (KR)
- **Intropack. Co., Ltd**
  Gyeonggi-do 445-916 (KR)
- **Lee, Kyul-Joo**
  Chungcheongnam-do 343-814 (KR)

(72) Inventor: **LEE, Kyul-joo**
Sinpyeong-myeon, Dangjin-gun
Chungcheongnam-do 334-814 (KR)

(74) Representative: **Michalski Hüttermann & Partner Patentanwälte**
Speditionstraße 21
40221 Düsseldorf (DE)

(54) APPARATUS FOR VACUUM PACKING

(57) There is provided a vacuum packaging apparatus in whi ch a cover is operated to hermetically seal a vacuum chambe r to provide an evacuated environment by allowing the vacuu m chamber to be in a more complete vacuum state. The vacuu m packaging apparatus includes a lower body having a vacuum chamber connected to a vacuum generating device; a cover co nnected to the lower body to cover the vacuum chamber; and a vertical moving unit connected between the cover and the lower body to allow the cover to move upwardly and downward ly with respect to the lower body and closely contact the l ower body such that the vacuum chamber is hermetically seal ed when the vacuum generating device starts a vacuum creati ng operation.

【Figure 4】

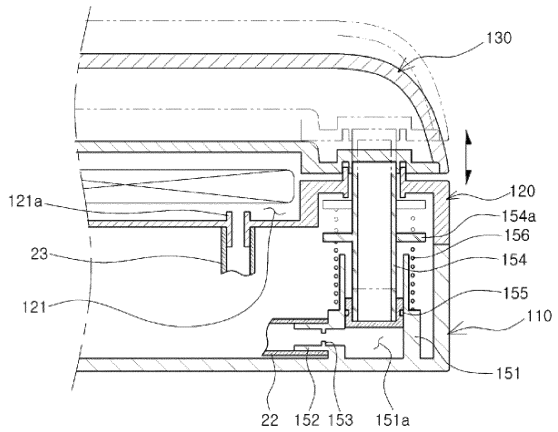

EP 2 716 556 A2

Description

[Technical Field]

[0001] The present invention relates to a vacuum packaging a pparatus, and more particularly, to a vacuum packaging appa ratus in which a cover is operated to hermetically seal a v acuum chamber to provide an evacuated environment by allowi ng the vacuum chamber to be in a more complete vacuum state

[Background Art]

[0002] In general, a vacuum packaging apparatus is configure d by hinge coupling of an upper case and a lower case, and is operated to perform vacuum packaging by closing the case after a vacuum wrapper is positioned between the upper case and the lower case.

[0003] A chamber-type vacuum packaging apparatus according t o the related art creates a vacuum within a wrapper by posi tioning an opening portion of the wrapper in a vacuum chamb er and withdrawing air from within the vacuum chamber using a vacuum pump or the like. After the vacuum is created usi ng the vacuum pump or the like, the opening portion of the wrapper is sealed by thermal fusion through a heating wire disposed at the front portion of the upper and lower cases to thereby complete vacuum packaging. This configuration i s disclosed in detail in Korean Utility Model No. 20-031970 0.

[0004] However, the related art vacuum packaging apparatus m ay start the creation of the vacuum in a state in which a u ser presses the upper case to hermetically seal the vacuum chamber, causing inconvenience in the use thereof.

[0005] Furthermore, since the user may find it difficult to press down on the upper case with steady pressure, a possib ility of failure to hermetically seal the vacuum chamber ma y exist, whereby the vacuum efficiency of the vacuum packag ing apparatus may not be uniform.

[0006] In addition, sealing members may be provided on a low er surface of the upper case and a lower surface of the low er case to be brought into contact with one another so as t o form the vacuum within the vacuum chamber, and the sealin g members may be rubber packing members or the like. As th e user continuously presses the upper case, the rubber pack ing members may be deformed and the upper and lower sealing members may fail to closely contact one another, whereby th e creation of the vacuum within the vacuum chamber may not be facilitated.

[Disclosure]

[Technical Problem]

[0007] An aspect of the present invention provides a vacuum packaging apparatus in which a cover is operated to complet ely seal a vacuum chamber when a vacuum creating operation is initiated, thereby providing an evacuated environment by allowing the vacuum chamber to be in a more complete vacuum state.

[0008] An aspect of the present invention also provides a va cuum packaging apparatus able to allow a vacuum chamber to be hermetically sealed even in the case that first and seco nd sealing pads are deformed by repetitive pressing, whereb y vacuum efficiency can be further improved.

[Technical Solution]

[0009] According to an aspect of the present invention, ther e is provided a vacuum packaging apparatus including: a low er body having a vacuum chamber connected to a vacuum gener ating device; a cover connected to the lower body to cover the vacuum chamber; and a vertical moving unit connected be tween the cover and the lower body to allow the cover to mo ve upwardly and downwardly with respect to the lower body a nd closely contact the lower body such that the vacuum cham ber is hermetically sealed when the vacuum generating devic e starts a vacuum creating operation.

[0010] The vertical moving unit may include a cylinder body disposed in the lower body and having an air intake port co nnected to the vacuum generating device and a hollow space connected to the air intake port; a piston having one end f ixed to the cover and the other end inserted into the hollo w space of the cylinder body and moving downwardly in a len gth direction of the cylinder body due to restoring force w hen the vacuum generating device starts the vacuum creating operation; and an elastic member having one end fixed to th e cylinder body, provided to surround the piston and moving upwardly in the length direction of the cylinder body when the vacuum generating device stops the vacuum creating oper ation.

[0011] The vertical moving unit may further include a guide member disposed to be adjacent to the piston, fixed to the cover, and guiding movement of the piston when the piston i s operated.

[0012] The air intake port may include an air intake hole ha ving a smaller inner diameter than that of an end of the ai r intake port.

[0013] The vacuum generating device may include a vacuum gen erating unit provided to withdraw air from within the vacuu m chamber and the hollow space of the cylinder body such th at the vacuum chamber and the hollow space may be vacuumize d; a first vacuum hose connecting the vacuum generating uni t to the air intake port of the cylinder body; a second vac uum hose connecting the vacuum generating unit to the vacuu m chamber; and a controlling unit connected to the vacuum g enerating unit and controlling the vacuum generating unit t o withdraw the air through at least one of the first vacuum hose and the second vacuum hose when the vacuum creating op eration is started.

[0014] The controlling unit may perform a first vacuum creat ing operation by allowing the air within the hollow

space o f the cylinder body to be withdrawn into the vacuum generat ing unit through the first vacuum hose such that the piston may move downwardly in the length direction of the cylinder body to allow the cover and the lower body to contact one a nother, and may perform a second vacuum creating operation by allowing the air within the vacuum chamber to be withdra wn into the vacuum generating unit through the second vacuu m hose. The second vacuum creating operation may be perfor med independently of and subsequent to the first vacuum cre ating operation or may be performed simultaneously with the first vacuum creating operation.

[0015] According to another aspect of the present invention, there is provided a vacuum packaging apparatus including a lower body having a vacuum chamber connected to a vacuum ge nerating device; a cover hinge-coupled to the lower body to cover the vacuum chamber and including a cover protrusion d isposed on a lower end portion thereof and inserted into a protrusion through hole provided in the lower body; and a l ocking unit fixing the cover to the lower body by allowing the cover protrusion to be fixedly inserted into the protru sion through hole when the cover is positioned to cover the vacuum chamber and the vacuum generating device starts a va cuum creating operation.

[0016] The locking unit may include a hook caught by a hook receiving hole formed in the cover protrusion to fix the co ver protrusion; a cylinder member having one end fixed to t he hook and the other end connected to the vacuum generatin g device and performing a reciprocating piston operation wh en the vacuum generating device starts the vacuum creating operation such that the hook may be caught by the hook rece iving hole; and an elastic member connected to the hook and allowing the hook to be separated from the hook receiving h ole due to restoring force when the vacuum generating devic e stops a vacuum creating operation.

[0017] The hook may have an upper end thereof bent and caugh t by the hook receiving hole, and a lower end of the hook m ay be hinge-coupled to a hinge member fixed to the lower bo dy such that the hook may pull the cover protrusion downwar dly while rotating at a predetermined angle using the hinge member as an axis of rotation when the cylinder member move s.

[0018] The cylinder member may include a cylinder body havin g a hollow space therein and installed in the lower body wh ile being connected to the vacuum generating device; and a piston having one end fixed to the hook and the other end i nserted into the hollow space of the cylinder body and movi ng in a length direction of the cylinder body when the vacu um generating device starts the vacuum creating operation.

[0019] The vacuum generating device may include a vacuum gen erating unit provided to withdraw air from within the vacuu m chamber and the hollow space of the cylinder body such th at the vacuum chamber and the hollow space may be vacuumize d; a first vacuum hose connecting the vacuum generating uni t to the cylinder body; a second vacuum hose connecting the vacuum generating unit to the vacuum chamber; and a control ling unit connected to the vacuum generating unit and contr olling the vacuum generating unit to withdraw the air throu gh at least one of the first vacuum hose and the second vac uum hose when the vacuum creating operation is started.

[0020] The controlling unit may perform a first vacuum creat ing operation by allowing the air within the hollow space o f the cylinder body to be withdrawn into the vacuum generat ing unit through the first vacuum hose such that the piston may be operated to allow the hook to be caught by the hook receiving hole, and may perform a second vacuum creating op eration by allowing the air within the vacuum chamber to be withdrawn into the vacuum generating unit through the secon d vacuum hose. The second vacuum creating operation may be performed simultaneously with the first vacuum creating ope ration.

[0021] The cylinder body may be integrated with the lower bo dy.

[0022] The vacuum chamber may include a first sealing pad di sposed on a circumference of an upper surface thereof, and the cover may include a second sealing pad disposed to be i n contact with the first sealing pad in order to create a v acuum in the vacuum chamber, and may further include an ela stic pressure member elastically pressing at least one of t he first sealing pad and the second sealing pad such that t he first sealing pad and the second sealing pad may closely contact one another.

[0023] The cover further may include a fixed lower plate for ming a bottom surface of the cover and fixedly installed; a nd a pressure plate spaced apart from the fixed lower plate , having the second sealing pad bonded to a lower surface t hereof, and movably installed, and the elastic pressure mem ber may be disposed between the fixed lower plate and the p ressure plate and elastically press the second sealing pad in a direction toward the first sealing pad.

[0024] The elastic pressure member may be provided to elasti cally press the second sealing pad in a direction toward th e first sealing pad, and the cover may further include a re ceiving groove having the elastic pressure member disposed therein and having the second sealing pad movably received therein.

[0025] The elastic pressure member may include a plurality o f elastic pressure members spaced apart from one another in a length direction of the second sealing pad.

[0026] The cover may further include a connection member con necting the second sealing pad to the receiving groove and elastically extended or contracted to allow the second seal ing pad to move by the elastic pressure member.

[Advantageous Effects]

[0027] Through the foregoing configurations of a vacuum pack aging apparatus according to embodiments of the invention, when a vacuum creating operation is started, a cover closel y contacts a lower body to completely seal a vacuum chamber , thereby creating an evacuated environment in which the va cuum chamber is able to achieve a more complete vacuum stat e, and improving the vacuum efficiency of a wrapper.

[0028] According to the embodiments of the invention, since an elastic pressure member elastically presses first and se cond sealing pads, the vacuum chamber can be hermetically s ealed even in the case that first and second sealing pads a re deformed by repetitive pressing, whereby the vacuum effi ciency of the wrapper can be further improved.

[Description of Drawings]

[0029]

FIG. 1 schematically illustrates the configuration of a vacuum packaging apparatus according to a first embodimen t of the invention;
FIG. 2 is a schematic perspective view of the vacuum packaging apparatus according to the first embodiment of th e invention;
FIG. 3 is a schematic exploded view of the vacuum pac kaging apparatus according to the first embodiment of the i nvention;
FIG. 4 is a cross-sectional view taken along line A-A of FIG. 2;
FIG. 5 is a cross-sectional view taken along line B-B of FIG. 2;
FIG. 6 is a schematic perspective view of a vacuum pa ckaging apparatus according to a second embodiment of the i nvention;
FIG. 7 schematically illustrates connections of eleme nts of a locking unit according to the second embodiment of the invention;
FIGS. 8 through 10 schematically illustrate operating states of the locking unit according to the second embodime nt of the invention;
FIG. 11 is a cross-sectional view of a vacuum packagi ng apparatus according to a third embodiment of the inventi on;
FIGS. 12 and 13 schematically illustrate operating st ates of an elastic pressure member according to the third e mbodiment of the invention;
FIG. 14 is a cross-sectional view of a vacuum packagi ng apparatus according to a fourth embodiment of the invent ion;
FIGS. 15 and 16 schematically illustrate operating st ates of an elastic pressure member according to the fourth embodiment of the invention;
FIG. 17 is a cross-sectional view illustrating the po sition of the elastic pressure member according to the four th embodiment of the invention; and
FIGS. 18A and 18B are cross-sectional views illustrat ing modified examples of the fourth embodiment of the inven tion.

[Best Mode]

[0030] Hereinafter, exemplary embodiments of the present inv ention will be described in detail with reference to the ac companying drawings.

[0031] The exemplary embodiments are suitable to improve the understanding of technical features of a vacuum packaging a pparatus according to the present inventive concept. The i nventive concept may, however, be embodied in many differen t forms and should not be construed as being limited to the embodiments set forth herein. Rather, these embodiments ar e provided so that this disclosure will be thorough and com plete, and will fully convey the scope of the invention to those skilled in the art.

First Embodiment

[0032] A vacuum packaging apparatus according to an embodime nt of the invention is an apparatus for creating a vacuum w ithin a wrapper by withdrawing air from within the wrapper. As illustrated in FIG. 1, the vacuum packaging apparatus ac cording to the present embodiment may be disposed in one si de of a housing 10 and may be connected to a vacuum generat ing device 20 and be controlled thereby.

[0033] As illustrated in FIGS. 1 and 2, a vacuum packaging a pparatus 100 according to the present embodiment may includ e a lower body 110 including a vacuum chamber 121 connected to the vacuum generating device 20, a cover 130 connected t o the lower body 110 to cover the vacuum chamber 121, and a vertical moving unit 150 connected between the cover 130 an d the lower body 110 while allowing the cover 130 to move u pwardly and downwardly with respect to the lower body 110.

[0034] In the present embodiment, the vacuum generating devi ce 20 connected to the vacuum packaging apparatus 100 may i nclude a vacuum generating unit connected to a cylinder bod y 151 of the vertical moving unit 150 via a first vacuum ho se 22 and connected to the vacuum chamber 121 via a second vacuum hose 23, and a controlling unit 27 connected between a button unit 137 of the cover 130 and the vacuum generatin g unit and controlling the operations of the vacuum generat ing unit. Here, the vacuum generating unit may include a v acuum pump 21 and a vacuum motor 25 driving the vacuum pump 21.

[0035] Meanwhile, according to the present embodiment, a vac uum chamber plate 120 may be installed on the lower body 11 0, the vacuum chamber plate 120 having the vacuum chamber 1 21 formed therein. Here, the vacuum chamber plate 120 may be integrated with the lower body 110 or may be separable f rom the lower body

110.

[0036] The cover 130 may be positioned above the lower body 110 to cover the vacuum chamber 121. Here, the lower body 110 and the cover 130 may be connected to one another by th e vertical moving unit 150.

[0037] In the present embodiment, the vacuum chamber plate 1 20 may be connected to an upper portion of the lower body 1 10. As illustrated in FIG. 2, the vacuum chamber plate 120 may include a heating wire 122 provided on an upper edge po rtion thereof and the vacuum chamber 121 spaced apart from the heating wire 122 by a predetermined interval and formin g a space therein.

[0038] In the present embodiment, the vacuum chamber 121 may include a chamber air suction port 121a connected to the se cond vacuum hose 23. The chamber air suction port 121a may protrude to have a predetermined height from a bottom surfa ce of the vacuum chamber 121 in order for moisture within t he vacuum chamber 121 to be kept from entering the second v acuum hose 23.

[0039] As illustrated in FIG. 3, the vacuum chamber plate 12 0 may include piston through holes 133 respectively formed in both end portions thereof and receiving the vertical mov ing unit 150 inserted thereinto, and a pair of guide holes 124 and 125 disposed at both sides of each piston through h ole 133 and serving to guide guide members to be described below.

[0040] In the embodiment of the invention, in order to avoid redundant explanations, the piston through hole 133 and the pair of guide holes 124 and 125 formed in any one end porti on of the vacuum chamber plate 120 will be described. For the convenience of explanation, the pair of guide holes are indicated as a first guide hole 124 and a second guide hole 125.

[0041] Meanwhile, according to the present embodiment, the c over 130 may be coupled to the lower body 110 to cover the vacuum chamber plate 120. Here, the cover 130 may be movab ly installed with respect to the lower body 110 such that a height thereof may be varied by the vertical moving unit 15 0.

[0042] The button unit 137 may be provided on an upper porti on of the cover 130 to be connected to the controlling unit 27 of the vacuum generating device 20. In the interior of the cover 130, a second sealing pad 131 having a shape corr esponding to a first sealing pad (not shown) disposed on an upper surface of the vacuum chamber 121 may be provided to seal the vacuum chamber 121, and a contact bar 132 may be b rought into contact with the heating wire 122 provided on t he vacuum chamber plate 120 to thereby seal a wrapper (not shown). Pistons 154 and guide members 158 and 159 of the v ertical moving unit 150 are fixed to both end portions of t he cover 130. Here, the first sealing pad and the second s ealing pad 131 may be formed of a sponge or the like able t o implement elastic compression.

[0043] Here, according to the embodiment of the invention, t he vertical moving unit 150 may be installed at each of end portions of the vacuum packaging apparatus 100 to adjust a height of the cover 130. In order to avoid redundant expla nations, the vertical moving unit 150 installed at any one end portion of the vacuum packaging apparatus 100 will be d escribed.

[0044] The vertical moving unit 150 in the embodiment of the invention, as illustrated in FIGS. 3 through 5, may include the cylinder body 151 provided in the lower body 110, the p iston 154 fixed to the cover 130, an elastic member 156 and the guide members 158 and 159, such that the vertical movin g unit 150 may adjust the height of the cover 130 to allow the cover 130 to be brought into contact with the lower bod y 110 or to allow the cover 130 to be spaced apart from the lower body 110.

[0045] As illustrated in FIGS. 4 and 5, the cylinder body 15 1 may protrude from a bottom surface of the lower body 110. Here, the cylinder body 151 may have a hollow cylindrical s hape, a top of which is open and a bottom of which is close d.

[0046] The cylinder body 151 may have an air intake port 152 connected to the first vacuum hose 22 of the vacuum generat ing device 20. Here, one end of the first vacuum hose 22 m ay be connected to the air intake port 152 and the other en d thereof may be connected to the vacuum pump 21 of the vac uum generating device 20.

[0047] According to the embodiment of the invention, the air intake port 152 may include an air intake hole 153 having a smaller inner diameter than that of an end of the air intak e port 152. In the case in which the air intake hole 153 i s provided in the air intake port 152, the air intake hole 153 may be integrated with the air intake port 152 in order to prevent the air intake hole 153 from being separated fro m the air intake port 152.

[0048] The air intake hole 153 may be provided to adjust int ensity of closing the lower body 110 by the cover 130 when air is withdrawn within from a hollow space 151a of the cyl inder body 151. For example, when the vacuum generating de vice 20 initiates the creation of the vacuum by allowing th e vacuum pump 21 to withdraw air from the hollow space 151a within the cylinder body 151, the velocity of air withdrawn by the vacuum pump 21 is decreased in a case in which a sec tional area of the air intake port 152 is relatively small as compared to a case in which the sectional area of the ai r intake port 152 is large. This allows the cover 130 to s lowly contact the lower body 110, whereby damage to the cov er 130 and the lower body 110 at a contact portion therebet ween may be prevented.

[0049] Meanwhile, according to the embodiment of the inventi on, one end of the piston 154 may be fitted into a piston r eceiving recess formed in an internal surface of the cover 130. A sealing ring 155 fixed to the other end of the pist on 154 may be inserted into the hollow space 151a of the cy linder body 151. Here, the other end of the piston 154 may be inserted into the cylinder body 151 by passing through t he piston through hole 133 formed in the vacuum chamber pla te 120.

[0050] In addition, a piston washer 154a may be disposed bet ween one end of the piston 154 and the other end thereof to fix the elastic member 156. Here, the piston

washer 154a m ay protrude from an external peripheral surface of the pist on 154 outwardly.

[0051] Meanwhile, according to the embodiment of the inventi on, the elastic member 156 may be disposed to surround the piston 154 in a space between the cylinder body 151 and the vacuum chamber plate 120. Here, one end of the elastic mem ber 156 may be fixed to the cylinder body 151 and the other end thereof may be fixed to the piston washer 154a. The el astic member 156 may be a spring.

[0052] According to the embodiment of the invention, the ela stic member 156 may allow the piston 154 to return back to the original position by elastic restoring force when the v acuum generating device 20 stops the vacuum creating operat ion, that is, the suction force exerted on the piston 154 b y the vacuum pump 21 is removed and the compressed state is released.

[0053] Meanwhile, the vacuum packaging apparatus 100 accordi ng to the embodiment of the invention may include a pair of guide members disposed adjacently to the side of the piston 154 so as to guide the movement of the piston 154. For the convenience of explanation, the pair of guide members are i ndicated as a first guide member 158 and a second guide mem ber 159.

[0054] The first and second guide members 158 and 159 may be spaced apart from the piston 154 by a predetermined interva l and be fixed to the internal surface of the cover 130. A s illustrated in FIGS. 3 through 5, the first guide member 158 may be disposed within the lower body 110 by penetratin g through the first guide hole 124 of the vacuum chamber pl ate 120, and the second guide member 159 may be disposed wi thin the lower body 110 by penetrating through the second g uide hole 125 of the vacuum chamber plate 120.

[0055] According to the embodiment of the invention, when th e piston 154 moves upwardly or downwardly, the first guide member 158 may move along the first guide hole 124 in the s ame direction as the movement of the piston 154 and the sec ond guide member 159 may move along the second guide hole 1 25 in the same direction as the movement of the piston 154 to thereby guide the upward and downward movements of the p iston 154.

[0056] Hereinafter, an operating method of the vacuum packag ing apparatus 100 according to the embodiment of the invent ion will be described with reference to FIGS. 4 and 5.

[0057] When a start button 138 of the button unit 137 on the cover 130 is selected or a user pushes the cover 130 to all ow a vacuum initiation signal to be input, the vacuum creat ing operation of the vacuum generating unit is initiated by the controlling unit 27 connected to the button unit 137. When the creation of the vacuum is initiated, the vacuum pu mp 21 is operated to withdraw air from the hollow space 151 a within the cylinder body 151 through the first vacuum hos e 22.

[0058] According to the embodiment of the invention, when th e start button 138 is selected or the cover 130 is pushed t o allow the vacuum initiation signal to be input, the contr olling unit 27 may perform a first vacuum creating operatio n by allowing the air within the hollow space 151a of the c ylinder body 151 to pass through the first vacuum hose 22 a nd to be withdrawn by the vacuum pump 21.

[0059] During the first vacuum creating operation of the con trolling unit 27, the vacuum pump 21 may withdraw the air f rom within the hollow space 151a of the cylinder body 151 t hrough the first vacuum hose 22. When the air within the h ollow space 151a of the cylinder body 151 starts to be with drawn by the vacuum pump 21, the piston 154 positioned with in the hollow space 151a of the cylinder body 151 may move down toward a bottom surface of the cylinder body 151 due t o the suction force of the vacuum pump 21.

[0060] As the piston 154 moves downwardly, the cover 130 con nected to one end of the piston 154 also moves downwardly t ogether with the piston 154 due to the suction force of the vacuum pump 21, such that the cover 130 may be brought into contact with the vacuum chamber plate 120 connected to the upper portion of the lower body 110.

[0061] At this time, the cover 130 may be coupled to the low er body 110 while closely contacting the vacuum chamber pla te 120 by the vertical moving unit 150, thereby preventing the vacuum chamber 121 from communicating with the outside. Accordingly, the vacuum packaging apparatus 100 may be oper ated to create a more complete vacuum state in the vacuum c hamber 121 when the wrapper is vacuum-packed.

[0062] Meanwhile, when the vacuum chamber 121 is hermeticall y sealed by the cover 130 by which the cover 130 closely co ntacts the vacuum chamber plate 120 through the above-descr ibed process, the controlling unit 27 performs a second vac uum creating operation. Here, the second vacuum creating o peration may be performed independently of and subsequent t o the first vacuum creating operation, or may be performed simultaneously with the first vacuum creating operation.

[0063] During the second vacuum creating operation of the co ntrolling unit 27, the vacuum pump 21 may withdraw the air from the wrapper (not shown) disposed in the vacuum chamber 121 through the second vacuum hose 23. When pressure withi n the vacuum chamber 121 reaches a predetermined level of p ressure to thereby completely create the vacuum in the wrap per, the wrapper may be sealed by thermal fusion using the heating wire 122 in contact with the contact bar 132.

[0064] Meanwhile, when the wrapper is vacuum-packed by compl eting the sealing thereof using the heating wire 122 or a s top button 139 is selected, the operation of the vacuum mot or 25 is stopped by the controlling unit 27 and the operati on of the vacuum pump 21 is stopped accordingly. When the operation of the vacuum pump 21 is stopped, pulling force o f the vertical moving unit 150 with respect to the piston 1 54 may be removed.

[0065] When the force applied to the piston 154 is removed, the compressed elastic member 156 may allow

the piston 154 to return back to the original position by the restoring fo rce. At this time, as the elastic member 156 moves upwardl y to the original position, the cover 130 fixed to one end of the piston 154 also moves upwardly, such that the cover 130 may be separated from the vacuum chamber plate 120.

[0066] In the above embodiment, the vacuum packaging apparat us moving upwardly and downwardly has been described. Here inafter, a vacuum packaging apparatus according to a second embodiment of the invention will be described with referenc e to FIGS. 6 through 10.

Second Embodiment

[0067] Now, a vacuum packaging apparatus according to a seco nd embodiment of the invention will be described. FIG. 6 i s a schematic perspective view of the vacuum packaging appa ratus according to the second embodiment of the invention, and FIG. 7 schematically illustrates connections of element s of a locking unit according to the second embodiment of t he invention. FIGS. 8 through 10 schematically illustrate o perating states of the locking unit according to the second embodiment of the invention.

[0068] A vacuum packaging apparatus 200 according to the sec ond embodiment of the invention may include a lower body 21 0, a cover 230 and a locking unit 250 as illustrated in FIG S. 6 and 7. Details and illustrations of the vacuum genera ting device 20, that is, the vacuum pump 21, the first vacu um hose 22, the second vacuum hose 23, the vacuum motor 25 and the controlling unit 27, having the same structures and the same functions as those described in the first embodime nt, and the structure and shape of a vacuum chamber 211 wil l be omitted, and the cover 230 and the locking unit 250 ha ving different features from the above-described first embo diment will be described in detail.

[0069] In the present embodiment, the vacuum chamber 211 may be disposed on an upper portion of the lower body 210 and t he cover 230 may be hinge-coupled thereto to cover the vacu um chamber 211. A sensor 215 for operating the vacuum gene rating device may be provided on an upper surface of the lo wer body 210, such that it may be operated by contacting a contact protrusion 237 provided on a lower surface of the c over 230 when the cover 230 is positioned to cover the vacu um chamber 211.

[0070] In the interior of the cover 230, a second sealing pa d 231 having the same shape as that of a first sealing pad 213 provided on an upper surface of the vacuum chamber 211 may be provided to seal the vacuum chamber 211 with the fir st sealing pad 213, and a contact bar 231 may be brought in to contact with a heating wire 212 to thereby seal a wrappe r. Here, the first sealing pad 213 and the second sealing pad 231 may be formed of a sponge or the like able to imple ment elastic compression.

[0071] Meanwhile, according to the present embodiment, a pro trusion through hole 214 may be formed in the upper surface of the lower body 210 such that a cover protrusion 235 may be inserted into an internal space of the lower body 210. Here, the protrusion through hole 214 may have a size suffi cient for the cover protrusion 235 to be easily inserted in to the lower body 210.

[0072] Meanwhile, the locking unit 250 may be installed in t he lower body 210 below the protrusion through hole 214. H ere, when the cover protrusion 235 passes through the protr usion through hole 214 and is inserted into the internal sp ace of the lower body 210 and the contact protrusion 237 of the cover 230 contacts the sensor 215 for operating the vac uum generating device to thereby start the operation of the vacuum generating device 20, the locking unit 250 may be ca ught by a hook receiving hole 236 of the cover protrusion 2 35, thereby fixing the cover 230 to the lower body 210.

[0073] In the present embodiment, as illustrated in FIG. 7, the locking unit 250 may include a hook 251 caught by the h ook receiving hole 236 formed in the cover protrusion 235, a cylinder member 253 connected to the hook 251, and an ela stic member 257.

[0074] In the present embodiment, a lower end of the hook 25 1 may be hinge-coupled to a hinge member 259 fixed to the l ower body 210. Here, an upper end of the hook 251 may be b ent to be caught by the hook receiving hole 236. A surface of a bent portion 251a of the hook in contact with the hook receiving hole 236 may be rounded to be easily inserted int o the hook receiving hole 236 while rotating at a predeterm ined angle using the hinge member 259 as the axis of rotati on when the cylinder member 253 moves.

[0075] Meanwhile, one surface of a portion of the hook 251 b etween the upper and lower ends of the hook 251 may be conn ected to the cylinder member 253 and the other surface ther eof may be connected to the elastic member 257. Here, one end of the elastic member 257 may be connected to the hook 251 and the other end thereof may be fixed to the lower bod y 210.

[0076] According to the embodiment of the invention, one end of the cylinder member 253 may be connected to the hook 251 and the other end thereof may be connected to the vacuum ge nerating device 20. Here, the cylinder member 253 may incl ude a cylinder body 255 having a hollow space therein, inte grated with the lower body 210 and connected to the vacuum generating device 20, and a piston 254 inserted into the cy linder body 255 and performing a reciprocating piston opera tion.

[0077] In the embodiment of the invention, the cylinder body 255 and the piston 254 have the same structure, shape and o perating method as those of the cylinder body 151 and the p iston 154 according to the first embodiment of the inventio n, and thus, details of the structure and shape of the cyli nder body 255 and the piston 254 according to the present e mbodiment will be omitted in order to avoid redundant expla nations.

[0078] However, unlike the piston of the first embodi-

ment, t he piston 254 may be installed in the lower body 210 to mov e laterally with respect to the cylinder body 255. In the present embodiment, in a state in which a portion of the pi ston 254 is inserted into the cylinder body 255, an end of the piston 254 may be connected to the hook 251.

[0079] Meanwhile, in the embodiment of the invention, one en d of the elastic member 257 may be fixed to the hook 251 an d the other end thereof may be fixed to the lower body 210. When the vacuum generating device 20 starts to create the v acuum and the piston 254 pulls the hook 251, the elastic me mber 257 may move in the same direction as the movement of the hook 251 to be extended thereby.

[0080] In a case in which the pulling force of the piston 25 4 with respect to the hook 251 is greater than the restorin g force of the hook 251, the hook 251 may move in the direc tion in which the piston 254 moves, and thus, the hook 251 may be caught by the hook receiving hole 236 formed in the cover protrusion 235. On the other hand, when the force ap plied to the piston 254 is removed, the elastic member 257 may return back to the original position by the restoring f orce.

[0081] Hereinafter, an operating method of the vacuum packag ing apparatus 200 according to the present embodiment will be described with reference to FIGS. 8 through 10.

[0082] When the cover 230 is positioned to cover the vacuum chamber 211, the cover protrusion 235 may penetrate through the protrusion through hole 214 to be inserted into the low er body 210 as illustrated in FIG. 8.

[0083] When the vacuum generating device 20 (see FIG. 1) sta rts to operate by which the contact protrusion 237 of the c over 230 contacts the sensor 215 for operating the vacuum g enerating device, the cylinder member 253 may move in a dir ection of an arrow as illustrated in FIG. 9 and pull the ho ok 251.

[0084] That is, when the creation of the vacuum is initiated , the controlling unit 27 may perform a first vacuum creati ng operation by allowing the air within the hollow space of the cylinder body 255 to be withdrawn to the vacuum generat ing unit through the first vacuum hose 22 and operating the piston 254 to allow the hook 251 to be caught by the hook r eceiving hole 236.

[0085] When the cylinder member 253 pulls the hook 251 in th e direction of the arrow as illustrated in FIG. 9, the hook 251 may be caught by the hook receiving hole 236 while rota ting at a predetermined angle using the hinge member 259 as the axis of rotation as illustrated in FIG. 10. Here, the hook 251 may pull the cover protrusion 235 downwardly while rotating at a predetermined angle in a state in which the b ent portion 251a of the hook is caught by the hook receivin g hole 236.

[0086] Therefore, the cover 230 may be connected to the lowe r body 210 while closely contacting the upper surface of th e lower body 210 by the locking unit 250. The vacuum packa ging apparatus 200 according to the embodiment of the inven tion may allow the cover 230 to closely contact the lower b ody 210 and prevent the vacuum chamber 211 from communicati ng with the outside, thereby creating an evacuated environm ent to allow the vacuum chamber 211 to be in a more complet e vacuum state and improving the vacuum efficiency of the w rapper.

[0087] Thereafter, the controlling unit 27 may perform a sec ond vacuum creating operation by allowing the air within th e vacuum chamber 211 to be withdrawn to the vacuum generati ng unit through the second vacuum hose 23. Here, the secon d vacuum creating operation may be performed simultaneously with the first vacuum creating operation.

[0088] When the wrapper is vacuum-packed by the above-descri bed process, the operation of the vacuum motor 25 is stoppe d by the controlling unit 27 and the operation of the vacuu m pump 21 is stopped accordingly. When the operation of th e vacuum pump 21 is stopped, the pulling force of the locki ng unit 250 with respect to the piston 254 may be removed.

[0089] When the force applied to the piston 254 is removed, the extended elastic member 257 may allow the hook 251 to r eturn back to the original position by the restoring force. At this time, as the elastic member 257 moves back to the o riginal position due to the restoring force, the hook 251 i s separated from the hook receiving hole 236, such that the cover 230 and the lower body 210 may be unlocked.

Third Embodiment

[0090] Hereinafter, a vacuum packaging apparatus according t o a third embodiment of the invention will be described. F IG. 11 is a cross-sectional view of the vacuum packaging ap paratus according to the third embodiment of the invention, and FIGS. 12 and 13 schematically illustrate operating stat es of an elastic pressure member according to the third emb odiment of the invention.

[0091] A vacuum packaging apparatus 300 according to the pre sent embodiment may include a first sealing pad 313, a seco nd sealing pad 331, and an elastic pressure member 350 as i llustrated in FIGS. 11 through 13. Here, details and illus trations of the vacuum generating device 20, that is, the v acuum pump 21, the first vacuum hose 22, the second vacuum hose 23, the vacuum motor 25 and the controlling unit 27, h aving the same structures and the same functions as those d escribed in the first embodiment, and the structure and sha pe of a vacuum chamber 321 will be omitted, and a cover 330 and the elastic pressure member 350 having different featur es from the above-described first embodiment will be descri bed in detail.

[0092] According to the embodiment of the invention, a vacuu m chamber plate 320 may be installed on the lower body 310, the vacuum chamber plate 320 having the vacuum chamber 321 formed therein. Here, the vacuum chamber plate 320 may be integrated with the lower body 310 or may be separable from the lower body 310.

In the present embodiment, the vacuum chamber 321 may be formed in the vacuum chamber plate 320 d isposed between the cover 330 and the lower body 310, and a lternatively, the vacuum chamber 321 may be integrated with the lower body 310.

[0093] The cover 330 may be positioned above the lower body 310 to cover the vacuum chamber 321. Here, the cover 330 a nd the lower body 310 may be connected to one another by th e vertical moving unit 150 (see the first embodiment), or t he cover 330 may be hinge-coupled to the lower body 310 (se e the second embodiment). In the present embodiment illust rated in FIGS. 14 through 17, the cover 330 moves upwardly and downwardly by the vertical moving unit, by way of examp le.

[0094] In addition, a heating wire 322 may be provided on an upper edge portion of the vacuum chamber plate 320 connecte d to the upper portion of the lower body 310 while being sp aced apart from the vacuum chamber 321. Furthermore, a con tact bar 332 may be disposed in the interior of the cover 3 30 to be brought into contact with the heating wire 322 to thereby seal a wrapper (not shown).

[0095] Meanwhile, in the vacuum packaging apparatus 300 acco rding to the embodiment of the invention, the vacuum chambe r 321 may include the first sealing pad 313 disposed on the circumference of an upper surface of the vacuum chamber 321 , and the cover 330 may include the second sealing pad 331 disposed to be in contact with the first sealing pad 313 to create a vacuum in the vacuum chamber 321 and may further i nclude the elastic pressure member 350 elastically pressing at least one of the first and second sealing pads 313 and 3 31 to allow the first and second sealing pads 313 and 331 t o closely contact one another.

[0096] The first sealing pad 313 may be disposed on the uppe r surface of the vacuum chamber 321 and may correspond to t he shape of the vacuum chamber 321. The second sealing pad 331 may have the same shape as that of the first sealing pa d 313, such that it may closely contact the first sealing p ad 313 when the cover 330 is closed, thereby hermetically s ealing the vacuum chamber 321. Accordingly, the vacuum sta te may be created in the vacuum chamber 321. Here, as desc ribed above, the first sealing pad 313 and the second seali ng pad 331 may be formed of a sponge, a rubber packing memb er, or the like, which is able to implement elastic compres sion.

[0097] The shape and material of the first sealing pad 313 a nd the second sealing pad 331 are not limited thereto, and various modified examples thereof may be implemented so lon g as the first sealing pad 313 and the second sealing pad 3 31 can closely contact one another to hermetically seal the vacuum chamber 321.

[0098] Meanwhile, according to the embodiment of the inventi on, the elastic pressure member 350 may be included to elas tically press at least one of the first sealing pad 313 and the second sealing pad 331, such that the first sealing pad 313 and the second sealing pad 331 may closely contact one another.

[0099] That is, with reference to FIG. 14, since the first s ealing pad 313 and the second sealing pad 331 are formed of a rubber packing member, a sponge, or the like, which is ab le to implement elastic compression, they may be deformed b y compressions as they are repeatedly pressed by closing th e cover 330. For example, as illustrated in FIG. 14, in a case in which the first sealing pad 313 is compressed to ha ve a deformed portion S, a height thereof is lowered as muc h as the deformed portion, and thus, even when the cover 33 0 is closed, the first sealing pad 313 may not closely cont act the second sealing pad 331.

[0100] Therefore, according to the embodiment of the inventi on, there is provided the elastic pressure member 350 press ing the first sealing pad 313 and the second sealing pad 33 1 to closely contact one another. Even in the case that th e first sealing pad 313 and the second sealing pad 331 are worn out and deformed, the elastic pressure member 350 may serve to press the first sealing pad 313 and the second sea ling pad 331 in a direction in which they contact one anoth er, thereby allowing them to closely contact one another.

[0101] Here, the elastic pressure member 350 may be provided to be initially in a compressed state when the cover 330 is closed. When the first sealing pad 313 or the second seali ng pad 331 is deformed, the elastic pressure member 350 may be extended due to restoring force, thereby pressing at lea st one of the first sealing pad 313 and the second sealing pad 331 to be closely in contact with one another.

[0102] Here, the elastic pressure member 350 may be an elast ic spring as illustrated. The elastic pressure member 350 is not limited to the elastic spring, but various modified examples thereof may be used so long as they can press at l east one of the first sealing pad 313 and the second sealin g pad 331 to be closely in contact with one another.

[0103] Meanwhile, in the present embodiment, the cover 330 m ay include a fixed lower plate 333 forming a bottom surface of the cover 330 and a pressure plate 335 spaced apart from the fixed lower plate 333, having the second sealing pad 33 1 bonded to a lower surface thereof, and movably installed.

[0104] The elastic pressure member 350 may be disposed betwe en the fixed lower plate 333 and the pressure plate 335 and elastically press the second sealing pad 331 in a direction toward the first sealing pad 313.

[0105] That is, as illustrated in FIG. 11, the fixed lower p late 333 may be integrated with the cover body to thereby f orm the bottom surface of the cover body. The pressure pla te 335 may have a shape corresponding to that of the fixed lower plate 333 and may be movably installed below the fixe d lower plate 333. Here, the cover 330 may include a catch portion 337 (see FIG. 11) protruding below the pressure pla te 335 and preventing the pressure plate 335 from being sep arated from the cover 330.

[0106] In addition, the second sealing pad 331 may be

bonded to the lower surface of the pressure plate 335. Since the shape of the second sealing pad 331 corresponds to that of the first sealing pad 331, when a user closes the cover 330 , the second sealing pad 331 contacts the first sealing pad 313 to thereby hermetically seal the vacuum chamber 321.

[0107] The elastic pressure member 350 may be disposed betwe en the fixed lower plate 333 and the pressure plate 335 and elastically pressing the movably installed pressure plate 3 35 in the direction toward the first sealing pad 313. Here , the elastic pressure member 350 may be provided in plural , the plurality of elastic pressure members 350 being space d apart from one another in a length direction of the secon d sealing pad 331.

[0108] The operations of the elastic pressure member 350 may be described with reference to FIGS. 12 and 13.

[0109] With reference to FIG. 12, in an initial operation of the vacuum packaging apparatus 300 according to the embodim ent of the invention, in a state in which the first sealing pad 313 and the second sealing pad 331 are not deformed, wh en the cover 330 is closed, the elastic pressure member 350 is compressed. That is, the elastic pressure member 350 ma y be disposed between the pressure plate 335 and the fixed lower plate 333 in a state of being initially compressed.

[0110] Thereafter, as repetitive pressing is applied thereto , when the first sealing pad 313 or the second sealing pad 331 is deformed and contracted as illustrated in FIG. 13, i n a state in which the cover 330 is closed, the elastic pre ssure member 350 may be extended due to the restoring force to thereby press the second sealing pad 331 in the directio n toward the first sealing pad 313.

[0111] Accordingly, even in the case in which the first seal ing pad 313 or the second sealing pad 331 is deformed and c ontracted by the repetitive pressing, the elastic pressure member 350 may press the second sealing pad 331 such that t he first sealing pad 313 and the second sealing pad 331 may closely contact one another. Therefore, the vacuum chamber 321 may be hermetically sealed, whereby the vacuum efficien cy of the wrapper (not shown) may be continuously maintaine d at a level the same as that of the initial state.

Fourth Embodiment

[0112] Hereinafter, a vacuum packaging apparatus according t o a fourth embodiment of the invention will be described. FIG. 14 is a cross-sectional view of the vacuum packaging a pparatus according to the third embodiment of the invention , and FIGS. 15 and 16 schematically illustrate operating st ates of an elastic pressure member according to the third e mbodiment of the invention. FIG. 17 is a cross-sectional v iew illustrating the position of the elastic pressure membe r according to the third embodiment of the invention, and F IG. 18A and 18B are cross-sectional views illustrating modi fied examples of the third embodiment of the invention.

[0113] A vacuum packaging apparatus 400 according to the emb odiment of the invention may include a first sealing pad 41 3, a second sealing pad 431 and an elastic pressure member 450 as illustrated in FIGS. 14 through 18. As in the third embodiment, the elastic pressure member 450 elastically pre ssing the first sealing pad or the second sealing pad may b e included in the present embodiment, but is different in t erms of installation method and structure. Therefore, deta ils and illustrations of the same elements as those describ ed in the first and third embodiments will be omitted, and the installation and operation of the elastic pressure memb er 450 distinguishable from those of the third embodiment w ill be described below.

[0114] Meanwhile, the elastic pressure member 450 may be dis posed to elastically press the second sealing pad 431 in a direction toward the first sealing pad 413. A cover 430 ma y include a receiving groove 433 having the elastic pressur e member 450 disposed therein and having the second sealing pad 430 movably received therein.

[0115] Meanwhile, as illustrated in FIG. 17, the elastic pre ssure member 450 may be provided in plural, the plurality o f elastic pressure members 450 being spaced apart from one another in a length direction of the second sealing pad 431

[0116] The receiving groove 433 may have the same shape as t hat of the second sealing pad 431, and the second sealing p ad 431 may be inserted into the receiving groove 433 while forming a closed section. The plurality of elastic pressur e members 450 may be spaced apart from one another between an internal surface of the receiving groove 433 and the sec ond sealing pad 431.

[0117] Here, the receiving groove 433 may be formed as a sin gle groove as illustrated in FIG. 17. Although not shown, the receiving groove 433 may be formed as a plurality of gr ooves receiving the plurality of elastic pressure members 4 50, respectively.

[0118] In addition, with reference to FIGS. 14 through 16, a guide groove 433a may be formed in the receiving groove 433 and a protrusion 431a may be formed on the second sealing p ad 431. The protrusion 431a may be installed to move along the guide groove 433a and the second sealing pad 431 may mo ve according to the compression or extension of the elastic pressure member 450. As the protrusion 431a is caught by t he guide groove 433a, the second sealing pad 431 may be pre vented from being separated from the receiving groove 433.

[0119] Here, a pressure plate 437 may be bonded to an upper surface of the second sealing pad 431. The pressure plate 437 may be formed of a material having greater intensity th an the second sealing pad 431. For example, the pressure p late 437 may be formed of plastic or metal. Accordingly, t he pressure plate 437 may prevent the upper surface of the second sealing pad 431 from being deformed when the elastic pressure member 450 presses the second sealing pad 431.

[0120] Meanwhile, the operation of the elastic pressure

memb er 450 will be described with reference to FIGS. 15 and 16. With reference to FIG. 15, in an initial operation of the v acuum packaging apparatus 400 according to the embodiment o f the invention, in a state in which the first sealing pad 413 and the second sealing pad 431 are not deformed, when t he cover 430 is closed, the elastic pressure member 450 may be compressed. That is, the elastic pressure member 450 ma y be disposed between the receiving groove 433 and the seco nd sealing pad 431 in a state of being initially compressed

[0121] Thereafter, as repetitive pressing is applied thereto , when the first sealing pad 413 or the second sealing pad 431 is deformed and contracted as illustrated in FIG. 16, i n a state in which the cover 430 is closed, the elastic pre ssure member 450 may be extended due to restoring force to thereby press the second sealing pad 431 in the direction t oward the first sealing pad 413.

[0122] Accordingly, even in the case in which the first seal ing pad 413 or the second sealing pad 431 is deformed and c ontracted by the repetitive pressing, the elastic pressure member 450 may press the second sealing pad 431 such that t he first sealing pad 413 and the second sealing pad 431 may closely contact one another. Therefore, a vacuum chamber 4 21 may be hermetically sealed, whereby vacuum efficiency of a wrapper (not shown) may be continuously maintained at a l evel the same as that of the initial state.

[0123] Meanwhile, a modification of the fourth embodiment wi 11 be described with reference to FIG. 18.

[0124] The vacuum packaging apparatus 400 according to the e mbodiment of the invention may further include a connection member 435 connecting the second sealing pad 431 to the rec eiving groove 433 and being elastically extended or contrac ted to allow the second sealing pad 431 to move by the elas tic pressure member 450.

[0125] That is, in the embodiment illustrated in FIGS. 14 th rough 16, the guide groove 433a and the protrusion 431a may guide the movement of the second sealing pad 431 to thereby prevent the second sealing pad 431 from being separated fro m the receiving groove 433; however, in the present embodim ent, the connection member 435 may perform such a function.

[0126] Specifically, in the present embodiment, the cover 43 0 may further include the connection member 435 connecting the second sealing pad 431 to the receiving groove 433 and being elastically extended or contracted to allow the secon d sealing pad 431 to move by the elastic pressure member 45 0.

[0127] That is, one end of the connection member 435 may be bonded to the receiving groove 433, and the other end there of may be bonded to the second sealing pad 431 such that th e connection member 435 may connect the second sealing pad 431 to the receiving groove 433. Here, the connection memb er 435 may be thinner than the second sealing pad 431 and m ay be formed of a ductile material.

[0128] Accordingly, the connection member 435 may prevent th e second sealing pad 431 from being separated from the rece iving groove 431. In addition, the connection member 435 m ay be elastically contracted or extended according to the c ompression or extension of the elastic pressure member 450 to thereby allow the second sealing pad 431 to be installed movably.

[0129] FIG. 18A illustrates that the elastic pressure member 450 is compressed and the connection member 435 is contract ed, and FIG. 18B illustrates that the elastic pressure memb er 450 is extended to press the second sealing pad 431 and the connection member 435 is extended accordingly.

[0130] As described in the first and second embodiments, whe n the vacuum creating operation is initiated using the vacu um pump allowing the vacuum chamber to be vacuumized, the v acuum packaging apparatus according to the embodiment of th e invention may automatically allow the cover and the lower body to closely contact one another and prevent the vacuum chamber from communicating with the outside, thereby creati ng an evacuated environment, in which the vacuum chamber ac hieves a more complete vacuum state, and improving the vacu um efficiency of the wrapper.

[0131] In the third embodiment, since the elastic pressure m ember elastically presses the first sealing pad and the sec ond sealing pad, the vacuum chamber may be hermetically sea led even in the case in which the first and second sealing pads are deformed or the like due to repetitive pressing, w hereby the vacuum efficiency of the wrapper may be further improved.

[0132] While the present invention has been shown and descri bed in connection with the exemplary embodiments, it will b e apparent to those skilled in the art that modifications a nd variations can be made without departing from the spirit and scope of the invention as defined by the appended claim s.

Claims

1. A vacuum packaging apparatus comprising:

a lower body having a vacuum chamber connected to a v acuum generating device;
a cover connected to the lower body to cover the vacu um chamber; and
a vertical moving unit connected between the cover an d the lower body to allow the cover to move upwardly and do wnwardly with respect to the lower body and closely contact the lower body such that the vacuum chamber is hermetically sealed when the vacuum generating device starts a vacuum cr eating operation.

2. The vacuum packaging apparatus of claim 1, wherein th e vertical moving unit includes:

a cylinder body disposed in the lower body and

having an air intake port connected to the vacuum generating devic e and a hollow space connected to the air intake port;
a piston having one end fixed to the cover and the ot her end inserted into the hollow space of the cylinder body and moving downwardly in a length direction of the cylinder body due to restoring force when the vacuum generating devi ce starts the vacuum creating operation; and
an elastic member having one end fixed to the cylinde r body, provided to surround the piston and moving upwardly in the length direction of the cylinder body when the vacuu m generating device stops the vacuum creating operation.

3. The vacuum packaging apparatus of claim 2, wherein th e vertical moving unit further includes a guide member disp osed to be adjacent to the piston, fixed to the cover, and guiding movement of the piston when the piston is operated.

4. The vacuum packaging apparatus of claim 2, wherein th e air intake port includes an air intake hole having a smal ler inner diameter than that of an end of the air intake po rt.

5. The vacuum packaging apparatus of claim 2, wherein th e vacuum generating device includes:

a vacuum generating unit provided to withdraw air fro m within the vacuum chamber and the hollow space of the cyl inder body such that the vacuum chamber and the hollow spac e are vacuumized;
a first vacuum hose connecting the vacuum generating unit to the air intake port of the cylinder body;
a second vacuum hose connecting the vacuum generating unit to the vacuum chamber; and
a controlling unit connected to the vacuum generating unit and controlling the vacuum generating unit to withdraw the air through at least one of the first vacuum hose and t he second vacuum hose when the vacuum creating operation is started.

6. The vacuum packaging apparatus of claim 5, wherein th e controlling unit performs a first vacuum creating operati on by allowing the air within the hollow space of the cylin der body to be withdrawn into the vacuum generating unit th rough the first vacuum hose such that the piston moves down wardly in the length direction of the cylinder body to allo w the cover and the lower body to contact one another, and performs a second vacuum creating operation by allowing the air within the vacuum chamber to be withdrawn into the vacu um generating unit through the second vacuum hose, and
the second vacuum creating operation is performed ind ependently of and subsequent to the first vacuum creating o peration or is performed simultaneously with the first vacu um creating operation.

7. A vacuum packaging apparatus comprising:

a lower body having a vacuum chamber connected to a v acuum generating device;
a cover hinge-coupled to the lower body to cover the vacuum chamber and including a cover protrusion disposed on a lower end portion thereof and inserted into a protrusion through hole provided in the lower body; and
a locking unit fixing the cover to the lower body by allowing the cover protrusion to be fixedly inserted into t he protrusion through hole when the cover is positioned to cover the vacuum chamber and the vacuum generating device s tarts a vacuum creating operation.

8. The vacuum packaging apparatus of claim 7, wherein th e locking unit includes:

a hook caught by a hook receiving hole formed in the cover protrusion to fix the cover protrusion;
a cylinder member having one end fixed to the hook an d the other end connected to the vacuum generating device a nd performing a reciprocating piston operation when the vac uum generating device starts the vacuum creating operation such that the hook is caught by the hook receiving hole; an d
an elastic member connected to the hook and allowing the hook to be separated from the hook receiving hole due t o restoring force when the vacuum generating device stops a vacuum creating operation.

9. The vacuum packaging apparatus of claim 8, wherein th e hook has an upper end thereof bent and caught by the hook receiving hole, and
a lower end of the hook is hinge-coupled to a hinge m ember fixed to the lower body such that the hook pulls the cover protrusion downwardly while rotating at a predetermin ed angle using the hinge member as an axis of rotation when the cylinder member moves.

10. The vacuum packaging apparatus of claim 8, wherein th e cylinder member includes:

a cylinder body having a hollow space therein and ins talled in the lower body while being connected to the vacuu m generating device; and
a piston having one end fixed to the hook and the oth er end inserted into the hollow space of the cylinder body and moving in a length direc-

tion of the cylinder body when the vacuum generating device starts the vacuum creating ope ration.

11. The vacuum packaging apparatus of claim 10, wherein t he vacuum generating device includes:

a vacuum generating unit provided to withdraw air fro m within the vacuum chamber and the hollow space of the cyl inder body such that the vacuum chamber and the hollow spac e are vacuumized;
a first vacuum hose connecting the vacuum generating unit to the cylinder body;
a second vacuum hose connecting the vacuum generating unit to the vacuum chamber; and
a controlling unit connected to the vacuum generating unit and controlling the vacuum generating unit to withdraw the air through at least one of the first vacuum hose and t he second vacuum hose when the vacuum creating operation is started.

12. The vacuum packaging apparatus of claim 11, wherein t he controlling unit performs a first vacuum creating operat ion by allowing the air within the hollow space of the cyli nder body to be withdrawn into the vacuum generating unit t hrough the first vacuum hose such that the piston is operat ed to allow the hook to be caught by the hook receiving hol e, and performs a second vacuum creating operation by allow ing the air within the vacuum chamber to be withdrawn into the vacuum generating unit through the second vacuum hose, and
the second vacuum creating operation is performed sim ultaneously with the first vacuum creating operation.

13. The vacuum packaging apparatus of claim 2 or 10, wher ein the cylinder body is integrated with the lower body.

14. The vacuum packaging apparatus of any one of claims 1 to 12, wherein the vacuum chamber includes a first sealing pad disposed on a circumference of an upper surface thereof , and
the cover includes a second sealing pad disposed to b e in contact with the first sealing pad in order to create a vacuum in the vacuum chamber, and further includes an ela stic pressure member elastically pressing at least one of t he first sealing pad and the second sealing pad such that t he first sealing pad and the second sealing pad closely con tact one another.

15. The vacuum packaging apparatus of claim 14, wherein t he cover further includes:

a fixed lower plate forming a bottom surface of the c over and fixedly installed; and
a pressure plate spaced apart from the fixed lower pl ate, having the second sealing pad bonded to a lower surfac e thereof, and movably installed, and
the elastic pressure member is disposed between the f ixed lower plate and the pressure plate and elastically pre sses the second sealing pad in a direction toward the first sealing pad.

16. The vacuum packaging apparatus of claim 14, wherein t he elastic pressure member is provided to elastically press the second sealing pad in a direction toward the first seal ing pad, and
the cover further includes a receiving groove having the elastic pressure member disposed therein and having the second sealing pad movably received therein.

17. The vacuum packaging apparatus of claim 16, wherein t he elastic pressure member comprises a plurality of elastic pressure members spaced apart from one another in a length direction of the second sealing pad.

18. The vacuum packaging apparatus of claim 16, wherein t he cover further includes a connection member connecting th e second sealing pad to the receiving groove and elasticall y extended or contracted to allow the second sealing pad to move by the elastic pressure member.

【Figure 1】

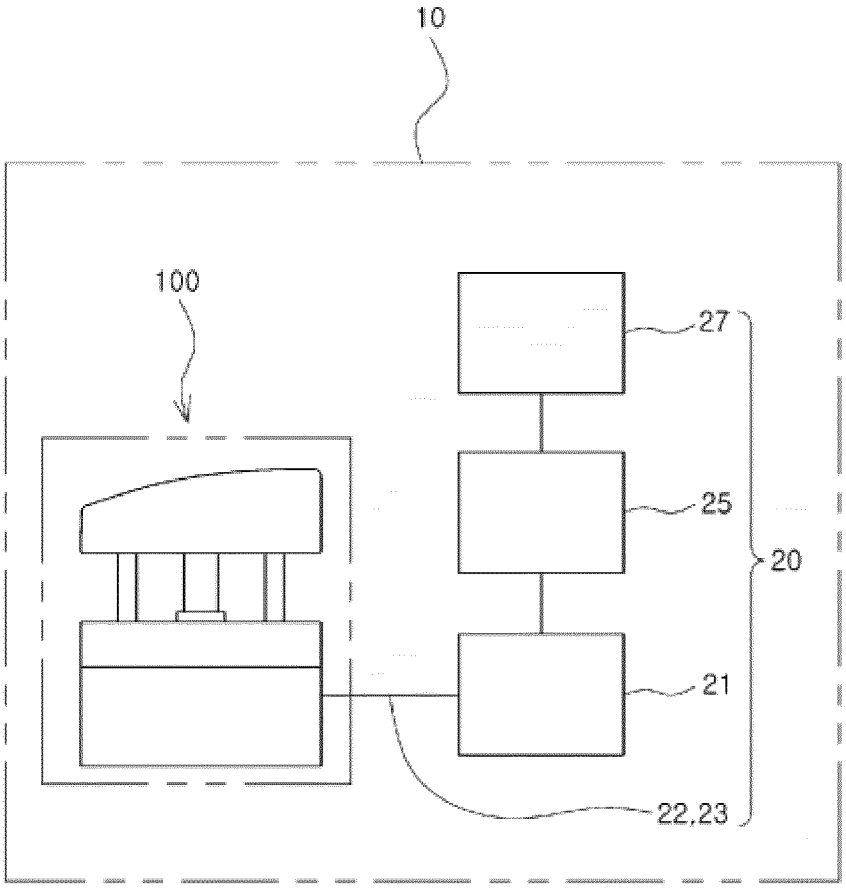

【Figure 2】

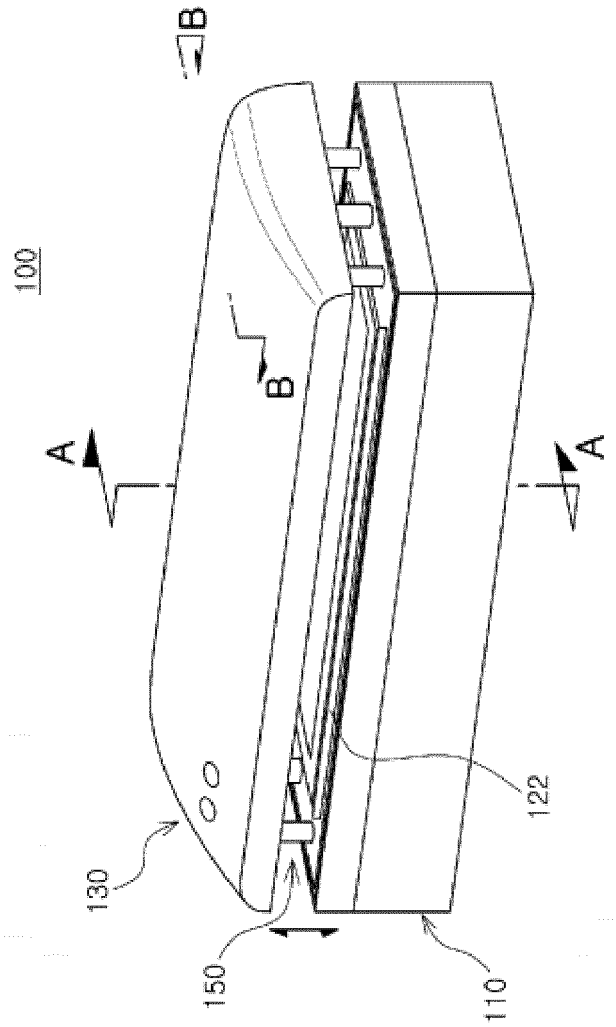

【Figure 3】

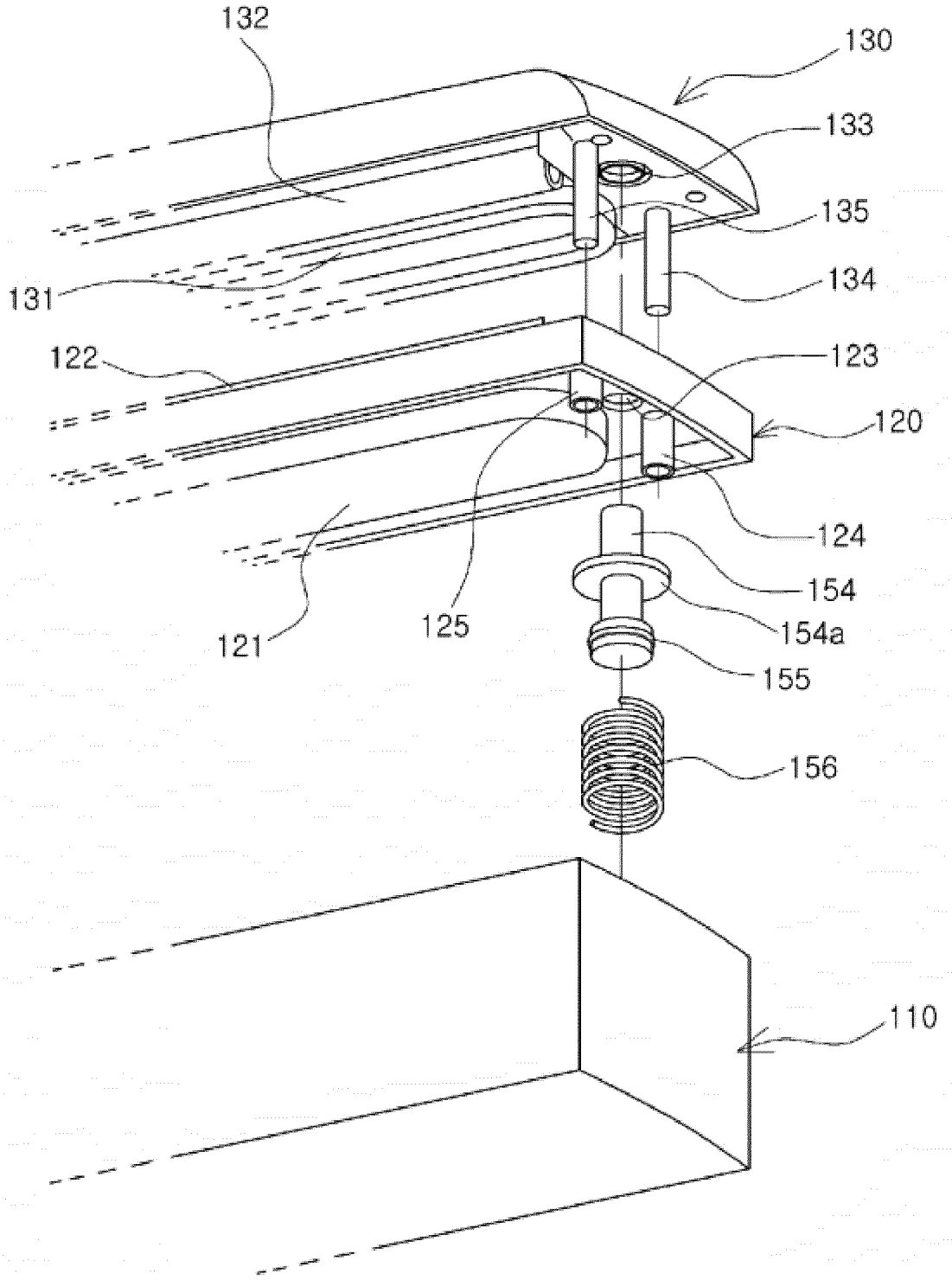
132
130
133
135
134
131
122
123
120
124
154
154a
155
125
121
156
110

【Figure 4】

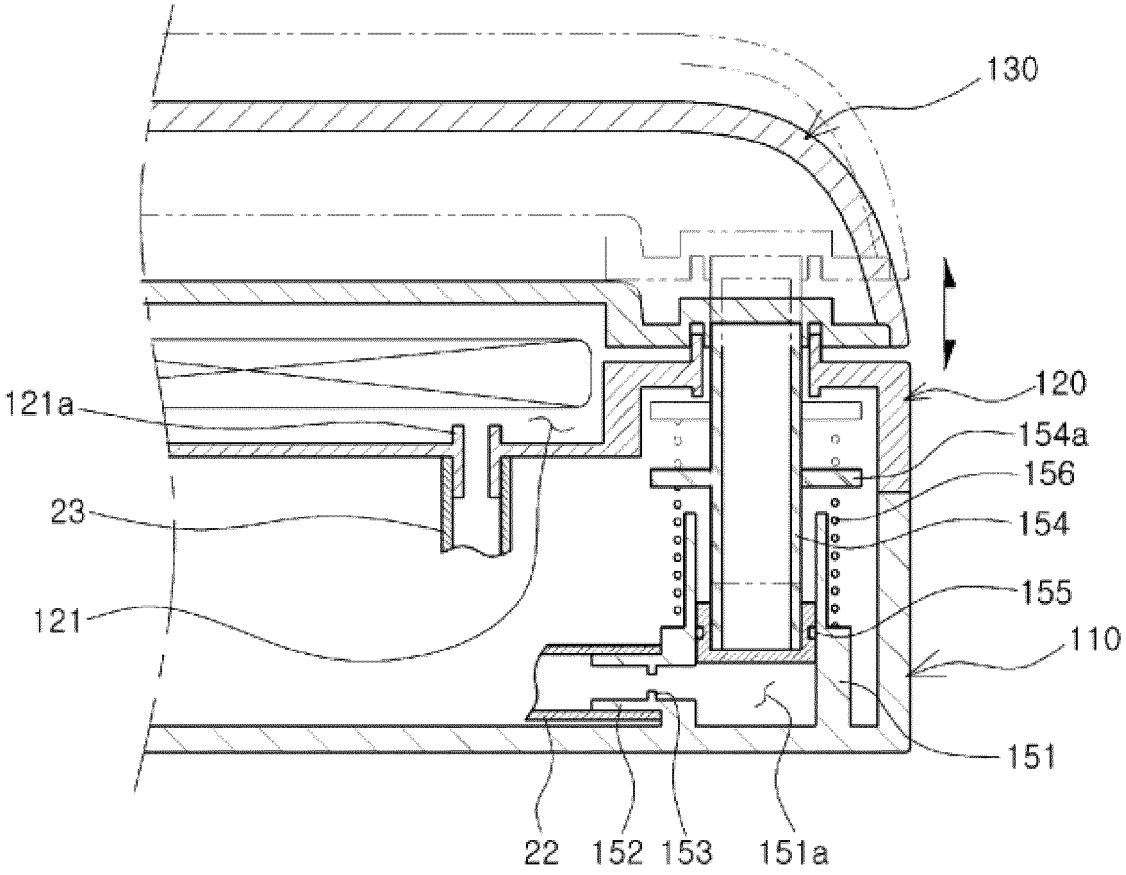

【Figure 5】

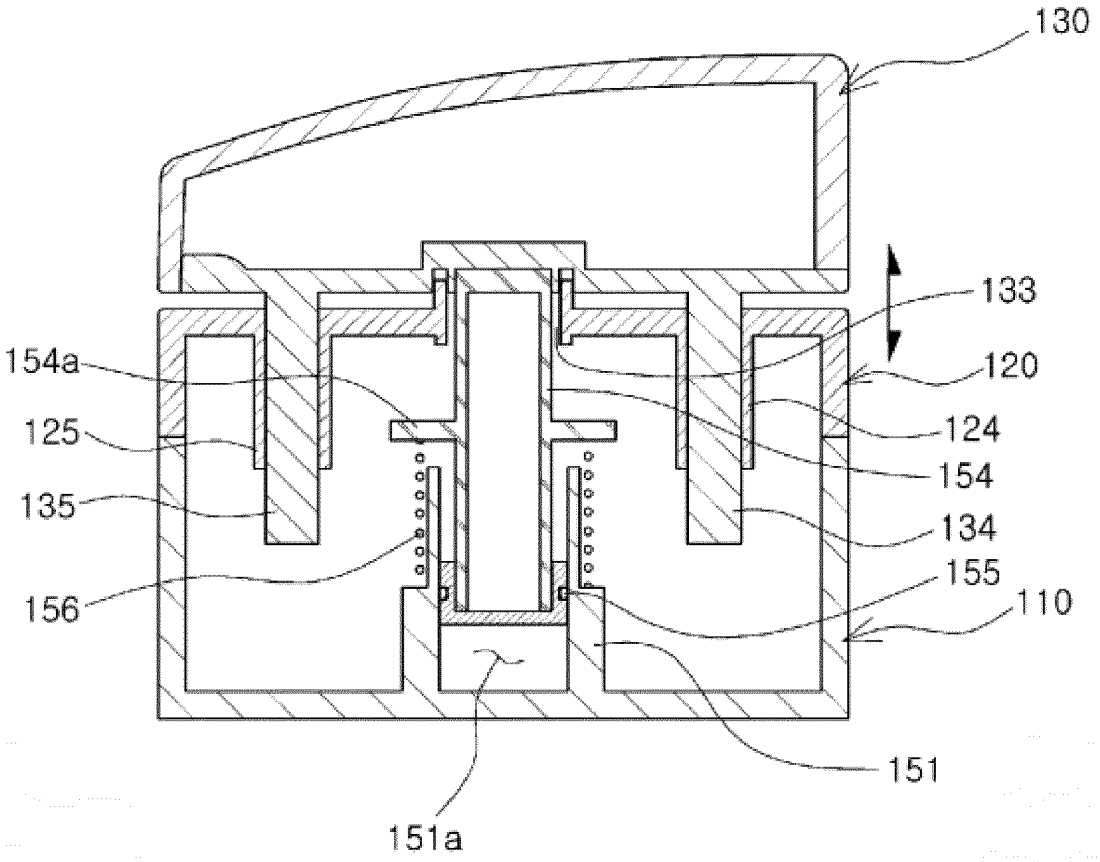

【Figure 6】

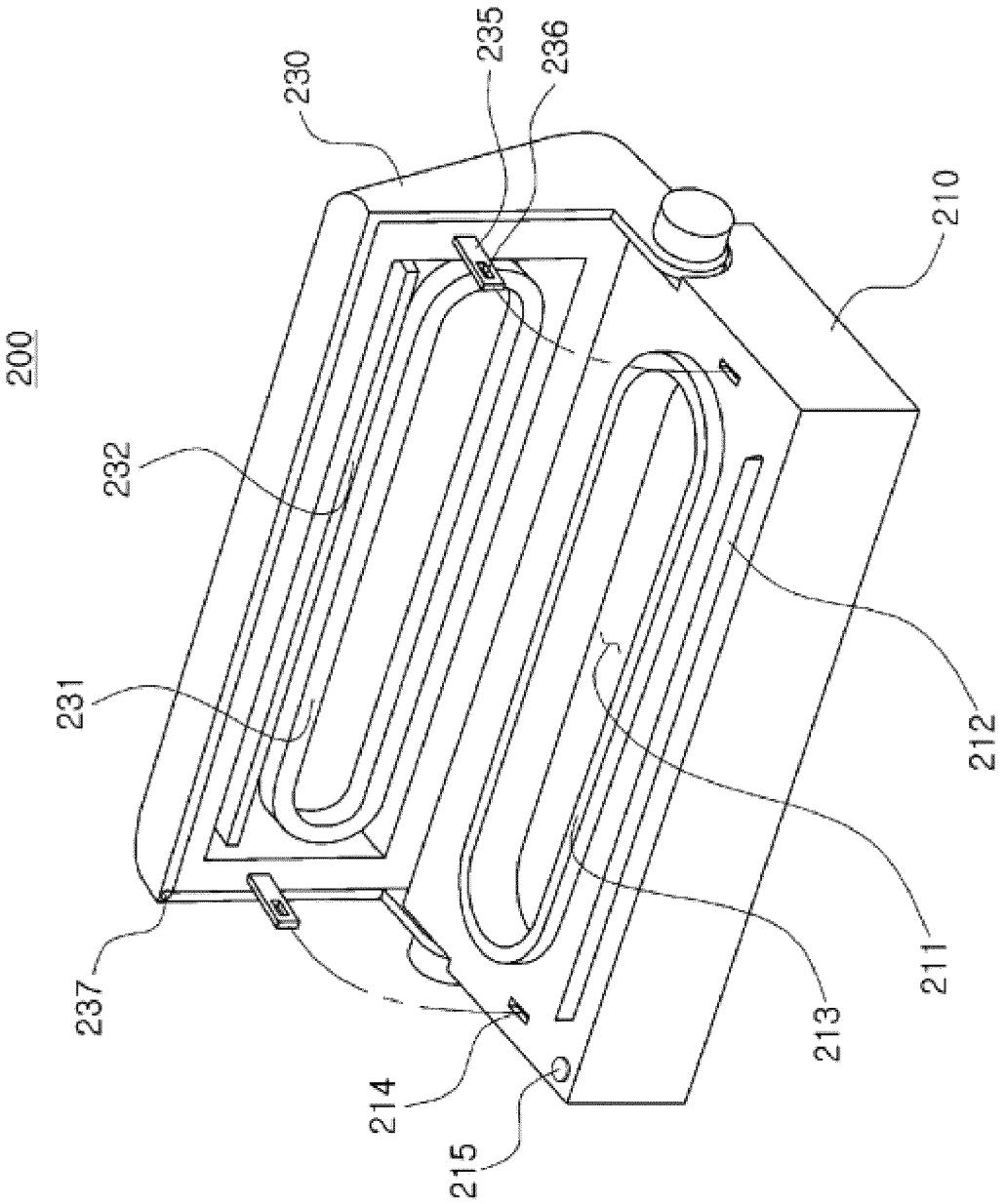

【Figure 7】

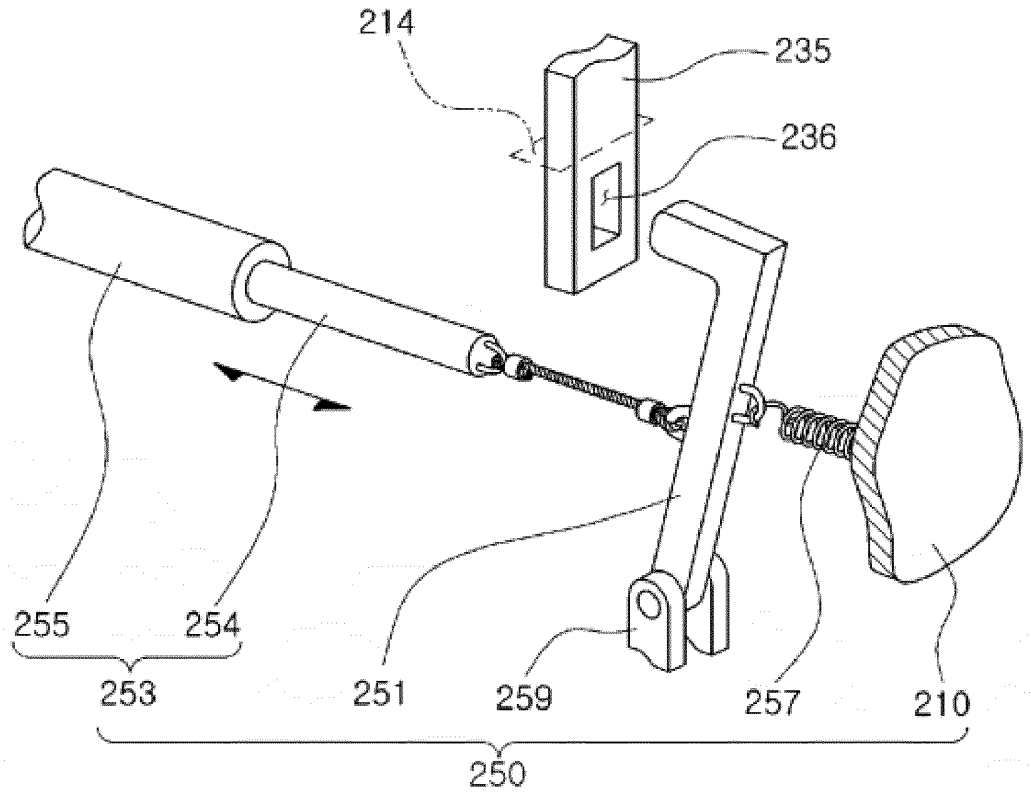

【Figure 8】

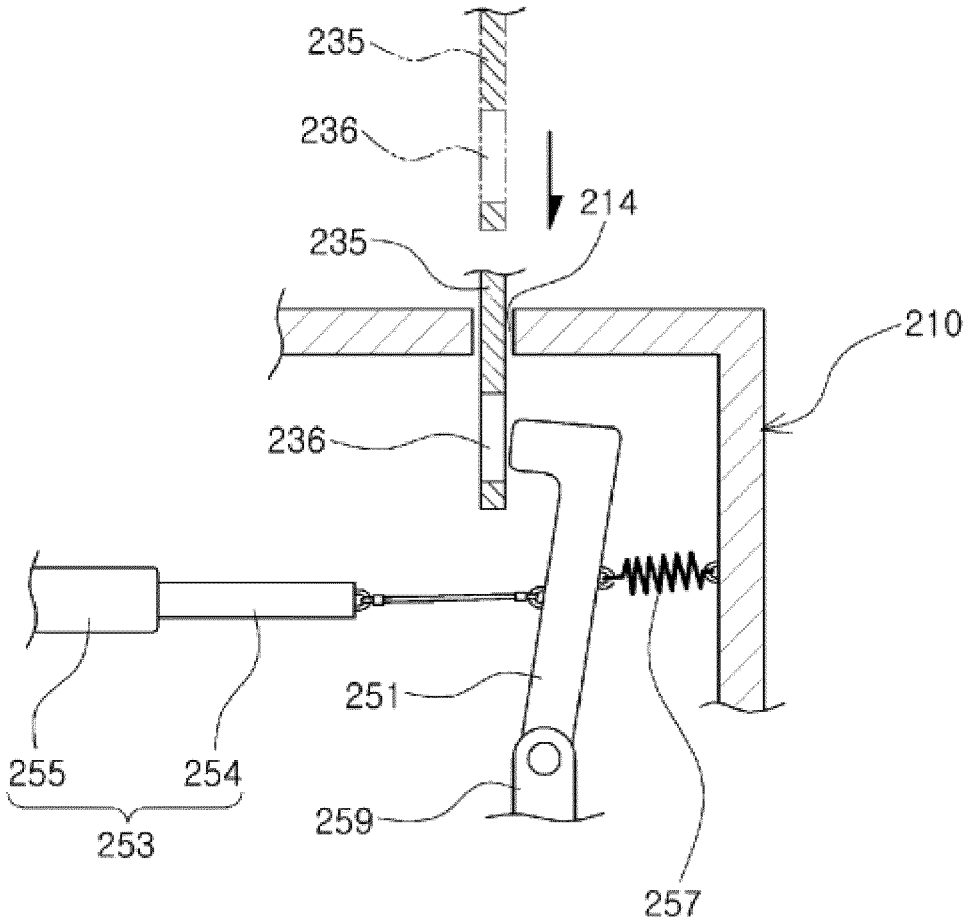

【Figure 9】

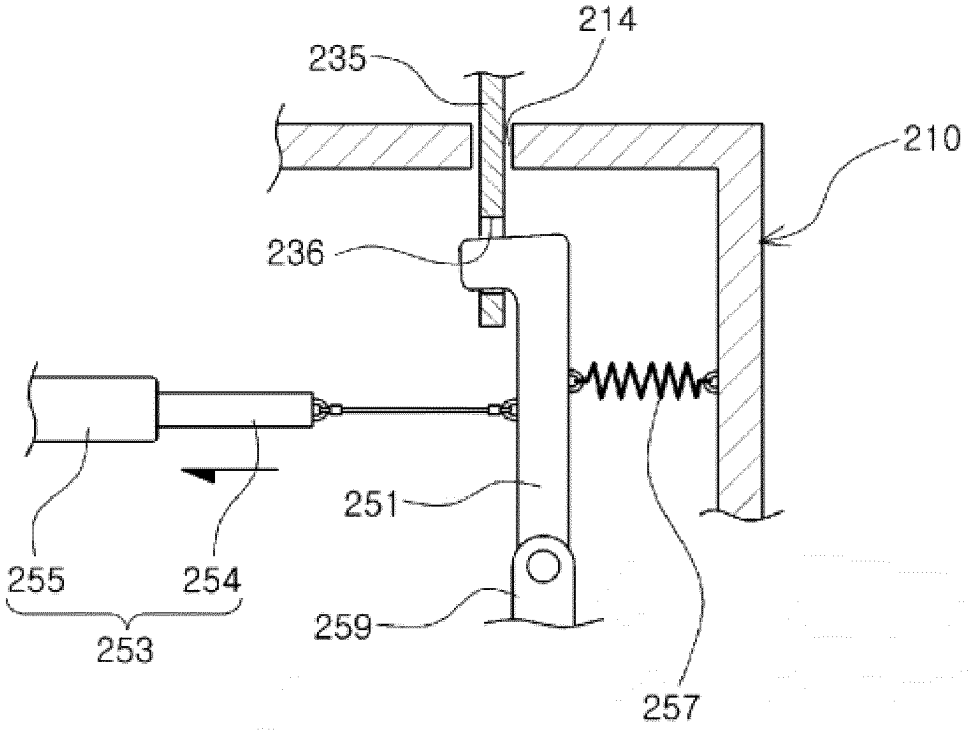

【Figure 10】

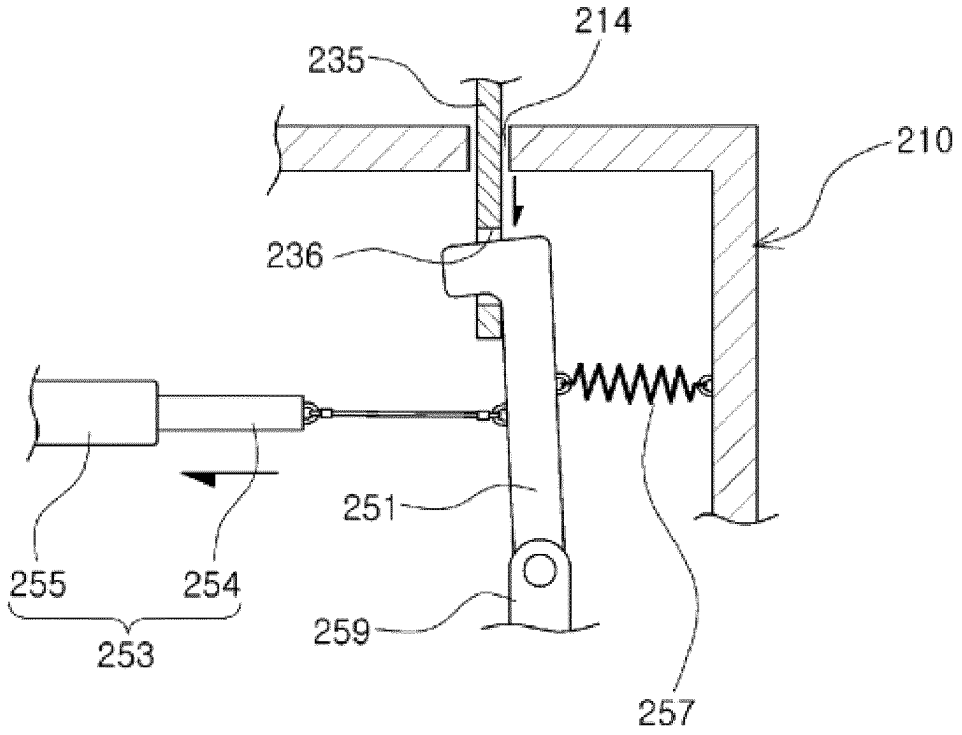

【Figure 11】

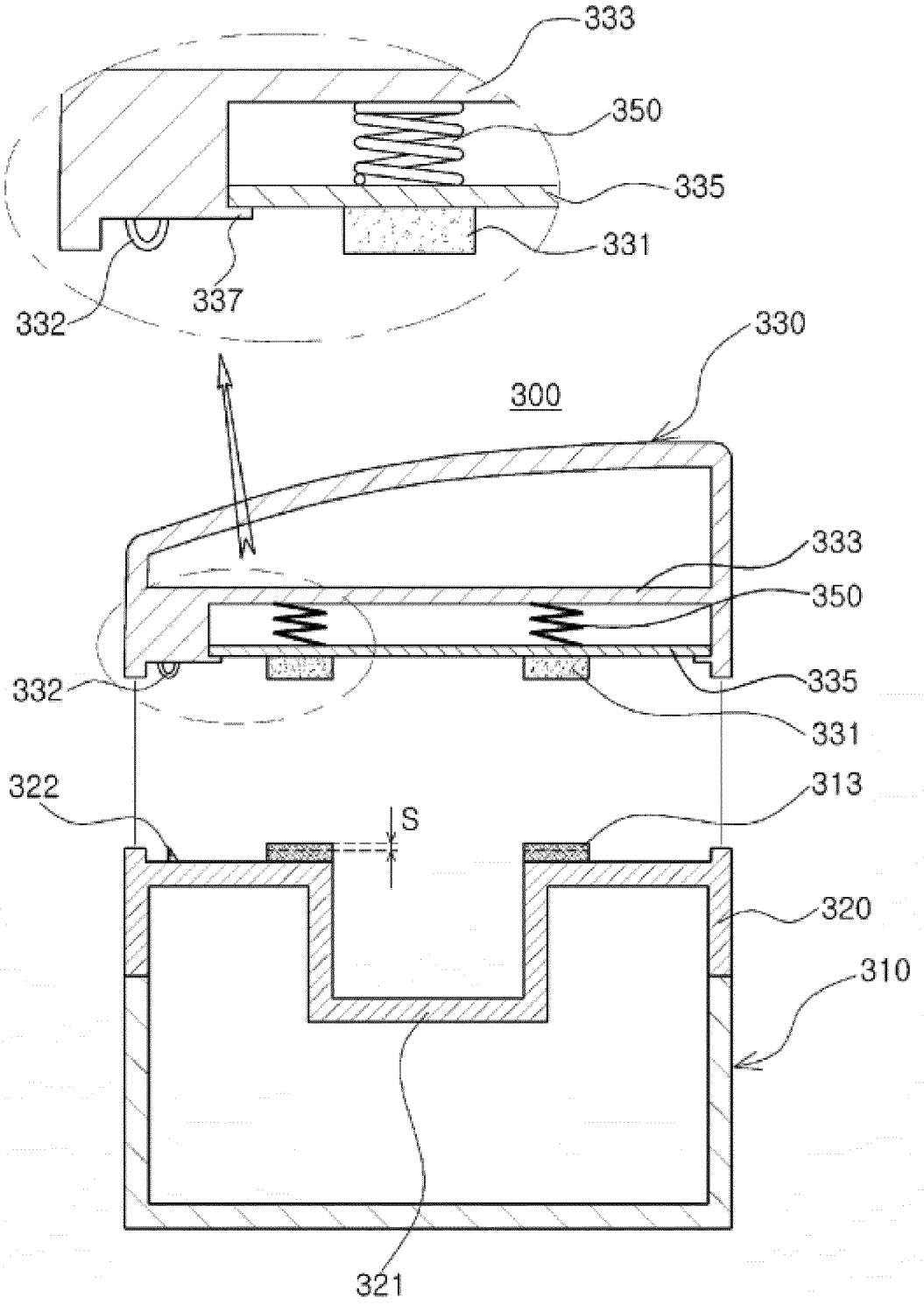
333
350
335
331
337
332
330
300
333
350
332
335
331
322
313
S
320
310
321

【Figure 12】

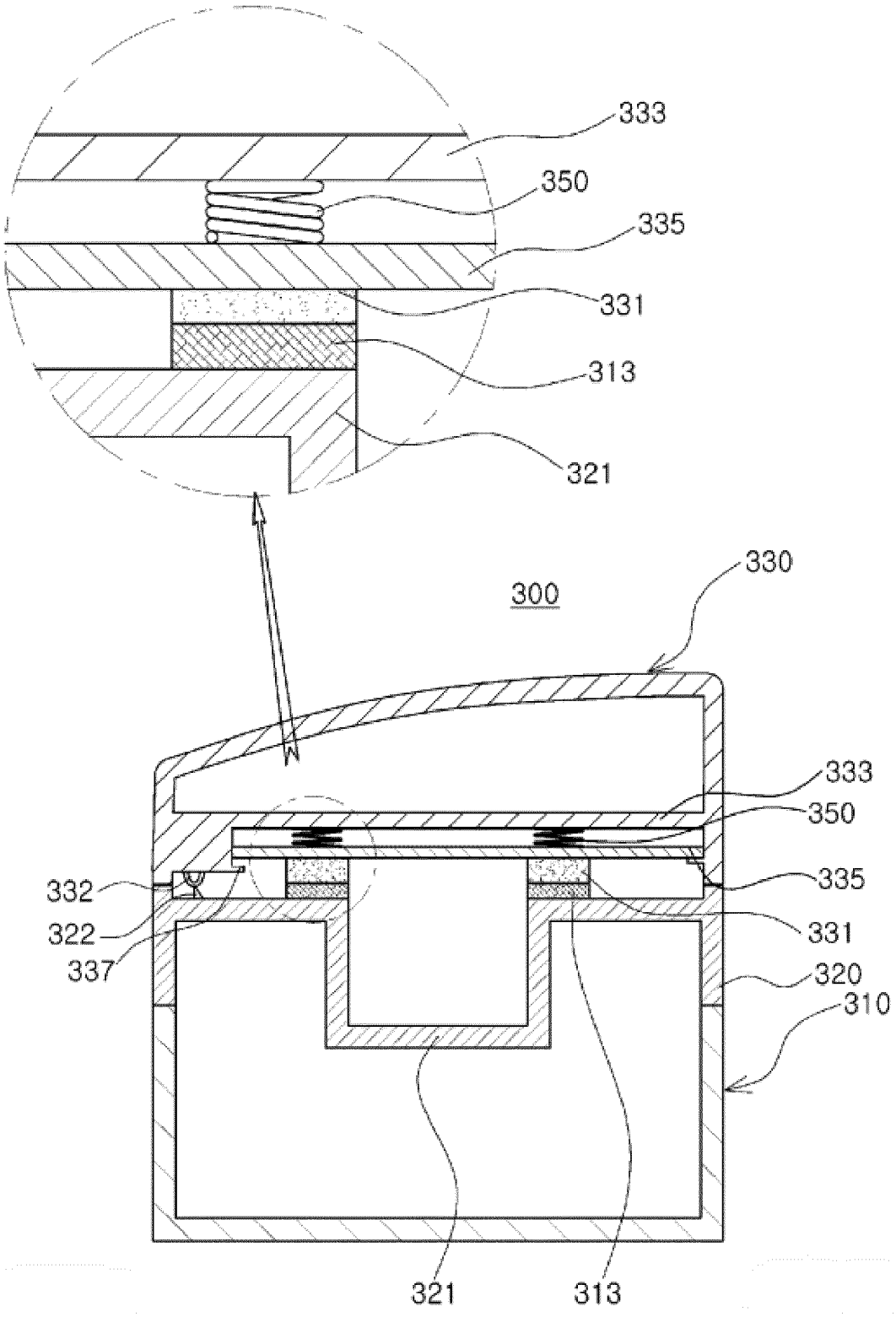
333
350
335
331
313
321
300
330
333
350
332
335
322
331
337
320
310
321
313

【Figure 13】

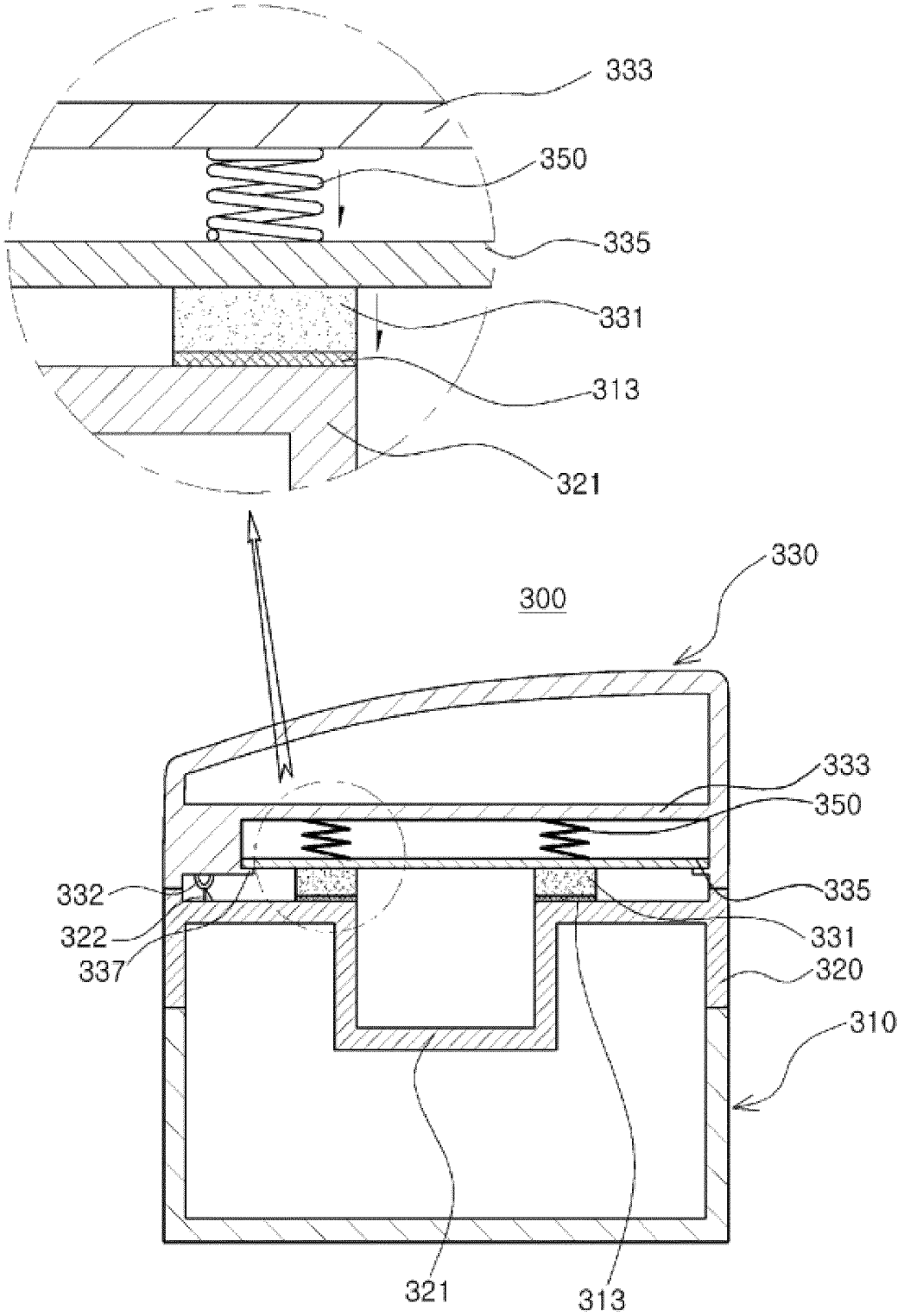
333
350
335
331
313
321
330
300
333
350
332
335
322
331
337
320
310
321
313

【Figure 14】

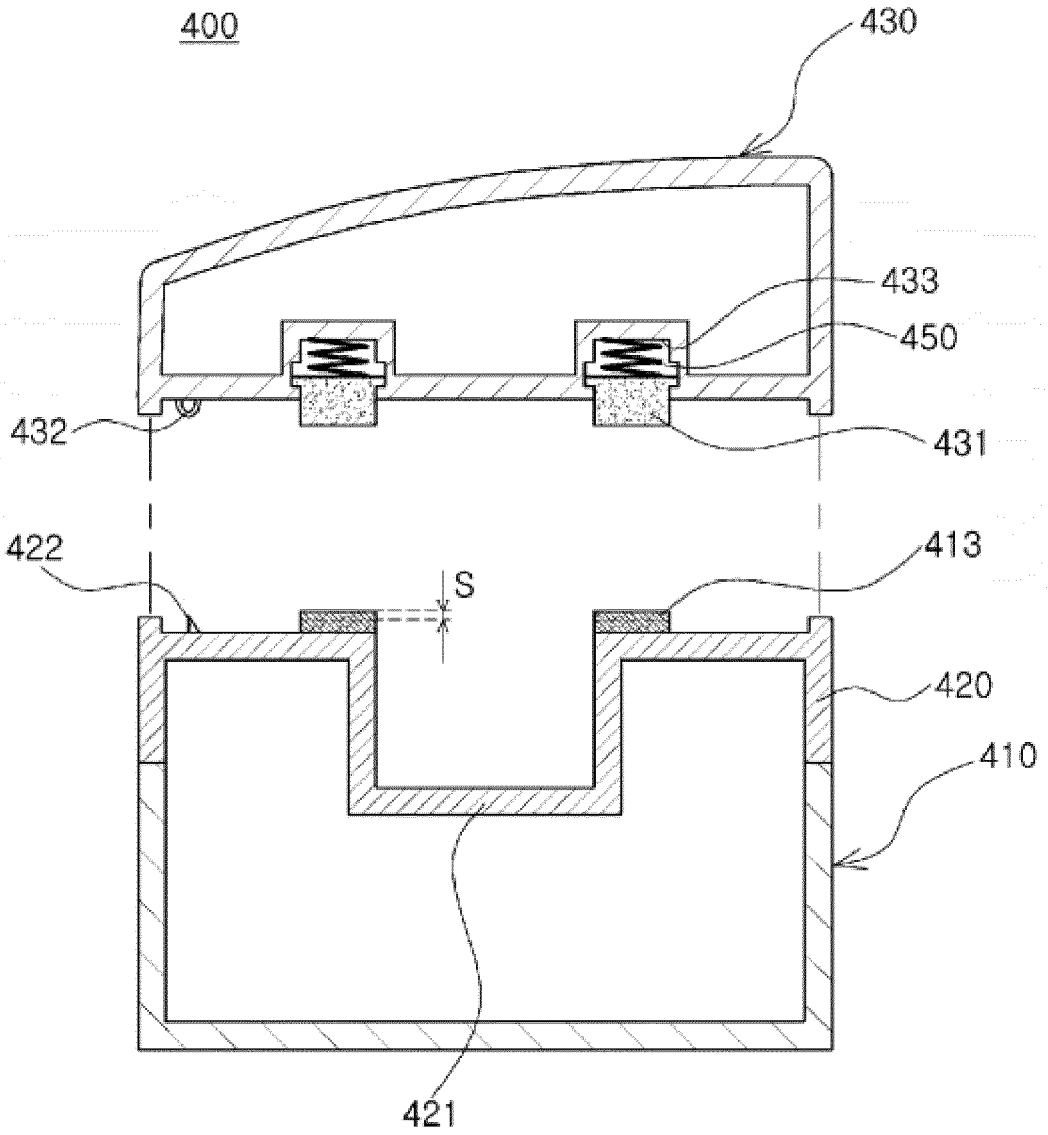

【Figure 15】

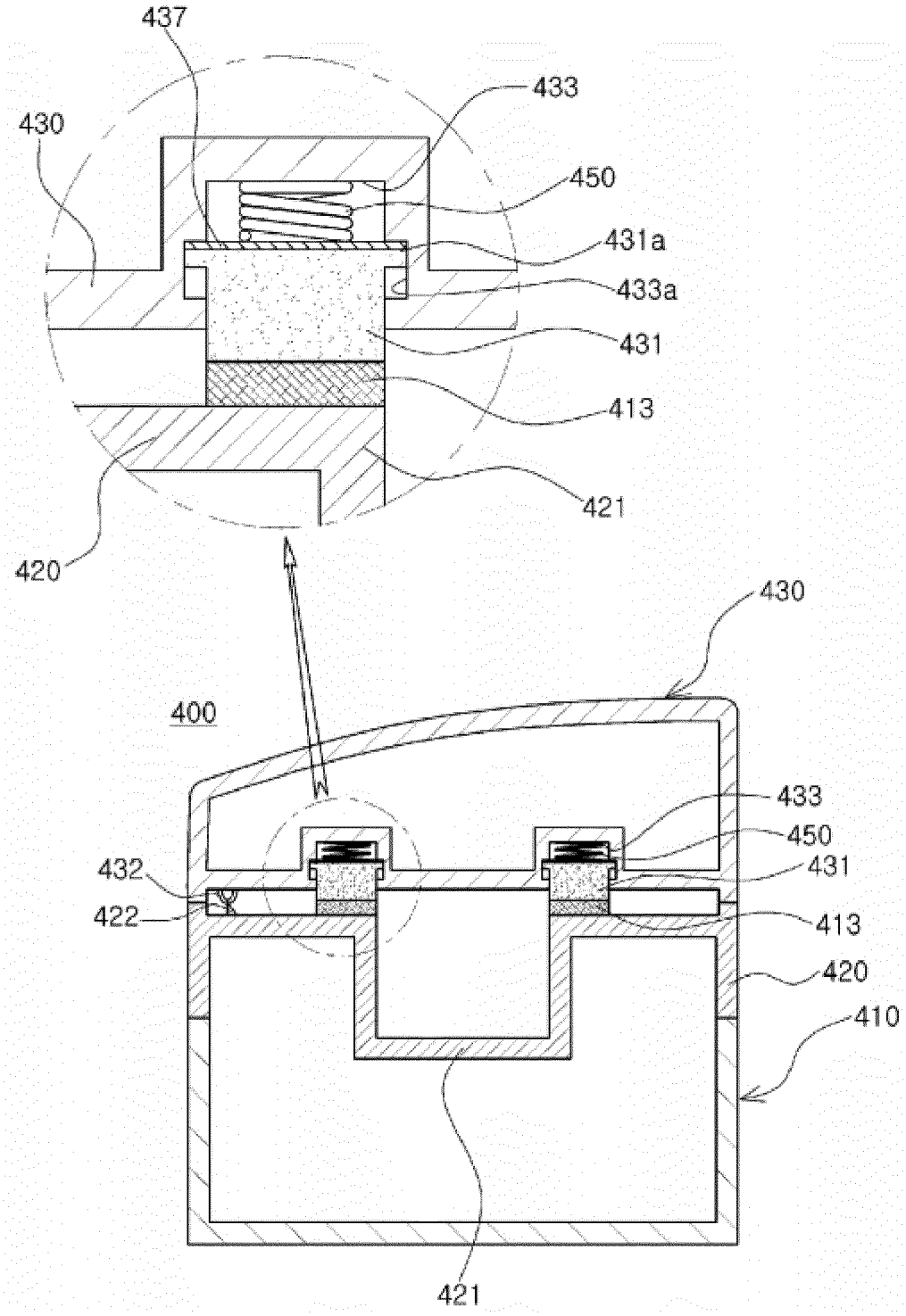
437
433
430
450
431a
433a
431
413
421
420
430
400
433
450
431
432
422
413
420
410
421

【Figure 16】

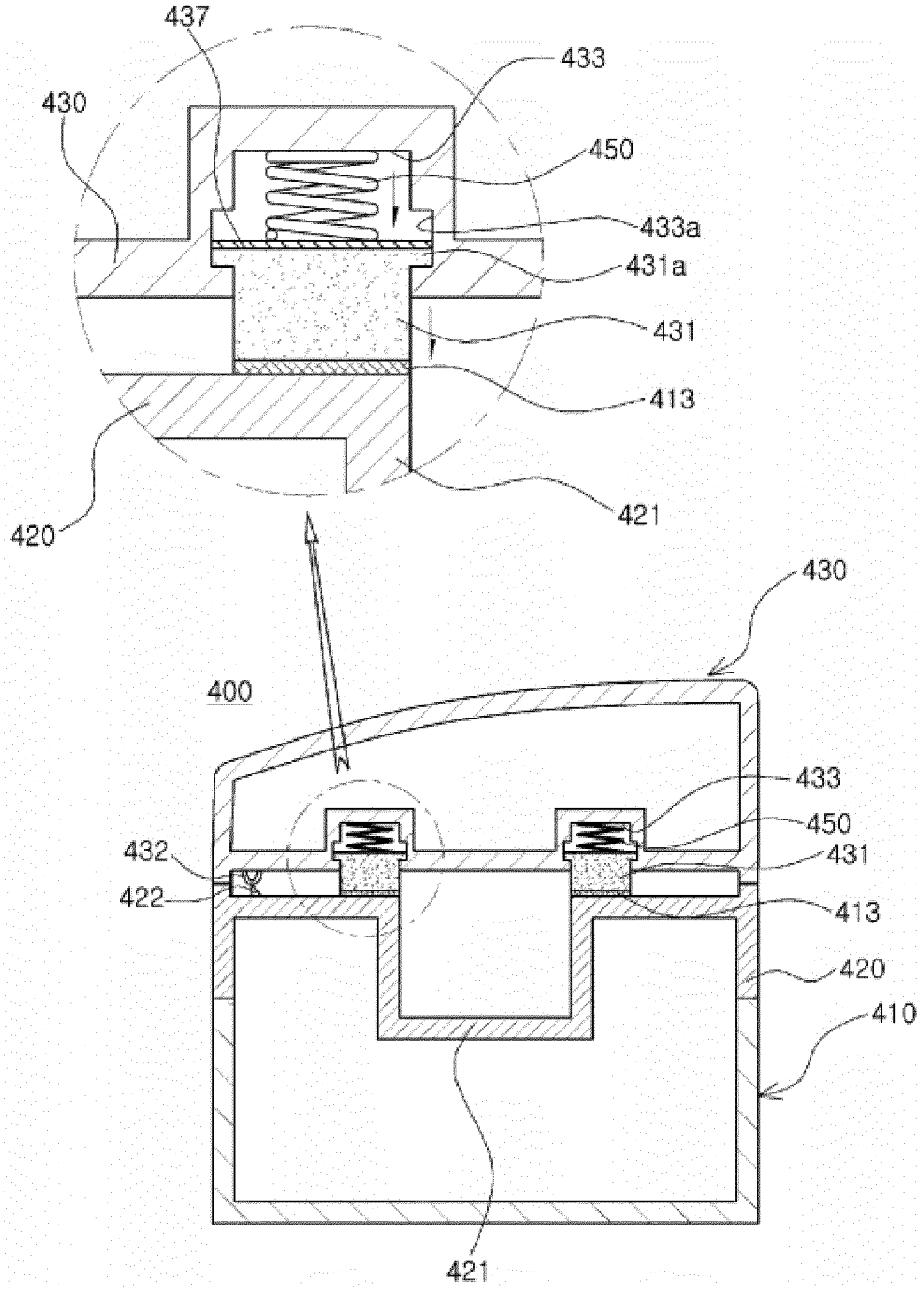
437
433
430
450
433a
431a
431
413
420
421
430
400
433
450
432
431
422
413
420
410
421

【Figure 17】

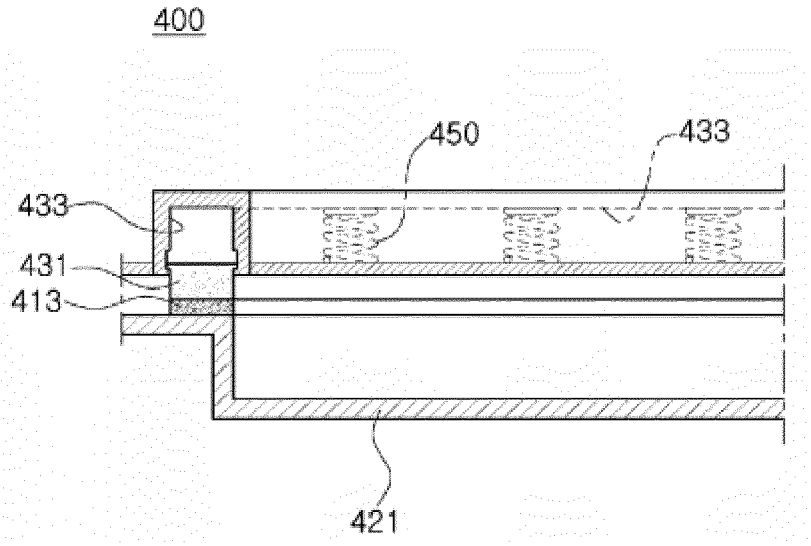

【Figure 18】

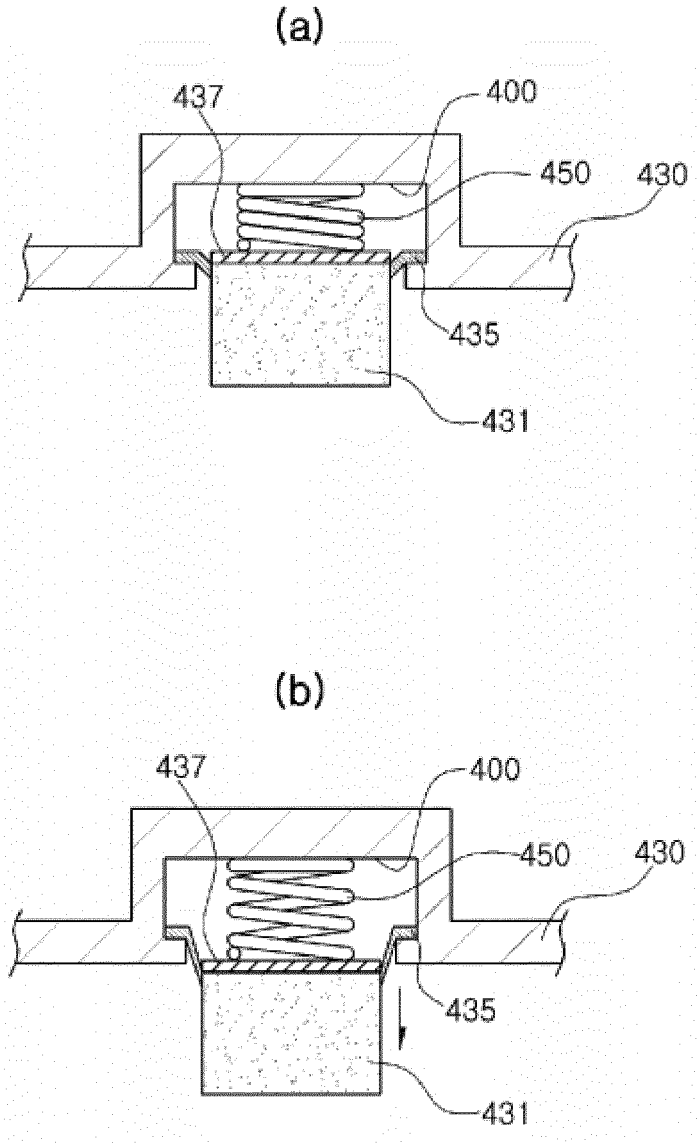

REFERENCES CITED IN THE DESCRIPTION

This list of references cited by the applicant is for the reader's convenience only. It does not form part of the European patent document. Even though great care has been taken in compiling the references, errors or omissions cannot be excluded and the EPO disclaims all liability in this regard.

Patent documents cited in the description

- KR 200319700 **[0003]**