(19) Europäisches Patentamt
European Patent Office
Office européen des brevets

(11) EP 2 998 257 B1

(12) **EUROPEAN PATENT SPECIFICATION**

(45) Date of publication and mention of the grant of the patent:
05.04.2017 Bulletin 2017/14

(21) Application number: **15193388.4**

(22) Date of filing: **25.06.2013**

(51) Int Cl.:
B65H 54/28 *(2006.01)* ***B65H 54/71*** *(2006.01)*
B65H 57/22 *(2006.01)* ***B65H 59/40*** *(2006.01)*
B65H 63/06 *(2006.01)* ***B65H 54/38*** *(2006.01)*

(54) **YARN MONITORING DEVICE AND YARN WINDING MACHINE**

GARNÜBERWACHUNGSVORRICHTUNG UND GARNWICKELMASCHINE

DISPOSITIF DE SURVEILLANCE DE FIL ET MACHINE DE BOBINAGE DE FIL

(84) Designated Contracting States:
AL AT BE BG CH CY CZ DE DK EE ES FI FR GB GR HR HU IE IS IT LI LT LU LV MC MK MT NL NO PL PT RO RS SE SI SK SM TR

(30) Priority: **18.07.2012 JP 2012160031**

(43) Date of publication of application:
23.03.2016 Bulletin 2016/12

(62) Document number(s) of the earlier application(s) in accordance with Art. 76 EPC:
13173588.8 / 2 687 469

(73) Proprietor: **Murata Machinery, Ltd.**
Kyoto-shi, Kyoto 601-8326 (JP)

(72) Inventors:
- **FUKUHARA, Shuichi**
  Kyoto, 612-8686 (JP)
- **SONE, Yoshifuto**
  Kyoto, 612-8686 (JP)
- **NAKADE, Kazuhiko**
  Kyoto, 612-8686 (JP)
- **KAWAMOTO, Kenji**
  Kyoto, 612-8686 (JP)

(74) Representative: **Stöckeler, Ferdinand et al**
Schoppe, Zimmermann, Stöckeler
Zinkler, Schenk & Partner mbB
Patentanwälte
Radlkoferstrasse 2
81373 München (DE)

(56) References cited:
EP-A1- 1 260 476 **EP-A2- 2 072 440**
EP-A2- 2 423 144 **DE-A1- 4 025 696**
DE-A1-102004 052 564 **US-A- 4 292 868**

Note: Within nine months of the publication of the mention of the grant of the European patent in the European Patent Bulletin, any person may give notice to the European Patent Office of opposition to that patent, in accordance with the Implementing Regulations. Notice of opposition shall not be deemed to have been filed until the opposition fee has been paid. (Art. 99(1) European Patent Convention).

Printed by Jouve, 75001 PARIS (FR)

Description

BACKGROUND OF THE INVENTION

1. Field of the Invention

[0001] The present invention relates to a yarn monitoring device that monitors a yarn running in a yarn winding machine.

2. Description of the Related Art

[0002] A yarn monitoring device that is arranged in a yarn winding machine such as an automatic winder or a spinning machine and that monitors a thickness of a running yarn is known in the art. One such yarn monitoring device is disclosed in Japanese Patent Application Laid-open No. 2009-190841.

[0003] According to the above document, a yarn clearer that functions as the yarn monitoring device is arranged in an automatic winder that unwinds a yarn from a supply bobbin and winds the yarn around a winding bobbin while traversing the yarn to form a package. The automatic winder includes a winding drum that traverses the yarn and also drives the winding bobbin.

[0004] The yarn clearer disclosed in the above document includes a clearer head and an analyzer. The clearer head includes a yarn irregularity sensor that detects a thickness of the yarn. The analyzer processes signals generated in the yarn irregularity sensor to detect a yarn defect. A rotation sensor is attached to the winding drum. The rotation sensor detects rotation of the winding drum and sends information pertaining to a running speed of the yarn to the analyzer. The automatic winder also includes a cutter that cuts the yarn immediately upon detection of a yarn defect by the yarn clearer.

[0005] EP 1 260 476 A1 teaches a yarn clearer, in which several parameters of the yarn are measured, such as the yarn thickness and the yarn hairiness.

[0006] US 4 292 868 A discloses a textile spooling machine comprising a thread tension sensor and yarn cleaning apparatus. A cutter is controlled based on the outputs of the tread tension sensor and the yarn cleaning device.

[0007] DE 40 25 696 A1 teaches a winding device comprising a measuring device for detecting irregularities of a yarn. Two yarn detection sensors are provided to detect yarn in end regions of a cheese. A cutter is controlled to cut the yarn a predetermined period after it was detected by one of the yarn sensors.

SUMMARY OF THE INVENTION

[0008] In the automatic winder in Japanese Patent Application Laid-open No. 2009-190841, the yarn is simply cut at the time of detection of a yarn defect by the yarn irregularity sensor. The inventors recognized, however, in this kind of control, depending on a traversing position of the yarn when the yarn is cut, stitching (yarn end missing) in which the yarn overshoots a winding width of the package can occur, resulting in a defective package.

[0009] It is an object of the present invention to provide a yarn monitoring device in which such problems can be prevented.

[0010] The invention provides a yarn monitoring device according to claim 1.

[0011] The inventors recognized that such problems can be prevented by a yarn monitoring device that can perform determination and control functions in real-time not based solely on the thickness of the yarn but also based on various kinds of other information.

[0012] A yarn monitoring device according to an aspect of the present invention includes a sensor and a determining section. The sensor monitors a yarn that is being wound by a yarn winding machine. The determining section performs a determination based on first information acquired from the sensor and second information acquired from a status acquiring section of the yarn winding machine, and outputs a control signal based on the determination. The second information acquired by the determining section includes at least one of a position of an unwinding assisting member in an unwinding assisting device arranged in the yarn winding machine, and hairiness of the yarn. A cutter is adapted to cut the yarn, wherein the determining section is adapted to output as the control signal a signal that causes the cutter to operate and cut the yarn. The first information indicates a thickness of the yarn, wherein the determining section is adapted to output the control signal when the first information indicates a yarn defect. A thickness threshold value for detecting a yarn defect is varied based on the second information.

[0013] According to another aspect of the present invention, a yarn winding machine preferably includes the above yarn monitoring device and a winding section that winds the yarn, which has been monitored by the yarn monitoring device, to form a package.

BRIEF DESCRIPTION OF THE DRAWINGS

[0014]

FIG. 1 is a front elevational view showing an overall structure of an automatic winder according to an embodiment of the present invention;
FIG. 2 is a front elevational view of a winder unit;
FIG. 3 is a perspective view of a tension sensor; and
FIG. 4 is a functional block diagram of an electric structure of the winder unit.

DETAILED DESCRIPTION

[0015] Exemplary embodiments of the present invention are explained in detail below with reference to the accompanying drawings. As shown in FIG. 1, an automatic winder (yarn winding machine) 1 according to an embodiment of the present invention includes a plurality

of winder units (yarn winding units) 10 that are arranged side by side, and a machine controller 11 that is arranged at one end in the alignment direction of the winder units 10.

[0016] The machine controller 11 includes a display device 12, a command input section 13 and the like. The display device 12 displays information pertaining to the winder units 10. The command input section 13 is used by an operator to input various commands to the machine controller 11. The operator of the automatic winder 1 can check various kinds of information displayed on the display device 12, and can also collectively manage the winder units 10 via the machine controller 11 and suitably operate the command input section 13.

[0017] Each of the winder units 10 unwinds a yarn 21 from a supply bobbin 20 and winds the yarn 21 around a winding bobbin 22. The winding bobbin 22 with the yarn 21 wound around it is called a package 23. The terms 'upstream side' and 'downstream side' used in the following explanation refer to the upstream side and the downstream side, respectively, in a running direction of the yarn 21.

[0018] As shown in FIG. 2, the winder unit 10 includes a main frame 24, a yarn supplying section 25, and a winding section 26.

[0019] The main frame 24 is arranged on a side of the winder unit 10. Most of the components of the winder unit 10 are directly or indirectly supported by the main frame 24.

[0020] The yarn supplying section 25 holds the supply bobbin 20, which supplies the yarn 21, substantially upright. The winding section 26 includes a cradle 28 and a winding drum 29.

[0021] The cradle 28 rotatably supports the winding bobbin 22. The cradle 28 can support the winding bobbin 22 in such a manner as to bring an outer peripheral surface of the winding bobbin 22 into contact with an outer peripheral surface of the winding drum 29. The winding drum 29 is arranged opposed to the winding bobbin 22 and is driven to rotate by a drum driving motor 53.

[0022] A spiral traverse groove 27 is formed on the outer peripheral surface of the winding drum 29. The yarn 21 to be wound around the winding bobbin 22 is traversed along the traverse groove 27. The winding drum 29 is coupled to an output shaft of the drum driving motor 53 and is driven to rotate by the drum driving motor 53. The winding drum 29 is driven to rotate with the yarn 21 guided into the traverse groove 27. Accordingly, the package 23 that is in contact with the winding drum 29 is also rotated, causing the yarn 21 to be wound around the outer peripheral surface of the package 23 while being traversed. Yarn layers are formed on the surface of the package 23 in this manner.

[0023] A drum rotation detection sensor 73 is arranged near the winding drum 29. The drum rotation detection sensor 73 is electrically connected to a unit controller 30 that controls various components of the winder unit 10. The drum rotation detection sensor 73, for example, is a rotary encoder, and outputs a rotation pulse signal (hereinafter, also "drum pulse signal") to the unit controller 30 per predetermined angular rotation of the winding drum 29. The unit controller 30 counts the number of pulses per predetermined length of time to acquire the rotation speed of the winding drum 29 (and thereby calculates the running speed of the yarn 21).

[0024] The winding bobbin 22 is rotated in accordance with the winding drum 29 that is driven to rotate while the outer peripheral surface of the winding bobbin 22 is in contact with the winding drum 29. With this structure, the yarn 21 that is unwound from the supply bobbin 20 is wound around the winding bobbin 22 while being traversed along the traverse groove 27. The structure for traversing the yarn 21 is not limited to the winding drum 29. For example, an arm-like traverse device that has a traverse guide for traversing the yarn 21 to and fro by a predetermined traverse width can be used as the structure for traversing.

[0025] One unit controller 30 is arranged corresponding to every winder unit 10. The unit controller 30 includes hardware such as a central processing unit (CPU), a read-only memory (ROM), and a random access memory (RAM), and software such as control computer programs stored in the RAM. The hardware and the software work in conjunction to control the components of the winder unit 10. The unit controller 30 of the winder unit 10 is capable of communicating with the machine controller 11. This arrangement allows the machine controller 11 to centrally manage operations of the winder units 10.

[0026] In a yarn running path between the yarn supplying section 25 and the winding section 26 in the winder unit 10, an unwinding assisting device 31, a tension applying device 32, a tension sensor 60, a yarn joining device 33, and a yarn monitoring device 34 are arranged in the mentioned order from the upstream side.

[0027] The unwinding assisting device 31 includes a regulating member 35 that comes into contact with a bulging portion (balloon) formed by the swaying of the yarn 21 unwound from the supply bobbin 20 by centrifugal force. By coming into contact with the balloon, the regulating member 35 suppresses the swaying of the yarn 21 and maintains the size of the balloon to a predetermined size. In this manner, the yarn 21 can be unwound from the supply bobbin 20 under a constant tension. The structure of the unwinding assisting device 31 will be explained in detail later.

[0028] The tension applying device 32 applies a predetermined tension to the running yarn 21. The tension applying device 32 according to the present embodiment is a gate-type one with movable comb teeth arranged against fixed comb teeth. An appropriate tension is applied to the yarn 21 when the yarn 21 passes between the two sets of comb teeth that are engaged with each other. Instead of the gate-type tension applying device 32, a disc-type tension applying device can also be used.

[0029] A load cell-type sensor is adopted as the tension sensor 60. The tension sensor 60 measures the tension

on the yarn 21 running along a yarn path, and outputs an electric signal corresponding to the measured tension. The structure of the tension sensor 60 will be explained in detail later.

[0030] The yarn joining device 33 joins a lower yarn from the supply bobbin 20 and an upper yarn from the package 23 when the yarn 21 between the supply bobbin 20 and the package 23 is cut for any reason. In the present embodiment, a splicer that twists together the yarn ends by swirling air currents produced by compressed air is adopted as the yarn joining device 33. However, the yarn joining device 33 need not be limited to a splicer but can also be, for example, a mechanical knotter.

[0031] A lower yarn catching member 54 that catches and guides the yarn from the supply bobbin 20 (lower yarn) is arranged below the yarn joining device 33 in a height direction of the winder unit 10. An upper yarn catching member 55 that catches and guides the yarn from the package 23 (upper yarn) is arranged above the yarn joining device 33. The lower yarn catching member 54 includes a lower yarn catching pipe 56 that is coupled to a not-shown negative pressure source and a suction vent 57 at the tip portion. The upper yarn catching member 55 includes an upper yarn catching pipe 58 that is coupled to a not-shown negative pressure source and a suction mouth 59 at the tip portion. Because of this structure, suction currents can be produced at the suction vent 57 and the suction mouth 59. Both the lower yarn catching pipe 56 and the upper yarn catching pipe 58 are rotatably supported at their base portions in such a manner as to turn upward and downward.

[0032] When the yarn 21 is disconnected between the supply bobbin 20 and the package 23, the lower yarn catching member 54 catches the lower yarn from the supply bobbin 20 and guides it to the yarn joining device 33, and the upper yarn catching member 55 catches the upper yarn from the package 23 and guides it to the yarn joining device 33. When the yarn joining device 33 is driven in this state, the lower yarn and the upper yarn are joined together, and the yarn 21 between the supply bobbin 20 and the package 23 attains continuity. The winding of the yarn 21 to form the package 23 can thereby be resumed.

[0033] The yarn monitoring device 34 monitors the quality of the running yarn 21 by a yarn irregularity sensor 37. The yarn irregularity sensor 37 is an optical sensor that includes a light source and a light receiving element, which are not shown, and detects defects (portions of the yarn 21 having a defect) in the yarn 21. A cutter 39 is arranged near the yarn monitoring device 34. The cutter 39 cuts the yarn 21 when a yarn defect is detected by the yarn monitoring device 34. The cutter 39 includes a cutting blade and a solenoid, which are not shown. When an electric current flows through the solenoid, the cutting blade is driven to cut the yarn 21.

[0034] The unwinding assisting device 31 is explained in detail below. The regulating member 35 arranged in the unwinding assisting device 31 includes a fixed tube 41 and a movable tube (unwinding assisting member) 42. The fixed tube 41, which is fixed to the main frame 24, comes into contact with the balloon of the yarn 21. The movable tube 42, on the other hand, moves as the yarn 21 is unwound from the supply bobbin 20, and comes into contact with the balloon of the yarn 21. Both the fixed tube 41 and the movable tube 42 are circular tubes having at least a shaft through-hole in a vertical direction.

[0035] An inverted U-shaped support arm 43 is fixed to the movable tube 42. A chase portion detection sensor 44 that detects a chase portion of the supply bobbin 20 is attached to the support arm 43. The chase portion is a yarn layer edge portion of the supply bobbin 20 the position of which moves as the winding operation proceeds. The chase portion detection sensor 44 is an optical sensor having a light emitter and a light receiver that are arranged facing each other on either side of the supply bobbin 20.

[0036] The unwinding assisting device 31 includes a lifting and lowering mechanism 45 that lifts or lowers the movable tube 42. The lifting and lowering mechanism 45 includes a screw member 46 arranged in a vertical direction, a lifting and lowering guide member 47 that is arranged parallel to the screw member 46, and a slider 48 that is guided by the lifting and lowering guide member 47.

[0037] The screw member 46 is rotatably supported. The slider 48 is screw thread-coupled to the screw member 46. The movable tube 42 is fixed to the slider 48 via the support arm 43. The lifting and lowering mechanism 45 includes a lifting and lowering motor 50 that drives the screw member 46 to rotate. An output shaft of the lifting and lowering motor 50 is coupled to the screw member 46 by a belt member. A stepping motor, for example, can be used as the lifting and lowering motor 50.

[0038] When the lifting and lowering motor 50 rotates in the normal direction or the reverse direction, the screw member 46 rotates about the shaft, and lifts or lowers the movable tube 42 along with the slider 48.

[0039] The unwinding assisting device 31 includes an unwinding assisting controller 51 that controls the unwinding assisting device 31. The unwinding assisting controller 51 includes a drive board that drives the lifting and lowering motor 50, a power source, and a communication controller for performing digital communication between the yarn monitoring device 34 and the unit controller 30. The unwinding assisting controller 51 and the lifting and lowering motor 50 are electrically connected to each other via a not-shown wiring. The unwinding assisting controller 51 and the chase portion detection sensor 44 are electrically connected to each other via a not-shown wiring.

[0040] The unwinding assisting device 31 having the above structure assists in the unwinding of the yarn 21 from the supply bobbin 20. Specifically, when the yarn 21 is unwound from the supply bobbin 20, the yarn layers

are gradually removed, and the height of the chase portion of the supply bobbin 20 is gradually lowered. When detecting that the height of the chase portion is being lowered, the chase portion detection sensor 44 outputs a detection signal to the unwinding assisting controller 51. Upon receiving the detection signal, the unwinding assisting controller 51 drives the lifting and lowering motor 50 of the lifting and lowering mechanism 45 to cause the slider 48 to descend so that the movable tube 42 descends in accordance with the change in the height of the chase portion. The descent of the slider 48 with the change in the height of the chase portion is repeated until an amount of the yarn 21 wound on the supply bobbin 20 is reduced to approximately one-third the initial full amount.

[0041] Thus, the height of the movable tube 42 (and also the chase portion detection sensor 44) is raised or lowered by the lifting and lowering motor 50 that is a stepping motor. Accordingly, the unwinding assisting controller 51 that controls the lifting and lowering motor 50 can acquire the height of the movable tube 42 (and of the chase portion detection sensor 44) based on the details of the control performed by the unwinding assisting controller 51 itself. The unwinding assisting controller 51 is electrically connected to the unit controller 30 to send and receive signals. The unwinding assisting controller 51 is also electrically connected to the yarn monitoring device 34 to output the signals to the yarn monitoring device 34. The unwinding assisting controller 51 therefore outputs the acquired height of the movable tube 42 to the unit controller 30 and also to the yarn monitoring device 34.

[0042] The structure of the tension sensor 60 is explained in detail below. As shown in FIG. 3, the tension sensor 60 includes a deformable member 61 that is made of a metal and is substantially U-shaped. One end of the deformable member 61 is fixed to the winder unit 10. A small pulley-like contact guide 62 is rotatably supported on the other end of the deformable member 61. The deformable member 61 includes a load cell portion 63. On the surface of the load cell portion 63, a strain gauge 64 is arranged, for example, by printing. The strain gauge 64 is electrically connected to the unit controller 30 and the yarn monitoring device 34 via a not-shown wiring.

[0043] When the yarn 21 runs guided on the track so as to be pressed against the contact guide 62, the deformable member 61 deforms so that strain occurs in the load cell portion 63 in accordance with the tension on the yarn 21. The strain gauge 64 outputs an electric signal corresponding to this strain. In this manner, the tension sensor 60 can detect the tension on the yarn 21.

[0044] A yarn guide 70 that guides the yarn 21 that is traversed by the winding drum 29 is explained below. As shown in FIG. 2, the yarn guide 70 is a trapezoidal metal plate that encompasses the track of the traversed yarn 21.

[0045] A yarn detection sensor 71 is attached to an appropriate position on the yarn guide 70. The yarn detection sensor 71 is an optical sensor with a light emitter and a light receiver, and detects the presence/absence of the yarn 21 in a detection area of the yarn detection sensor 71. The position of the yarn detection sensor 71 is shifted toward one side of the yarn guide relative to the center of a stroke of the yarn 21 traversed along the traverse groove 27 (traverse stroke).

[0046] As shown in FIG. 4, the yarn detection sensor 71 is electrically connected to the unit controller 30 and the yarn monitoring device 34 via a not-shown wiring. The unit controller 30 can determine whether traversing of the yarn 21 is normally performed, or more specifically, whether the yarn 21 is detected at every predetermined traverse cycle, based on the detection signal output by the yarn detection sensor 71. When a yarn defect is detected, a later-explained yarn monitoring controller 81 arranged in the yarn monitoring device 34 determines and controls a timing of cutting the yarn 21 in relation to the traversing of the yarn 21, based on the detection signal of the yarn detection sensor 71.

[0047] An electrical structure of the yarn monitoring device 34 is explained next. As shown in FIG. 4, the yarn monitoring controller (determining section) 81 arranged in the yarn monitoring device 34 includes hardware such as a CPU that functions as a calculating unit and a ROM and a RAM that function as storage sections, and software such as control programs stored in the RAM. The hardware and the software work in conjunction such that the yarn monitoring controller 81 controls the yarn monitoring device 34.

[0048] The yarn irregularity sensor 37 is electrically connected to the yarn monitoring controller 81. A yarn thickness irregularity signal (first information) output by the yarn irregularity sensor 37 is input into the yarn monitoring controller 81. The cutter 39 (specifically, the solenoid that drives the cutting blade) is electrically connected to the yarn monitoring controller 81. The cutter 39 is operated to cut the yarn 21 upon receiving a cutter operation signal (control signal) output by the yarn monitoring controller 81.

[0049] To receive signals from outside, the yarn monitoring device 34 includes a drum pulse receiving section 82, a yarn detection receiving section 83 (binary receiving section), a tension receiving section (analog value receiving section) 84, and a movable tube height receiving section (communication receiving section) 85. The drum pulse signals output by the drum rotation detection sensor 73 are input into the yarn monitoring device 34 via the drum pulse receiving section 82. Yarn detection signals output by the yarn detection sensor 71 are input into the yarn monitoring device 34 via the yarn detection receiving section 83. Tension signals output by the strain gauge 64 are input into the yarn monitoring device 34 via the tension receiving section 84. Movable tube height signals output by the unwinding assisting controller 51 are input into the yarn monitoring device 34 via the movable tube height receiving section 85. All the above information is directly input into the yarn monitoring device

34 from their respective sources (the drum rotation detection sensor 73, the yarn detection sensor 71, the strain gauge 64, and the unwinding assisting controller 51), and stored in the storage section such as the RAM to be used in the determination and control function performed by the yarn monitoring controller 81. Furthermore, all the above information is also input into the unit controller 30 to be used in the control function performed by the unit controller 30. Among the above information, the information acquired from the yarn detection sensor 71, the strain gauge 64, and the unwinding assisting controller 51 correspond to second information of the present invention.

[0050] The drum pulse receiving section 82 and the yarn detection receiving section 83 acquire information pertaining to the presence/absence of the pulse or the presence/absence of the yarn 21 as a binary value. The tension receiving section 84 acquires the tension on the yarn 21 as an analog value. The movable tube height receiving section 85 acquires the height of the movable tube 42 through digital communication with the unwinding assisting controller 51.

[0051] With the increasing need for high-speed winding by the automatic winder 1, there is a requirement for accurate determination and control functions by the yarn monitoring device 34 even at such high winding speed. Because, as explained above, the information from different components are directly input into the yarn monitoring device 34 (without passing through the unit controller 30 and such-like), the time lag of the signals can be minimized, and a significantly enhanced real-time processing can be achieved.

[0052] Control functions performed by the yarn monitoring device 34 according to the present embodiment are explained below. The yarn monitoring controller 81 performs three control functions to realize high performance by the yarn monitoring device 34 and high quality of the package 23.

[0053] The first control function performed by the yarn monitoring controller 81 is a timing control of yarn cutting upon detection of a yarn defect. The yarn monitoring controller 81 of the yarn monitoring device 34 monitors whether the yarn 21 has a defect while the winder unit 10 is driving the winding drum 29 to wind the yarn 21. For determining the presence/absence of a yarn defect, the signal output by the yarn irregularity sensor 37 and the drum pulse signal input from the drum rotation detection sensor 73 are used. Based on these signals, an extent of variation in the thickness of the yarn 21 and a length of the irregular portion of the yarn 21 are assessed.

[0054] When the yarn monitoring controller 81 monitors the presence/absence of a yarn defect and finds a yarn defect, the yarn monitoring controller 81 does not operate the cutter 39 immediately upon detecting the yarn defect. Instead, the yarn monitoring controller 81 operates the cutter 39 at a predetermined timing when a traverse position of the yarn 21 is about to return to the traverse center from a traverse edge. Specifically, in the yarn guide 70, the yarn 21 crosses the detection area of the yarn detection sensor 71 when the yarn path is heading toward one traverse edge from the traverse center, and again crosses the detection area of the yarn detection sensor 71 after the yarn path reverses at the traverse edge and heads toward the traverse center. Accordingly, in one traverse stroke, the yarn detection sensor 71 outputs two yarn detection signals. Upon receiving the second yarn detection signal, the yarn monitoring controller 81 outputs the cutter operation signal to operate the cutter 39 to cut the yarn 21.

[0055] In this manner, the yarn 21 is cut by the cutter 39 by aiming at a predetermined timing when the yarn path is heading toward the traverse center from a traverse edge in a traverse stroke. Accordingly, yarn end missing, in which the yarn 21 moves out and overshoots the winding width of the package 23 due to the momentum caused by the cutting, can be prevented. Because the yarn detection signal output by the yarn detection sensor 71 is directly input into the yarn monitoring device 34 (yarn monitoring controller 81) as explained above, even if the yarn 21 is being traversed at high speed, the yarn 21 still can be cut at the accurate timing, thereby reliably preventing the yarn end missing.

[0056] The second control function performed by the yarn monitoring controller 81 pertains to control of detection of an error in the thickness of the yarn 21. The yarn monitoring controller 81 detects the error when the yarn 21 wound around the supply bobbin 20 that is set in the yarn supplying section 25 is of an unintended thickness (having a different yarn count than normal). The yarn monitoring controller 81 monitors the thickness of the yarn 21 detected by the yarn irregularity sensor 37 and also monitors the tension signal received from the strain gauge 64 of the tension sensor 60. If the tension on the yarn 21 and the thickness of the yarn 21 meet any of the conditions (1) to (3) described below, the yarn monitoring controller 81 outputs the cutter operation signal to operate the cutter 39 to cut the yarn 21. The yarn monitoring controller 81 also outputs a winding suspension signal to the unit controller 30 to suspend the winding operation and displays an appropriate warning. Accordingly, in this control function, the cutter operation signal and the winding suspension signal correspond to the control signals output by the yarn monitoring controller 81.

[0057] The yarn monitoring controller 81 detects that the yarn 21 (supply bobbin 20) has an unintended thickness under the following conditions: (1) when a detected tension on the yarn 21 is below a predetermined threshold value; (2) when the thickness of the yarn 21 is detected to be thinner than a predetermined threshold value even though the detected tension on the yarn 21 is normal; and (3) when the thickness of the yarn 21 is detected to be not thinner than the predetermined threshold value even though the detected tension on the yarn 21 is greater than the predetermined threshold value. When the detected tension on the yarn 21 is greater than the threshold value, the yarn 21 tends to be thin. When the detected tension on the yarn 21 is smaller than the threshold value,

the yarn 21 tends to be thick.

[0058] In this manner, even if a supply bobbin 20 of an unintended yarn count is supplied to the yarn supplying section 25 due to some reason, an error can be detected in early stages, and the winding operation can be suspended. Furthermore, because the tension signal output by the tension sensor 60 is directly input into the yarn monitoring device 34, there is almost no time lag. Accordingly, the tension on the yarn 21 and the thickness of the yarn 21 that vary in extremely narrow time intervals can be precisely correlated, and thereby the supply bobbin 20 of a yarn count that is different than the expected yarn count can be accurately detected.

[0059] The third control function performed by the yarn monitoring controller 81 pertains to detection of a yarn defect with respect to hairiness of the yarn 21. As is commonly known, when the yarn 21 is unwound from the supply bobbin 20, as the amount of the yarn 21 remaining on the supply bobbin 20 decreases, the hairiness of the yarn 21 increases. While the yarn monitoring controller 81 according to the present embodiment is monitoring the yarn defect based on the output from the yarn irregularity sensor 37, information pertaining to the height of the movable tube 42 of the unwinding assisting device 31 is also input into the yarn monitoring controller 81. Because the height of the movable tube 42 is lowered in accordance with the height of the chase portion of the supply bobbin 20 as explained above, the height of the movable tube 42 corresponds to the amount of the yarn 21 remaining on the supply bobbin 20. Taking into account the fact that the hairiness of the yarn 21 increases as the height of the movable tube 42 becomes lower, the threshold value of the yarn thickness for detecting a yarn defect can be varied. In the control according to the present embodiment, the information pertaining to the height of the movable tube 42 indicates the hairiness of the yarn 21.

[0060] In this manner, the yarn monitoring device 34 accurately detects a yarn defect that ought to be eliminated, by taking a tendency of hairiness of the yarn 21 into account.

[0061] The yarn monitoring device 34 includes a not-shown casing in which the yarn irregularity sensor 37 and the yarn monitoring controller 81 are housed.

[0062] As explained above, the yarn monitoring device 34 according to the present embodiment includes the yarn irregularity sensor 37 and the yarn monitoring controller 81. The yarn irregularity sensor 37 monitors the yarn 21 wound by the automatic winder 1 (winder unit 10). The yarn monitoring controller 81 performs the determination function based on the information acquired from the yarn irregularity sensor 37 and the information pertaining to the traverse position of the yarn 21 acquired from the yarn detection sensor 71 of the winder unit 10, and outputs the cutter operation signal.

[0063] The yarn monitoring controller 81 performs the determination function based on the information pertaining to the tension on the yarn 21 acquired from the strain gauge 64 of the tension sensor 60 and the information pertaining to the height of the movable tube 42 acquired from the unwinding assisting controller 51, and outputs the cutter operation signal and/or the winding suspension signal.

[0064] In this manner, the yarn monitoring device 34 monitors the yarn 21, controls the cutter 39 and such-like, not based solely on the information pertaining to the thickness of the yarn 21 but also on additional information. Furthermore, the information is input into the yarn monitoring device 34 with a minimal time lag, and the yarn monitoring device 34 itself (specifically, the CPU arranged in the yarn monitoring device 34) performs the determination function based on the information. Accordingly, the yarn monitoring device 34 can perform an appropriate determination function and a control function at an appropriate timing even at high winding speed or even when the information varies at very short durations.

[0065] The yarn monitoring device 34 according to the present embodiment includes the yarn detection receiving section 83 to receive the yarn detection signal from the yarn detection sensor 71.

[0066] The yarn monitoring device 34 includes the tension receiving section 84 to receive the tension signal from the strain gauge 64 of the tension sensor 60, and the movable tube height receiving section 85 to receive the movable tube height signal from the unwinding assisting controller 51.

[0067] With this structure, the information output by the yarn detection sensor 71 and such-like, can be appropriately input into the yarn monitoring device 34.

[0068] The yarn detection receiving section 83 of the yarn monitoring device 34 according to the present embodiment receives, as a binary value, whether the traverse position of the yarn 21 is in the detection area of the yarn detection sensor 71.

[0069] The tension receiving section 84 receives the tension signal from the strain gauge 64 of the tension sensor 60 as an analog value. The movable tube height receiving section 85 acquires the movable tube height signal from the unwinding assisting controller 51 through digital communication.

[0070] In this manner, the yarn monitoring device 34 acquires the information from the yarn detection sensor 71 and such-like, in a manner that is appropriate for the signal format.

[0071] The yarn monitoring device 34 according to the present embodiment includes the cutter 39 that cuts the yarn 21. The yarn monitoring controller 81 outputs the control signal that controls the operation of the cutter 39.

[0072] With this structure, the yarn monitoring device 34 can cut the yarn 21 by the cutter 39 at the intended accurate timing even if the monitored yarn 21 is being wound at high speed.

[0073] The automatic winder 1 according to the present embodiment includes the yarn monitoring device 34 and the winding section 26 that winds the yarn 21, which has been monitored by the yarn monitoring device 34, to form

the package 23.

[0074] With this structure, the yarn winding machine can realize the above-explained advantageous results.

[0075] The automatic winder 1 according to the present embodiment includes the winder unit 10 that includes the winding section 26, and the unit controller 30 that controls the winder unit 10. The yarn detection signal (information indicating the traverse position of the yarn 21) output by the yarn detection sensor 71 is input into each of the yarn monitoring device 34 and the unit controller 30.

[0076] The tension signal output by the strain gauge 64 of the tension sensor 60 is input into each of the yarn monitoring device 34 and the unit controller 30. The movable tube height signal output by the unwinding assisting controller 51 is also input into the yarn monitoring device 34 and the unit controller 30.

[0077] In this manner, additional information can be effectively utilized in both the monitoring of the yarn 21 and the control of the winder unit 10.

[0078] Although the invention has been described with respect to specific embodiments, various modifications as follows can be made.

[0079] The yarn irregularity sensor 37 can be an optical-type sensor as explained above, or alternatively, an electrostatic capacitance sensor that detects the thickness of the yarn 21 based on the variation in the electrostatic capacitance.

[0080] In the present embodiment, the structure such as the yarn detection sensor 71 is presented as a status acquiring section. However, this is merely an example; the status acquiring section can have any structure if it can acquire any of the tension on the yarn 21, the position of the movable tube 42, the traverse position of the yarn 21, and the hairiness of the yarn 21.

[0081] For example, as mentioned above, the yarn 21 can be traversed by the traverse guide that is driven to run to and fro, instead of the traverse groove 27. When the traverse guide is employed, the information pertaining to the position of the traverse guide can be input, in place of the detection result obtained by the yarn detection sensor 71, into the yarn monitoring device 34. In this structure, the package 23 can be directly driven to rotate, instead of being driven to rotate via the winding drum 29. In an alternative structure, instead of the drum pulse, rotation information (e.g., the number of rotations or rotation speed) of a motor that drives the package 23 to rotate can be input into the yarn monitoring device 34.

[0082] In an alternative structure, the unwinding assisting controller 51 can acquire the height of the movable tube 42 by, for example, an ultrasonic sensor, instead of using the details of the control performed by the lifting and lowering motor 50. A tension sensor that uses a spring and/or a piezoelectric element can be used instead of the load cell-type tension sensor 60. Furthermore, for example, an optical sensor that can directly measure the hairiness of the yarn 21 can be employed instead of using the information pertaining to the height of the movable tube 42 to determine the hairiness of the yarn 21, and signals generated by this optical sensor can be input into the yarn monitoring device 34.

[0083] It is explained above that the yarn monitoring controller 81 performs three control functions. However, this is merely an example; any of the three control functions can be changed or omitted in accordance with the intended use of the automatic winder 1. The drum pulse receiving section 82 can also be omitted.

[0084] The control signal output by the yarn monitoring controller 81 need not be limited to the operation signal of the cutter 39 and the winding suspension signal. The control signal can be a signal for illuminating a lamp arranged on the winder unit 10, a signal for sounding a buzzer, or an alarming signal sent to the unit controller 30 and/or the machine controller 11.

[0085] The yarn monitoring device 34 according to the present invention can be installed in other yarn winding machines, such as an air spinning frame and an open-end spinning frame.

[0086] When the yarn monitoring device 34 performs the determination function based on the first information and also on the tension on the yarn 21 in the yarn winding machine as the second information, the unwinding assisting device 31 (the unwinding assisting member 42) and/or the yarn detection sensor 71 can be omitted. When the yarn monitoring device 34 performs the determination function based on the first information and also on the position of the unwinding assisting member 42 in the unwinding assisting device 31 as the second information, the yarn detection sensor 71 and/or the tension sensor 60 can be omitted. When the yarn monitoring device 34 performs the determination function based on the first information and also on the traverse position of the yarn 21 as the second information, the tension sensor 60 and/or the unwinding assisting device 31 (the unwinding assisting member 42) can be omitted.

[0087] A yarn monitoring device according to an aspect of the present invention includes a sensor and a determining section. The sensor monitors a yarn that is being wound by a yarn winding machine. The determining section performs a determination based on first information acquired from the sensor and second information acquired from a status acquiring section of the yarn winding machine, and outputs a control signal based on the determination. The second information acquired by the determining section includes at least one of a position of an unwinding assisting member in an unwinding assisting device arranged in the yarn winding machine, and hairiness of the yarn.

[0088] In this manner, the yarn monitoring device monitors the yarn and performs the control function with high accuracy based not solely on the first information acquired from the sensor but also on the second information acquired from the status acquiring section. Furthermore, the second information is input into the yarn monitoring device with a minimal time lag so that the yarn monitoring device itself performs the determination function. Accordingly, the yarn monitoring device can perform appropriate

determination function and control function at an appropriate timing even when the yarn winding machine performing winding at a high winding speed or when the second information that can vary at very short durations is used.

[0089] According to another aspect of the present invention, the yarn monitoring device further includes a receiving section that receives the second information from the status acquiring section.

[0090] With this structure, the second information can be appropriately received from the status acquiring section. Furthermore, because the second information is directly input into the yarn monitoring device, a significantly enhanced real-time determination and control functions can be realized.

[0091] In the yarn monitoring device according to still another aspect of the present invention, the receiving section is at least one of a communication receiving section that acquires the second information from the status acquiring section through digital communication, an analog value receiving section that acquires the second information from the status acquiring section as an analog value, and a binary receiving section that acquires the second information from the status acquiring section as a binary value.

[0092] In this manner, the second information output by the status acquiring section can be acquired in a manner that is appropriate for the output format of the second information.

[0093] The yarn monitoring device according to still another aspect of the present invention further includes a cutter capable of cutting the yarn. The determining section outputs as the control signal a signal that causes the cutter to operate and cut the yarn.

[0094] With this structure, even when the monitored yarn is being wound at high speed, the yarn can be cut by the cutter at precisely the intended timing.

[0095] The yarn monitoring device according to still another aspect of the present invention further includes a housing that houses the sensor and the determining section.

[0096] According to still another aspect of the present invention, a yarn winding machine preferably includes the above yarn monitoring device and a winding section that winds the yarn, which has been monitored by the yarn monitoring device, to form a package.

[0097] With this structure, the yarn winding machine can realize the above-explained advantageous results.

[0098] The yarn winding machine according to still another aspect of the present invention further includes a yarn winding unit and a unit controller. The yarn winding unit includes the winding section. The unit controller controls the yarn winding unit. The second information output by the status acquiring section is input into each of the yarn monitoring device and the unit controller.

[0099] In this manner, the second information can be effectively utilized in both the monitoring of the yarn and the control of the yarn winding unit.

Claims

1. A yarn monitoring device comprising:

a sensor (37) adapted to monitor a yarn (21) that is being wound by a yarn winding machine (10);
a determining section (81) adapted to perform a determination based on first information acquired from the sensor (37) and second information acquired from a status acquiring section (51; 64; 71) of the yarn winding machine (10), and to output a control signal based on the determination; and
a cutter (39) adapted to cut the yarn (21), wherein the determining section (81) is adapted to output as the control signal a signal that causes the cutter (39) to operate and cut the yarn (21),
wherein the second information acquired by the determining section (81) includes at least one of a position of an unwinding assisting member (42) in an unwinding assisting device (31) arranged in the yarn winding machine (10), and hairiness of the yarn (21),
wherein the first information indicates a thickness of the yarn (21), wherein the determining section (81) is adapted to output the control signal when the first information indicates a yarn defect,
characterized in that a thickness threshold value for detecting a yarn defect is varied based on the second information.

2. The yarn monitoring device according to Claim 1, further comprising a receiving section (82, 83, 84, 85) adapted to receive the second information from the status acquiring section (51; 64; 71).

3. The yarn monitoring device according to Claim 2, wherein the receiving section is at least one of a communication receiving section (85) adapted to acquire the second information from the status acquiring section (51) through digital communication, an analog value receiving section (84) adapted to acquire the second information from the status acquiring section (64) as an analog value, and a binary receiving section (83) adapted to acquire the second information from the status acquiring section (71) as a binary value.

4. The yarn monitoring device according to claim 1, wherein the second information further includes a traverse position of the yarn and wherein the determining section (81) is adapted to output the control signal when the first information indicates that the yarn has a defect and when the second information indicates that the yarn (21) is moving in a direction from a traverse edge to a traverse center in a traverse stroke of the yarn (21).

5. The yarn monitoring device according to claim 1, wherein the second information further includes a tension on the yarn (21) and wherein the determining section (81) is adapted to output the control signal

- when the second information indicates that the detected tension on the yarn is below a predetermined tension threshold value,
- when the second information indicates that the detected tension on the yarn (21) is normal while the first information indicates that the thickness of the yarn is thinner than a predetermined thickness threshold value, or
- when the second information indicates that the detected tension on the yarn is greater than a predetermined threshold value while the first information indicates that the thickness of the yarn (21) is not thinner than the predetermined thickness threshold value.

6. The yarn monitoring device according to any one of Claims 1 to 5, further comprising a housing adapted to house the sensor (37) and the determining section (81).

7. A yarn winding machine comprising:

the yarn monitoring device (34) according to any one of Claims 1 to 6; and
a winding section (26) adapted to wind the yarn (21), which has been monitored by the yarn monitoring device (34), to form a package (23).

8. The yarn winding machine according to Claim 7, further comprising:

a yarn winding unit (10) that includes the winding section (34); and
a unit controller (30) adapted to control the yarn winding unit (10),

wherein the second information output by the status acquiring section (51; 64; 71) is input into each of the yarn monitoring device (34) and the unit controller (30).

Patentansprüche

1. Eine Garnüberwachungsvorrichtung, die folgende Merkmale aufweist:

einen Sensor (37), der angepasst ist, ein Garn (21) zu überwachen, das durch eine Garnwickelmaschine (10) gewickelt wird;
einen Bestimmungsabschnitt (81), der angepasst ist, eine Bestimmung auf der Basis einer ersten Information, die von dem Sensor (37) gewonnen wird, und einer zweiten Information, die von einem Statusgewinnungsabschnitt (51; 64; 71) der Garnwickelmaschine (10) gewonnen wird, durchzuführen und ein Steuersignal auf der Basis der Bestimmung auszugeben; und
ein Schneidwerkzeug (39), das angepasst ist, das Garn (21) durchzuschneiden, wobei der Bestimmungsabschnitt (81) angepasst ist, ein Signal, das bewirkt, dass das Schneidwerkzeug (39) arbeitet und das Garn (21) durchschneidet, als das Steuersignal auszugeben,
wobei die zweite Information, die durch den Bestimmungsabschnitt (81) gewonnen wird, zumindest eine einer Position eines Abwickelunterstützungsbauglieds (42) in einer Abwickelunterstützungsvorrichtung (31), die in der Garnwickelmaschine (10) angeordnet ist, und einer Haarigkeit des Garns (21) umfasst,
wobei die erste Information eine Dicke des Garns (21) angibt, wobei der Bestimmungsabschnitt (81) angepasst ist, das Steuersignal auszugeben, wenn die erste Information einen Garndefekt angibt,
dadurch gekennzeichnet, dass ein Dickenschwellenwert zum Erfassen eines Garndefekts auf der Basis der zweiten Information variiert.

2. Die Garnüberwachungsvorrichtung gemäß Anspruch 1, die ferner einen Empfangsabschnitt (82, 83, 84, 85) aufweist, der angepasst ist, die zweite Information von dem Statusgewinnungsabschnitt (51; 64; 71) zu empfangen.

3. Die Garnüberwachungsvorrichtung gemäß Anspruch 2, bei der der Empfangsabschnitt zumindest einer eines Kommunikationsempfangsabschnitts (85), der angepasst ist, die zweite Information durch digitale Kommunikation von dem Statusgewinnungsabschnitt (51) zu gewinnen, eines Analogwertempfangsabschnitts (84), der angepasst ist, die zweite Information von dem Statusgewinnungsabschnitt (64) als einen Analogwert zu gewinnen, und eines Binärempfangsabschnitts (83) ist, der angepasst ist, die zweite Information von dem Statusgewinnungsabschnitt (71) als einen Binärwert zu gewinnen.

4. Die Garnüberwachungsvorrichtung gemäß Anspruch 1, bei der die zweite Information ferner eine Traversierposition des Garns umfasst und bei der der Bestimmungsabschnitt (81) angepasst ist, das Steuersignal auszugeben, wenn die erste Information angibt, dass das Garn einen Defekt aufweist, und wenn die zweite Information angibt, dass das Garn (21) sich bei einem Traversierhub des Garns (21) in einer Richtung von einem Traversierrand zu einer Traversiermitte bewegt.

5. Die Garnüberwachungsvorrichtung gemäß Anspruch 1, bei der die zweite Information ferner eine Spannung an dem Garn (21) umfasst und bei der der Bestimmungsabschnitt (81) angepasst ist, das Steuersignal auszugeben,

- wenn die zweite Information angibt, dass die erfasste Spannung an dem Garn unter einem vorbestimmten Spannungsschwellenwert liegt,
- wenn die zweite Information angibt, dass die erfasste Spannung an dem Garn (21) normal ist, während die erste Information angibt, dass die Dicke des Garns dünner als ein vorbestimmter Dickenschwellenwert ist, oder
- wenn die zweite Information angibt, dass die erfasste Spannung an dem Garn größer als ein vorbestimmter Schwellenwert ist, während die erste Information angibt, dass die Dicke des Garns (21) nicht dünner als der vorbestimmte Dickenschwellenwert ist.

6. Die Garnüberwachungsvorrichtung gemäß einem der Ansprüche 1 bis 5, die ferner ein Gehäuse aufweist, das angepasst ist, den Sensor (37) und den Bestimmungabschnitt (81) aufzunehmen.

7. Eine Garnwickelmaschine, die folgende Merkmale aufweist:

die Garnüberwachungsvorrichtung (34) gemäß einem der Ansprüche 1 bis 6; und
einen Wickelabschnitt (26), der angepasst ist, das Garn (21), das durch die Garnüberwachungsvorrichtung (34) überwacht wurde, zu wickeln, um einen Wickelkörper (23) zu bilden.

8. Die Garnwickelmaschine gemäß Anspruch 7, die ferner folgende Merkmale aufweist:

eine Garnwickeleinheit (10), die den Wickelabschnitt (34) umfasst; und
eine Einheitssteuerung (30), die angepasst ist, die Garnwickeleinheit (10) zu steuern,

wobei die zweite Information, die durch den Statusgewinnungsabschnitt (51; 64; 71) ausgegeben wird, sowohl in die Garnüberwachungsvorrichtung (34) als auch die Einheitssteuerung (30) eingegeben wird.

Revendications

1. Dispositif de surveillance de fil comprenant:

un capteur (37) adapté pour surveiller un fil (21) qui est bobiné par une machine de bobinage de fil (10);
un segment de détermination (81) adapté pour effectuer une détermination sur base d'une première information acquise du capteur (37) et d'une deuxième information acquise d'un segment d'acquisition d'état (51; 64; 71) de la machine de bobinage de fil (10), et sortir un signal de commande sur base de la détermination; et
un moyen de coupe (39) adapté pour couper le fil (21), où le segment de détermination (81) est adapté pour sortir, comme signal de commande, un signal qui fait que le moyen de coupe (39) fonctionne et coupe le fil (21),
dans lequel la deuxième information acquise par le segment de détermination (81) comporte au moins l'une parmi une position d'un élément d'assistance au déroulement (42) dans un dispositif d'assistance au déroulement (31) disposé dans la machine de bobinage de fil (10), et la filandrosité du fil (21),
dans lequel la première information indique une épaisseur du fil (21), dans lequel le segment de détermination (81) est adapté pour sortir le signal de commande lorsque la première information indique un défaut de fil,
caractérisé par le fait qu'une valeur de seuil d'épaisseur pour détecter un défaut de fil est modifiée sur base de la deuxième information.

2. Dispositif de surveillance de fil selon la revendication 1, comprenant par ailleurs un segment de réception (82, 83, 84, 85) adapté pour recevoir la deuxième information du segment d'acquisition d'état (51; 64; 71).

3. Dispositif de surveillance de fil selon la revendication 2, dans lequel le segment de réception est au moins l'un parmi un segment de réception de communication (85) adapté pour acquérir la deuxième information du segment d'acquisition d'état (51) par l'intermédiaire d'une communication numérique, un segment de réception de valeur analogique (84) adapté pour acquérir la deuxième information du segment d'acquisition d'état (64) comme valeur analogique, et un segment de réception binaire (83) adapté pour acquérir la deuxième information du segment d'acquisition d'état (71) comme valeur binaire.

4. Dispositif de surveillance de fil selon la revendication 1, dans lequel la deuxième information comporte par ailleurs une position transversale du fil et dans lequel le segment de détermination (81) est adapté pour sortir le signal de commande lorsque la première information indique que le fil présente un défaut et lorsque la deuxième information indique que le fil (21) se déplace dans une direction allant d'un bord transversal à un centre transversal dans une course transversale du fil (21).

5. Dispositif de surveillance de fil selon la revendication 1, dans lequel la deuxième information comporte par ailleurs une tension sur le fil (21) et dans lequel le segment de détermination (81) est adapté pour sortir le signal de commande

- lorsque la deuxième information indique que la tension détectée sur le fil est inférieure à une valeur de seuil de tension prédéterminée,
- lorsque la deuxième information indique que la tension détectée sur le fil (21) est normale tandis que la première information indique que l'épaisseur du fil est inférieure à une valeur de seuil d'épaisseur prédéterminée, ou
- lorsque la deuxième information indique que la tension détectée sur le fil est supérieure à une valeur de seuil prédéterminée tandis que la première information indique que l'épaisseur du fil (21) n'est pas inférieure à la valeur de seuil d'épaisseur prédéterminée.

6. Dispositif de surveillance de fil selon l'une quelconque des revendications 1 à 5, comprenant par ailleurs un logement adapté pour loger le capteur (37) et le segment de détermination (81).

7. Machine de bobinage de fil comprenant:

le dispositif de surveillance de fil (34) selon l'une quelconque des revendications 1 à 6; et
un segment de bobinage (26) adapté pour enrouler le fil (21) qui a été surveillé par le dispositif de surveillance de fil (34), pour former un parquet (23).

8. Machine de bobinage de fil selon la revendication 7, comprenant par ailleurs:

une unité de bobinage de fil (10) qui comporte le segment de bobinage (34); et
un moyen de commande d'unité (30) adapté pour commander l'unité de bobinage de fil (10),

dans lequel la deuxième information sortie par le segment d'acquisition d'état (51; 64; 71) est entrée dans chacun parmi le dispositif de surveillance de fil (34) et le moyen de commande d'unité (30).

FIG.1

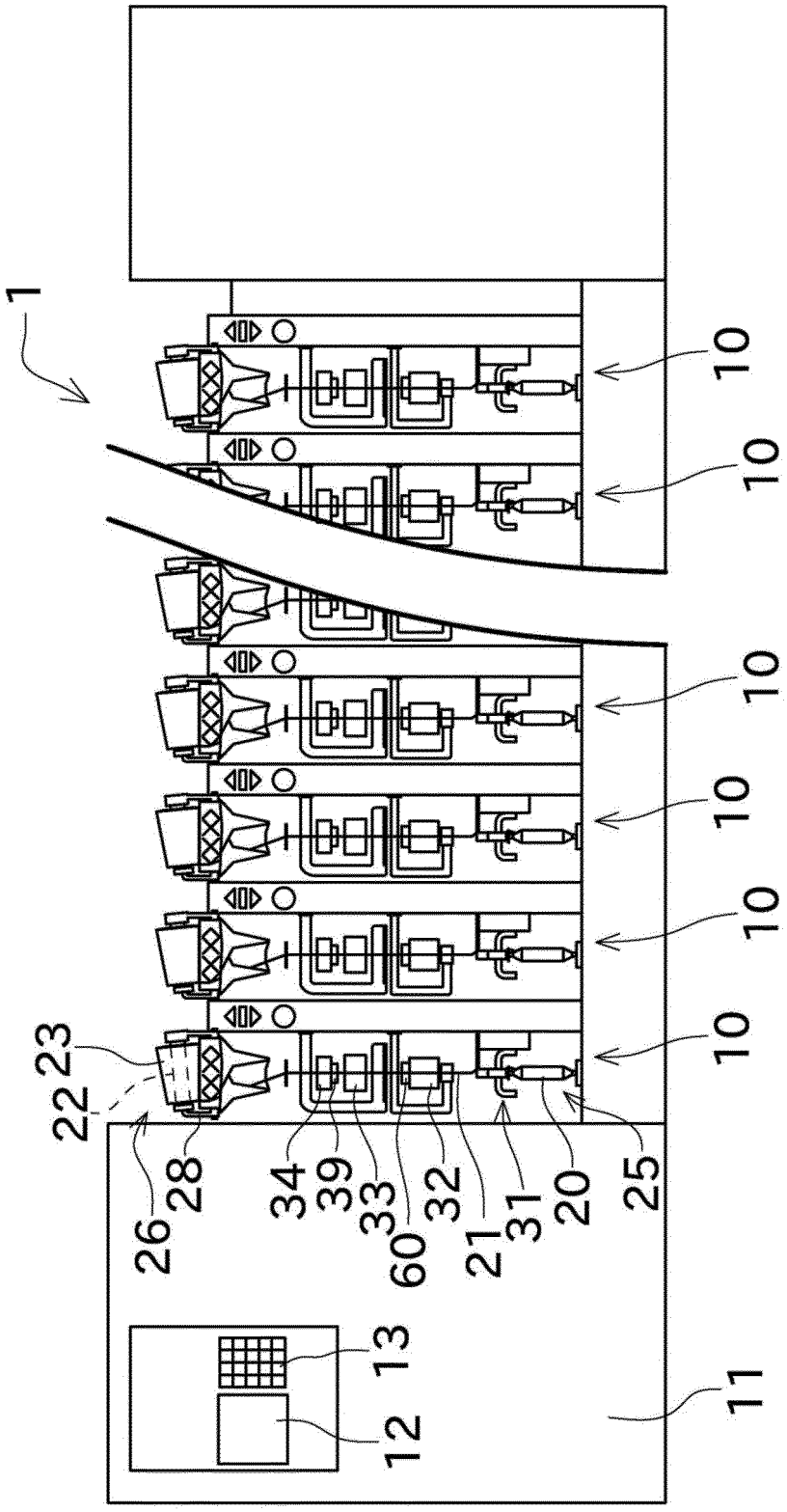

FIG.2

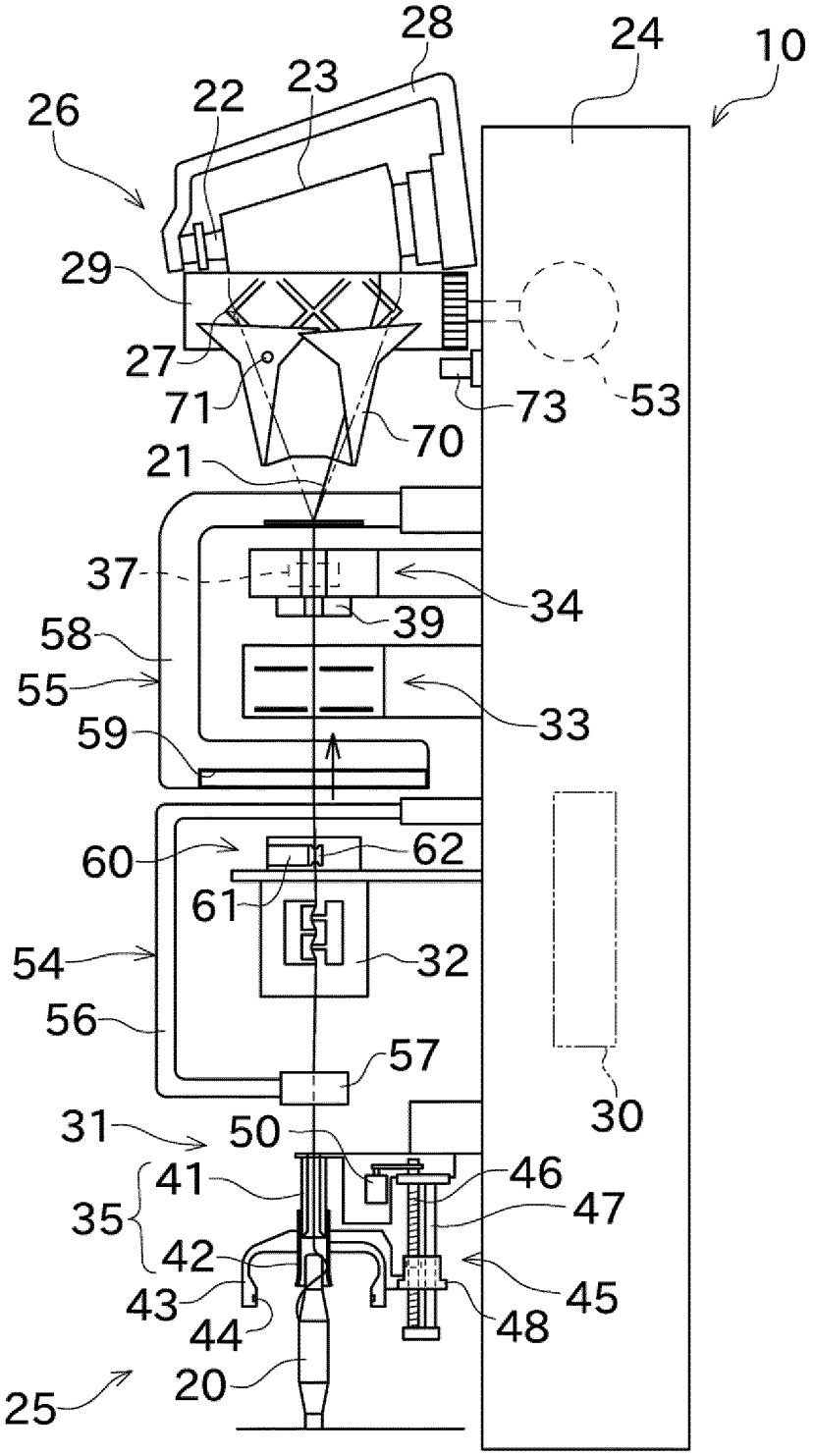
28
24
10
26
22
23
29
27
71
73
53
70
21
37
34
39
58
55
33
59
60
62
61
54
32
56
57
30
31
50
41
46
35
47
42
45
43
48
44
20
25

FIG.3

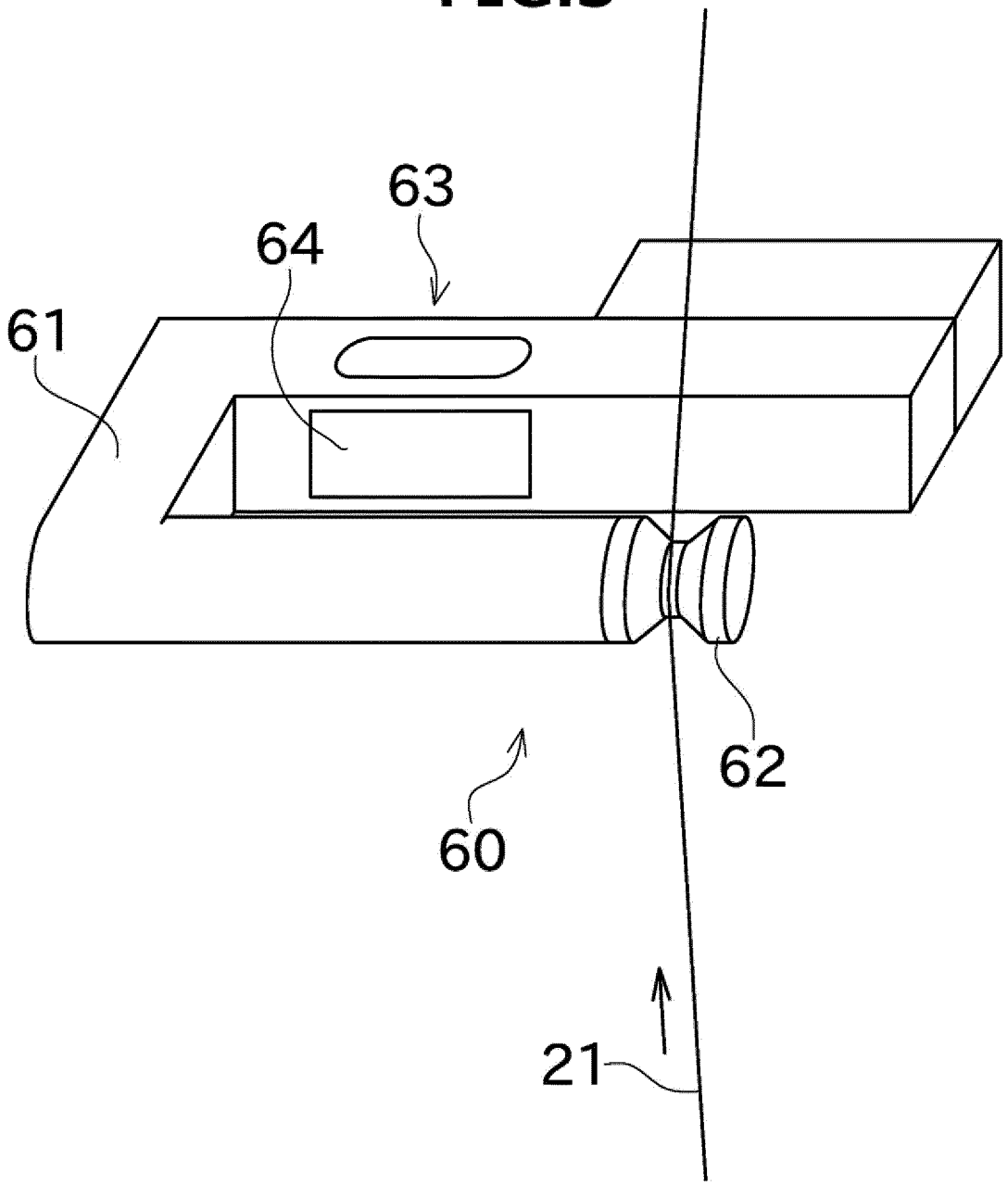

FIG.4

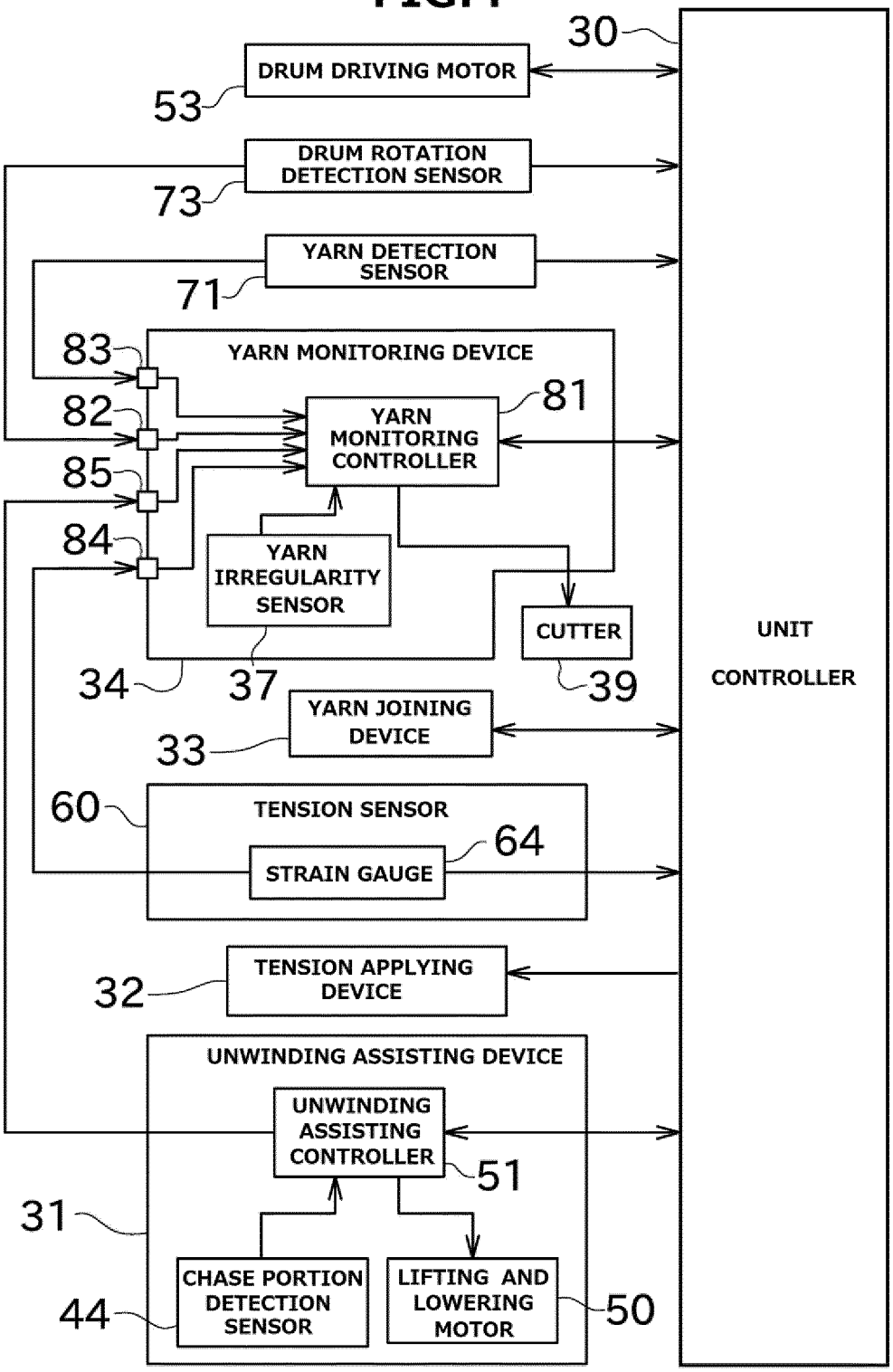
30
DRUM DRIVING MOTOR
53
DRUM ROTATION DETECTION SENSOR
73
YARN DETECTION SENSOR
71
83
YARN MONITORING DEVICE
82
81
YARN MONITORING CONTROLLER
85
84
YARN IRREGULARITY SENSOR
CUTTER
UNIT CONTROLLER
34
37
39
YARN JOINING DEVICE
33
60
TENSION SENSOR
64
STRAIN GAUGE
TENSION APPLYING DEVICE
32
UNWINDING ASSISTING DEVICE
UNWINDING ASSISTING CONTROLLER
51
31
CHASE PORTION DETECTION SENSOR
LIFTING AND LOWERING MOTOR
44
50

REFERENCES CITED IN THE DESCRIPTION

This list of references cited by the applicant is for the reader's convenience only. It does not form part of the European patent document. Even though great care has been taken in compiling the references, errors or omissions cannot be excluded and the EPO disclaims all liability in this regard.

Patent documents cited in the description

- JP 2009190841 A **[0002] [0008]**
- EP 1260476 A1 **[0005]**
- US 4292868 A **[0006]**
- DE 4025696 A1 **[0007]**