(19) Europäisches Patentamt
European Patent Office
Office européen des brevets

(11) EP 3 333 826 A1

(12) EUROPEAN PATENT APPLICATION

(43) Date of publication:
13.06.2018 Bulletin 2018/24

(51) Int Cl.:
G08G 1/017 (2006.01) *G08G 1/054* (2006.01)

(21) Application number: **17306707.5**

(22) Date of filing: **06.12.2017**

(84) Designated Contracting States:
AL AT BE BG CH CY CZ DE DK EE ES FI FR GB GR HR HU IE IS IT LI LT LU LV MC MK MT NL NO PL PT RO RS SE SI SK SM TR
Designated Extension States:
BA ME
Designated Validation States:
MA MD TN

(30) Priority: **12.12.2016 EP 16306662**

(71) Applicant: **Idemia Identity & Security France**
92130 Issy-les-Moulineaux (FR)

(72) Inventor: **WINTER, Christian**
92130 ISSY LES MOULINEAUX (FR)

(74) Representative: **Cabinet Le Guen Maillet**
3, impasse de la Vigie
CS 71840
35418 Saint-Malo Cedex (FR)

(54) METHOD AND A SYSTEM FOR CHECKING AN AVERAGE SPEED OF A VEHICLE IN A SECTION OF ROAD

(57) The present invention concerns a method and system for checking an average speed of a vehicle in a section of road. The invention:
- captures an image of a number plate of the vehicle,
- executes an ANPR algorithm in order to extract figures and characters of the number plate,
- memorizes at least the time of the image capture, the extracted figures and characters of the number plate and a location at which the image capture is performed,
- checks if the extracted figures and characters of the number plate are memorized two times,
- obtains a road shortest path between the locations of the two image captures,
- determines if the average speed of the vehicle between the two locations is upper than the information representative of a theoretical maximum speed limitation between the two locations.
- notifies it through a display of an enforcement vehicle.

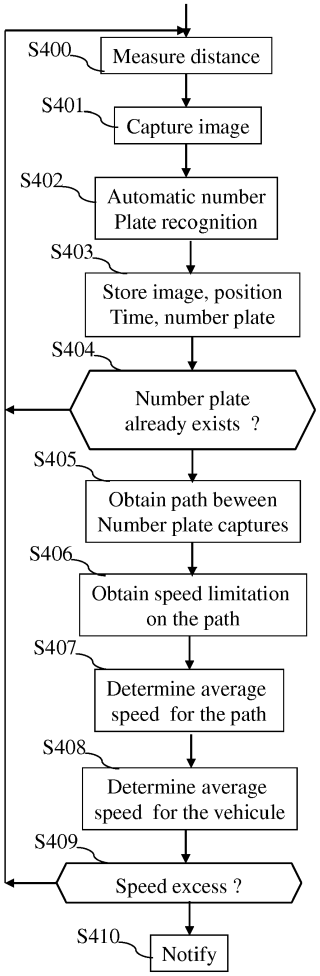

Fig. 4

EP 3 333 826 A1

Description

[0001] The present invention relates generally to a method and a system for checking an average speed of a vehicle in a section of road.

[0002] A traffic enforcement camera, also named red light camera, road safety camera, road rule camera, is a camera which may be mounted beside or over a road or installed in an enforcement vehicle to detect traffic regulation violations like for example speeding.

[0003] Speed enforcement cameras are used to monitor compliance with speed limits, which may use automatic number plate recognition.

[0004] Fixed speed camera systems that measure the time taken by a vehicle to travel between two or more fairly distant sites, from several hundred metres to several kilometres, are called Automatic Number Plate Recognition (ANPR) cameras. These cameras measure the time taken by vehicles to move over a known fixed distance, and then calculate the vehicle's average speed for the distance. The name derives from the fact that the technology uses infrared cameras linked to a computer to read a vehicle's registration number and identify it in real-time.

[0005] As the location of the automatic number plate recognition systems is well known by the vehicle drivers, some of them respect the speed limitation within the area covered by the automatic number plate recognition system and once the vehicle leaves the area, vehicle drivers violate the authorized speed limit.

[0006] Mobile automatic number plate recognition systems embedded within enforcement vehicles, like police cars, measure the instantaneous speed of vehicles and are not able today to measure an average speed.

[0007] The present invention aims to overcome the aforementioned problems in order to provide a mobile automatic number plate recognition system.

[0008] To that end, the present invention concerns a method for checking an average speed of a vehicle in a section of road, characterized in that the method comprises the steps of:

- capturing an image of a number plate of the vehicle,
- executing an automatic number plate recognition algorithm in order to extract figures and characters of the number plate,
- memorizing the captured image together with the time of the image capture, the extracted figures and characters of the number plate and a location at which the image capture is performed,
- checking if the extracted figures and characters of the number plate are memorized two times,
- obtaining a shortest path between the locations of the two image captures,
- determining information representative of a theoretical maximum speed between the two locations,
- determining information representative of an average speed of the vehicle between the two locations,
- checking if information representative of the average speed of the vehicle between the two locations is upper than the information representative of a theoretical maximum speed limitation between the two locations,
- notifying, through a display of an enforcement vehicle to an occupant of the enforcement vehicle, information representative of the average speed of the vehicle together with the information representative of the theoretical maximum speed between the two locations.

[0009] The present invention also concerns a system for determining an average speed of a vehicle in a section of road, characterized in that the system comprises:

- means for capturing an image of a number plate of the vehicle,
- means for executing an automatic number plate recognition algorithm in order to extract figures and characters of the number plate,
- means for memorizing the captured image together with the time of the image capture, the extracted figures and characters of the number plate and a location at which the image capture is performed,
- means for checking if the extracted figures and characters of the number plate are memorized two times,
- means for obtaining a shortest path between the locations of the two image captures,
- means for determining information representative of a theoretical maximum speed between the two locations,
- means for determining information representative of an average speed of the vehicle between the two locations,
- means for checking if information representative of the average speed of the vehicle between the two locations is upper than the information representative of a theoretical maximum speed limitation between the two locations,
- means for notifying, through a display of an enforcement vehicle to an occupant of the enforcement vehicle, information representative of the average speed of the vehicle together with the information representative of the theoretical maximum speed between the two locations.

[0010] Thus, the occupants of the enforcement vehicle get immediate feedback about speed violations of vehicles, so they can directly decide to stop the vehicle for additional control like for example the driver license or tachograph data.

[0011] According to a particular feature, the capturing of the image of the number plate of the vehicle is performed by the enforcement vehicle that is moving.

[0012] According to a particular feature, the capturing of the image is performed when the moving enforcement vehicle overtakes or is overtaken by the vehicle.

[0013] Thus, good quality images can be taken from the number plate of the vehicle.

[0014] According to a particular feature, the capturing of the image is performed when the moving enforcement vehicle is at a predetermined distance of the vehicle.

[0015] Thus, the geolocation of the vehicles can be calculated by exact position of the enforcement vehicle and the predetermined distance.

[0016] According to a particular feature, the capturing, the automatic number plate recognition algorithm execution, the memorizing, the checking, the determining and the notifying are performed by a mobile automatic number plate recognition system comprised in the moving enforcement vehicle.

[0017] Thus, a stand alone implementation within the enforcement vehicle is possible. No central database would be required, which may cause discussion about data protection and privacy.

[0018] According to a particular feature, the capturing, the automatic number plate recognition algorithm execution, the memorizing are performed by a mobile automatic number plate recognition system comprised in the moving enforcement vehicle, the checking, the determining are performed by a server, the notifying is performed by the mobile automatic number plate recognition system comprised in the moving enforcement vehicle and the mobile automatic number plate recognition system transfers to the server a message comprising the output of the extracted figures and characters of the number plate, the time and the position and the server transfers, to the mobile automatic number plate recognition system comprised in the moving enforcement vehicle, a message comprising the average speed of the vehicle together with the average speed limitation between the two locations.

[0019] Thus, data captured by mobile enforcement vehicles can be feed into existing central servers running with Automatic Number Plate Recognition system.

[0020] According to a particular feature, the figures and characters memorized two times are received from different mobile automatic number plate recognition systems comprised in the different moving enforcement vehicles.

[0021] Thus, two enforcement vehicle can share captures and are not required to capture a vehicle two times before being able to check the average speed of a vehicle.

[0022] According to a particular feature, the figures and characters memorized the first time are received from a fixed speed enforcement camera or a drone.

[0023] Thus, the enforcement vehicle can check the average speed of a vehicle already when capturing it the first time.

[0024] According to a particular feature, the capturing of the image of the number plate of the vehicle is performed by another enforcement vehicle that is moving.

[0025] Thus, the occupants of the enforcement vehicle, that is for example a high speed vehicle that stays at the border of the road, can get immediate feedback about speed violations of vehicles, so they can directly decide to intercept the vehicle.

[0026] According to a particular feature, the capturing of the image, by the other enforcement vehicle that is moving, is performed when the other moving enforcement vehicle overtakes or is overtaken by the vehicle or when the other moving enforcement vehicle is at a predetermined distance of the vehicle.

[0027] Thus, good quality images can be taken from the number plate of the vehicle, the geolocation of the vehicles can be calculated by exact position of the enforcement vehicle and the predetermined distance.

[0028] According to a particular feature, the capturing, the automatic number plate recognition algorithm execution and the memorizing are performed by an automatic number plate recognition system comprised in the other mobile enforcement vehicle that is moving, the checking and the determining are performed by a server, the notifying is performed by the mobile automatic number plate recognition system comprised in the enforcement vehicle and the automatic number plate recognition system comprised in the other mobile enforcement vehicle transfers to the server a message comprising the output of the extracted figures, characters of the number plate and the time and the position the server transfers to the automatic number plate recognition system comprised in the enforcement vehicle, a message comprising the average speed of the vehicle together with the average speed limitation between the two locations.

[0029] Thus, data captured by mobile enforcement vehicles can be fed into existing central servers running with Automatic Number Plate Recognition system.

[0030] According to a particular feature, the figures and characters memorized the first time are received from a fixed speed enforcement camera or from a drone.

[0031] The characteristics of the invention will emerge more clearly from a reading of the following description of an example embodiment, the said description being produced with reference to the accompanying drawings, among which :

Fig. 1a represents a portion of road in which the present invention is implemented according to a first mode of realization;

Fig. 1b represents a portion of road in which the present invention is implemented according to a second mode of realization;

Fig. 1c represents a portion of road in which the present invention is implemented according to a third mode of realization;

Fig. 1d represents a portion of road in which the present invention is implemented according to a fourth mode of realization;

Fig. 2 is a diagram representing the architecture of a mobile automatic number plate recognition system according to the present invention ;

Fig. 3 is a diagram representing the architecture of

a server in which the present invention is implemented;

Fig. 4 discloses an example of an algorithm executed by a mobile automatic number plate recognition system according to the first mode of realization of the present invention;

Fig. 5 discloses an example of an algorithm executed by a mobile automatic number plate recognition system according to the second and third modes of realization of the present invention;

Fig. 6 discloses an example of an algorithm executed by a server according to the second and fourth modes of realization of the present invention.

Figs. 7 disclose an example of an algorithm executed by an automatic number plate recognition system located in an enforcement vehicle according to the fourth mode of realization of the present invention.

[0032] **Fig. 1a** represents a portion of road in which the present invention is implemented according to a first mode of realization.

[0033] According to the first mode of realization of the present invention, a mobile automatic number plate recognition system 100 is embedded within an enforcement vehicle PLa like, for example a police car.

[0034] The mobile automatic number plate recognition system 100 does not check the current maximum speed, but the average speed of vehicles in a given sector or section of road.

[0035] The sector starts when the enforcement vehicle PLa car overtakes or is overtaken by a vehicle VH a first time at a position P1 or when the vehicle VH is in front of, behind of or next to the enforcement vehicle and stops when the enforcement vehicle PLa car overtakes or is overtaken by the vehicle VH a second time at a position P2 or when the vehicle VH is in front of, behind of or next to the enforcement vehicle.

[0036] Usually, motorway police cars stop or patrol at each service area of the motorway. Prior to the service area, the motorway police car may overtake cars or trucks. The number plate of each vehicle VH which overtakes or is overtaken by the motorway police car or is in front of or behind the motorway police car is captured by a camera, the number plate is recognized and stored with current geolocation and time inside a local database.

[0037] When the stop or the patrol ends, the motorway police car drives again on the road and the number plate of each vehicle VH which overtakes or is overtaken by the motorway police car or is in front of or behind the motorway police car is captured by a camera, the number plate is recognized and stored with current geolocation and time inside a local database embedded within the motorway police car.

[0038] The mobile automatic number plate recognition system 100 checks in the database if there is a "match" with a previously recorded entry. In case of a match, the mobile automatic number plate recognition system 100 calculates the average speed of the vehicle of which the number plate matches between the two recorded geolocations taking the shortest possible path. The shortest possible path may be determined according to a map, a GPS system. The mobile automatic number plate recognition system 100 determines an average speed of the vehicle and displays information representative of the average speed to the police officers in the car together with information representative of the theoretical maximum allowed speed for the given sector.

[0039] The police officers can decide case by case to stop the vehicle.

[0040] For example, if the vehicle is a truck, the police officer may stop the truck in order to check the tachograph of the truck and file a ticket if necessary.

[0041] **Fig. 1b** represents a portion of road in which the present invention is implemented according to a second mode of realization.

[0042] According to the second mode of realization of the present invention, mobile automatic number plate recognition systems 100 are embedded within a plurality of enforcement vehicles PLa and PLb which are linked to a server Serv and the clocks of which are synchronized.

[0043] The mobile automatic number plate recognition systems 100 do not check the current maximum speed, but the average speed of vehicles in a given sector.

[0044] The sector starts when a first enforcement vehicle PL1b car overtakes or is overtaken by a vehicle VH or is in front of or behind the enforcement vehicle a first time at a position P1. The sector stops when a second enforcement vehicle PL2b car overtakes or is overtaken or is in front of or behind the enforcement vehicle by the vehicle VH a second time at a position P2.

[0045] When a first enforcement vehicle PL1b overtakes cars or trucks or is in front of or behind cars or trucks, the number plate of each vehicle VH which overtakes or is overtaken by the enforcement vehicle PL1b is captured by a camera, the number plate is recognized and transferred to the server Serv together with the current geolocation and time.

[0046] When a second enforcement vehicle PL2b overtakes cars or trucks or is in front of or behind cars or trucks, the number plate of each vehicle VH which overtakes or is overtaken by the enforcement vehicle PL2b or is in front of or behind the second enforcement vehicle PL2b is captured by a camera, the number plate is recognized and transferred to the server Serv together with the current geolocation and time.

[0047] The server Serv checks in the database if there is a "match" with a previously recorded entry that may be received by the enforcement vehicle PL1b or another enforcement vehicle PL1a. In case of a match, the server Serv calculates the average speed of the vehicle of which the number plate matches between the two recorded geolocations taking the shortest possible path. The shortest possible path may be determined according to a map, a GPS system. The server Serv determines an average speed of the vehicle and, if the average speed is upper

than the theoretical maximum allowed speed between both captures, the server Serv commands the transfer of a message to the enforcement vehicle PL2b which has performed the last capture.

[0048] The mobile automatic number plate recognition system 100 displays information representative of the average speed to the police officers in the enforcement vehicle PL2b together with information representative of the theoretical maximum allowed speed for the given sector.

[0049] The police officers can decide case by case to stop the vehicle.

[0050] For example, if the vehicle is a truck, the police officer may stop the truck in order to check the tachograph of the truck and file a ticket if necessary.

[0051] **Fig. 1c** represents a portion of road in which the present invention is implemented according to a third mode of realization.

[0052] According to the third mode of realization of the present invention, mobile automatic number plate recognition systems 100 are embedded within a plurality of enforcement vehicles PLc, within fixed speed enforcement cameras RD and within drones which are linked to a server Serv.

[0053] The mobile automatic number plate recognition systems 100 do not check the current maximum speed, but the average speed of vehicles in a given sector.

[0054] The sector starts when a vehicle VH goes through an area controlled by the fixed speed enforcement camera RD or a drone at a position P1. The sector stops when an enforcement vehicle PLc car overtakes or is overtaken by the vehicle VH at a position P2 or when the vehicle VH is in front of or behind the enforcement vehicle.

[0055] When the vehicle VH goes through the area controlled by the fixed speed enforcement camera RD, the number plate of the vehicle VH is captured by a camera, the number plate is recognized and transferred to the server Serv together with the current geolocation and time.

[0056] When an enforcement vehicle PLc overtakes cars or trucks or is in front of or behind the cars or trucks, the number plate of each vehicle VH which overtakes or is overtaken by the enforcement vehicle PLc or which is in front of or behind the enforcement vehicle PLc is captured by a camera, the number plate is recognized and transferred to the server Serv together with the current geolocation and time.

[0057] The server Serv checks in the database if there is a "match" with a previously recorded entry. In case of a match, the server Serv calculates the average speed of the vehicle of which the number plate matches between the two recorded geolocations taking the shortest possible path. The shortest possible path may be determined according to a map, a GPS system. The server Serv determines an average speed of the vehicle and, if the average speed is upper than the theoretical maximum allowed speed between both captures, the server Serv commands the transfer of a message to the enforcement vehicle PLc which has performed the last capture.

[0058] The mobile automatic number plate recognition system 100 displays information representative of the average speed to the police officers in the enforcement vehicle PLc together with the information representative of theoretical maximum allowed speed for the given sector.

[0059] The police officers can decide case by case to stop the vehicle.

[0060] For example, if the vehicle is a truck, the police officer may stop the truck in order to check the tachograph of the truck and file a ticket if necessary.

[0061] **Fig. 1d** represents a portion of road in which the present invention is implemented according to a fourth mode of realization.

[0062] According to the fourth mode of realization of the present invention, mobile automatic number plate recognition systems 100 are embedded within a plurality of enforcement vehicles PLc, within fixed speed enforcement cameras RD and within drones which are linked to a server Serv.

[0063] The mobile automatic number plate recognition systems 100 do not check the current maximum speed but the average speed of vehicles in a given sector.

[0064] The sector starts when a vehicle VH goes through an area controlled by a fixed speed enforcement camera or a drone or a moving enforcement vehicle RD1 at a position P1. The sector stops when the vehicle VH goes through an area controlled by a fixed speed enforcement camera or a drone or a moving or not enforcement vehicle RD2 at a position P2.

[0065] When the vehicle VH goes through the area controlled by the fixed speed enforcement camera or a drone or a moving enforcement vehicle RD1, the number plate of the vehicle VH is captured by a camera, the number plate is recognized and transferred to the server Serv together with the current geolocation and time.

[0066] When the vehicle VH goes through the area controlled by the fixed speed enforcement camera or a drone or the moving or not enforcement vehicle RD2, the number plate of the vehicle VH is captured by a camera, the number plate is recognized and transferred to the server Serv together with the current geolocation and time.

[0067] The server Serv checks in the database if there is a "match" with a previously recorded entry. In case of a match, the server Serv calculates the average speed of the vehicle the number plate of which matches between the two recorded geolocations taking the shortest possible path. The shortest possible path may be determined according to a map, a GPS system. The server Serv determines an average speed of the vehicle and, if the average speed is upper than the theoretical maximum allowed speed between both captures, the server Serv determines the closest moving enforcement vehicle which may be the moving enforcement vehicle which has performed the last capture or may be an enforcement

vehicle PLc that stays along the path taken by the vehicle VH.

[0068] The server Serv commands the transfer of a message to the closest moving enforcement vehicle which may be the moving enforcement vehicle which has performed the last capture or to the enforcement vehicle PLc.

[0069] The mobile automatic number plate recognition system 100, located in the closest moving enforcement vehicle which may be the moving enforcement vehicle which has performed the last capture or in the enforcement vehicle PLc, displays information representative of the average speed to the police officers in the enforcement vehicle PLc or in the moving enforcement vehicle which has performed the last capture together with the information representative of theoretical maximum allowed speed for the given sector.

[0070] The police officers can decide case by case to stop the vehicle.

[0071] For example, if the vehicle is a truck, the police officer may stop the truck in order to check the tachograph of the truck and file a ticket if necessary.

[0072] **Fig. 2** is a diagram representing the architecture of a mobile automatic number plate recognition system according to the present invention.

[0073] The mobile automatic number plate recognition system 100 has, for example, an architecture based on components connected together by a bus 201 and a processor 200 controlled by the programs as disclosed in Fig. 4 or 5 or 7.

[0074] It has to be noted here that the mobile automatic number plate recognition system 100 may have an architecture based on dedicated integrated circuits.

[0075] The bus 201 links the processor 200 to a read only memory ROM 202, a random access memory RAM 203, a network interface 204, a display 205, a Global Positioning System (GPS) 206, a camera 207 and a clock 208.

[0076] The memory 203 contains registers intended to receive variables and the instructions of the program related to the algorithm as disclosed in Fig. 4 or 5 or 7.

[0077] The read only memory 202 contains instructions of the program related to the algorithm as disclosed in Fig. 4 or 5 or 7, which are transferred, when the mobile automatic number plate recognition system 100 is powered on, to the random access memory 203.

[0078] Any and all steps of the algorithm described hereafter with regard to Fig. 4 or 5 or 7 may be implemented in software by execution of a set of instructions or program by a programmable computing machine, such as a PC (*Personal Computer*), a DSP (*Digital Signal Processor*) or a microcontroller; or else implemented in hardware by a machine or a dedicated component, such as an FPGA (*Field-Programmable Gate Array*) or an ASIC (*Application-Specific Integrated Circuit*).

[0079] In other words, the mobile automatic number plate recognition system 100 includes circuitry, or a device including circuitry, causing the mobile automatic number plate recognition system 100 to perform the steps of the algorithm described hereafter with regard to Fig. 4 or 5 or 7.

[0080] **Fig. 3** is a diagram representing the architecture of a server in which the present invention is implemented.

[0081] The server Serv has, for example, an architecture based on components connected together by a bus 301 and a processor 300 controlled by the program as disclosed in Fig. 6.

[0082] The bus 301 links the processor 300 to a read only memory ROM 302, a random access memory RAM 303, a map module 306 and a network interface 304.

[0083] The memory 303 contains registers intended to receive variables and the instructions of the program related to the algorithm as disclosed in Fig. 6.

[0084] The read only memory 302 contains instructions of the program related to the algorithm as disclosed in Fig. 6, which are transferred, when the server Serv is powered on, to the random access memory 303.

[0085] Any and all steps of the algorithm described hereafter with regard to Fig. 6 may be implemented in software by execution of a set of instructions or program by a programmable computing machine, such as a PC (*Personal Computer*), a DSP (*Digital Signal Processor*) or a microcontroller; or else implemented in hardware by a machine or a dedicated component, such as an FPGA (*Field-Programmable Gate Array*) or an ASIC (*Application-Specific Integrated Circuit*).

[0086] In other words, the server Serv includes circuitry, or a device including circuitry, causing the RSU type base station 30 to perform the steps of the algorithm described hereafter with regard to Fig. 6.

[0087] **Fig. 4** discloses an example of an algorithm executed by a mobile automatic number plate recognition system according to the first mode of realization of the present invention.

[0088] The present algorithm is disclosed in an example wherein it is executed by the processor 200 of the mobile automatic number plate recognition system.

[0089] At step S400, the processor 200 determines the distance separating the enforcement vehicle PL from the vehicle VH.

[0090] The distance is for example determined by measuring the size of the number plate of the vehicle VH within an image taken by the camera 208 and comparing it to a predetermined value.

[0091] If the size of the number plate of the vehicle VH within an image taken by the camera 208 corresponds to the predetermined value, the distance between the enforcement vehicle PL and the vehicle VH is equal to a predetermined distance.

[0092] The processor 200 moves then to step S401 and commands the camera 208 to capture an image of the number plate. The image is memorized in the RAM memory 203.

[0093] At step S402, the processor 200 applies an automatic number plate recognition algorithm in order to extract figures and characters of the number plate.

[0094] At step S403, the processor 200 stores in the memory 203, in combination with the image, the output of the extracted figures and characters of the number plate, the time of the clock 208 and the position given by the GPS module 206.

[0095] It has to be noted here that the image, the output of the extracted figures and characters of the number plate, the time and the position are memorized during a predetermined period of time, for example, 15mn, 1 hour, 4 hours, 8 hours, and deleted once the predetermined period of time ends.

[0096] At step S404, the processor 200 checks if the figures and characters of the number plate have already been stored in the RAM memory 203.

[0097] If the figures and characters of the number plate have already been stored in the RAM memory 203, the processor 200 moves to step S405. Otherwise, the processor 200 returns to step S400.

[0098] At step S405, the processor 200 obtains the road shortest path between the points P1 and P2. The road shortest path is for example given by the GPS module 206 which has a GPS-based geographical navigation capability.

[0099] At next step S406, the processor 200 obtains the maximum speed limitation or limitations along the section.

[0100] At next step S407, the processor 200 determines information representative of the average speed for the obtained road shortest path using the obtained maximum speed limitation or limitations along the section that corresponds to a theoretical maximum speed.

[0101] At next step S408, the processor 200 determines the average speed of the vehicle VH along the obtained road shortest path using the times stored at positions P1 and P2.

[0102] At next step S409, the processor 200 checks if the average speed of the vehicle VH is upper than information representative of the theoretical maximum speed for the obtained road shortest path.

[0103] If the average speed of the vehicle VH is upper than the average speed for the obtained road shortest path, the processor 200 moves to step S410. Otherwise, the processor 200 returns to step S400.

[0104] At step S410, the processor 200 notifies through the display 205 information representative of the average speed to the police officers in the enforcement vehicle PL together with information representative of the theoretical maximum allowed speed for the given sector.

[0105] In a variant, the processor 200 notifies through the display 205 the difference of time between the instant the vehicle VH enters in the sector and the instant the vehicle VH leaves the sector.

[0106] The police officers can decide case by case to stop the vehicle and/or to take a picture of the driver of the vehicle.

[0107] For example, if the vehicle is a truck, the police officer may stop the truck in order to check the tachograph of the truck and file a ticket if necessary.

[0108] **Fig. 5** discloses an example of an algorithm executed by a mobile automatic number plate recognition system according to the second and third modes of realization of the present invention.

[0109] The present algorithm is disclosed in an example wherein it is executed by the processor 200 of the mobile automatic number plate recognition system.

[0110] At step S500, the processor 200 determines the distance separating the enforcement vehicle PL from the vehicle VH.

[0111] The distance is for example determined by measuring the size of the number plate of the vehicle VH within an image taken by the camera 208 and comparing it to a predetermined value.

[0112] If the size of the number plate of the vehicle VH within an image taken by the camera 208 corresponds to the predetermined value, the distance between the enforcement vehicle PL and the vehicle VH is equal to a predetermined distance.

[0113] The processor 200 moves then to step S501 and commands the camera 208 to capture an image of the number plate. The image is memorized in the RAM memory 203.

[0114] At step S502, the processor 200 applies an automatic number plate recognition algorithm in order to extract figures and characters of the number plate.

[0115] At step S503, the processor 200 commands the transfer to the server Serv through the network interface 204, in combination with the image, the output of the extracted figures and characters of the number plate, the time of the clock 208 and the position given by the GPS module 206.

[0116] At step S504, the processor 200 checks if a message is received from the server Serv. The message comprises information representative of the average speed of the vehicle VH together with information representative of the theoretical maximum allowed speed for the given sector.

[0117] The message may further comprise an image, figures and characters of the number plate, the time and position of a previous image capture performed by the mobile automatic number plate recognition system or another mobile automatic number plate recognition system, the difference of time between the instant the vehicle VH enters in the sector and the instant the vehicle VH leaves the sector.

[0118] At next step S505, the processor 200 notifies, through the display 205, information representative of the average speed to the police officers in the enforcement vehicle PL together with information representative of the theoretical maximum allowed speed for the given sector.

[0119] In a variant, the processor 200 notifies through the display 205 the difference of time between the instant the vehicle VH enters in the sector and the instant the vehicle VH leaves the sector.

[0120] The police officers can decide case by case to stop the vehicle and/or to take a picture of the driver of

the vehicle.

[0121] For example, if the vehicle is a truck, the police officer may stop the truck in order to check the tachograph of the truck and file a ticket if necessary.

[0122] **Fig. 6** discloses an example of an algorithm executed by a server according to the second, third and fourth modes of realization of the present invention.

[0123] The present algorithm is disclosed in an example wherein it is executed by the processor 300 of the server Serv.

[0124] At step S600, the processor 300 receives a message from a mobile automatic number plate recognition system through the network interface 304. The message comprises, in combination with an image, the output of the extracted figures and characters of the number plate, a time and a position.

[0125] At step S601, the processor 300 stores the image, the output of the extracted figures and characters of the number plate, the time and the position in the RAM memory 303.

[0126] It has to be noted here that the image, the output of the extracted figures and characters of the number plate, the time and the position are memorized during a predetermined period of time, for example, 15mn, 1 hour, 4 hours and deleted once the predetermined period of time ends.

[0127] At step S602, the processor 300 checks if the figures and characters of the number plate have already been stored in the RAM memory 303.

[0128] If the figures and characters of the number plate have already been stored in the RAM memory 303, the processor 300 moves to step S603. Otherwise, the processor 300 returns to step S600.

[0129] At step S603, the processor 300 obtains the road shortest path between the points P1 and P2. The road shortest path is for example given by the map module 306 or by a GPS-based geographical navigation system.

[0130] At next step S604, the processor 300 obtains the maximum speed limitation or limitations along the section.

[0131] At next step S605, the processor 300 determines the theoretical maximum speed for the obtained road shortest path using the obtained maximum speed limitation or limitations along the section.

[0132] At next step S606, the processor 300 determines the average speed of the vehicle VH along the obtained road shortest path using the times stored at positions P1 and P2.

[0133] At next step S607, the processor 300 checks if the average speed of the vehicle VH is upper than the theoretical maximum speed for the obtained road shortest path.

[0134] If the average speed of the vehicle VH is upper than the average speed for the obtained road shortest path, the processor 300 moves to step S608. Otherwise, the processor 300 returns to step S600.

[0135] At step S608, the processor 300 commands, according to the second and third modes of realization, the transfer of a message to the mobile automatic number plate recognition system which transferred the message received at step S600.

[0136] According to the fourth mode of realization, at step S608, the processor 300 determines the closest moving enforcement vehicle which may be the moving enforcement vehicle which has performed the last capture or may be an enforcement vehicle PLc that stays along the path taken by the vehicle VH.

[0137] The server Serv commands the transfer of a message to the closest moving enforcement vehicle which may be the moving enforcement vehicle which has performed the last capture or to the enforcement vehicle PLc.

[0138] The message comprises the average speed of the vehicle VH together with the theoretical maximum allowed speed for the given sector.

[0139] The message may further comprise an image, figures and characters of the number plate, the time and position of a previous image capture performed by the mobile automatic number plate recognition system or another mobile automatic number plate recognition system, the difference of time between the instant the vehicle VH enters in the sector and the instant the vehicle VH leaves the sector.

[0140] After that, the processor 300 returns to step S600.

[0141] **Figs. 7** disclose an example of an algorithm executed by an automatic number plate recognition system located in an enforcement vehicle according to the fourth mode of realization of the present invention.

[0142] The present algorithm is disclosed in an example wherein it is executed by the processor 200 of the automatic number plate recognition system comprised in an enforcement vehicle.

[0143] The algorithm of Fig. 7a and 7b may be executed by the automatic number plate recognition system comprised in the same enforcement vehicle that stays at the border of the road or the algorithm of Fig. 7b may be executed by the automatic number plate recognition system comprised in an enforcement vehicle that stays at the border of the road and the algorithm of Fig. 7b may be executed by the automatic number plate recognition system comprised in a fixed speed enforcement camera or a drone.

[0144] At step S701 of Fig. 7a, the processor 200 commands the camera 208 to capture an image of the number plate. The image is memorized in the RAM memory 203.

[0145] At step S702, the processor 200 applies an automatic number plate recognition algorithm in order to extract figures and characters of the number plate.

[0146] At step S703, the processor 200 commands the transfer to the server Serv through the network interface 204, in combination with the image, the output of the extracted figures and characters of the number plate, the time of the clock 208 and the position given by the GPS module 206.

[0147] At step S710 of Fig. 7b, the processor 200 checks if a message is received from the server Serv. The message comprises information representative of the average speed of the vehicle VH together with information representative of the theoretical maximum allowed speed for the given sector.

[0148] The message may further comprise an image, figures and characters of the number plate, the time and position of a previous image capture performed by the mobile automatic number plate recognition system or another mobile automatic number plate recognition system, the difference of time between the instant the vehicle VH enters in the sector and the instant the vehicle VH leaves the sector.

[0149] At next step S711, the processor 200 notifies, through the display 205, information representative of the average speed to the police officers in the enforcement vehicle PL together with information representative of the theoretical maximum allowed speed for the given sector.

[0150] In a variant, the processor 200 notifies through the display 205 the difference of time between the instant the vehicle VH enters in the sector and the instant the vehicle VH leaves the sector.

[0151] The police officers can decide case by case to stop the vehicle and/or to take a picture of the driver of the vehicle.

[0152] For example, if the vehicle is a truck, the police officer may stop the truck in order to check the tachograph of the truck and file a ticket if necessary.

[0153] Naturally, many modifications can be made to the embodiments of the invention described above without departing from the scope of the present invention.

Claims

1. Method for checking an average speed of a vehicle in a section of road, **characterized in that** the method comprises the steps of:

   - capturing an image of a number plate of the vehicle,
   - executing an automatic number plate recognition algorithm in order to extract figures and characters of the number plate,
   - memorizing the captured image together with the time of the image capture, the extracted figures and characters of the number plate and a location at which the image capture is performed,
   - checking if the extracted figures and characters of the number plate are memorized two times,
   - obtaining a road shortest path between the locations of the two image captures,
   - determining information representative of a theoretical maximum speed between the two locations,
   - determining information representative of an average speed of the vehicle between the two locations,
   - checking if information representative of the average speed of the vehicle between the two locations is upper than the information representative of a theoretical maximum speed limitation between the two locations,
   - notifying, through a display of an enforcement vehicle to an occupant of the enforcement vehicle, information representative of the average speed of the vehicle together with the information representative of the theoretical maximum speed between the two locations.

2. Method according to claim 1, **characterized in that** the capturing of the image of the number plate of the vehicle is performed by the enforcement vehicle that is moving.

3. Method according to claim 2, **characterized in that** the capturing of the image is performed when the moving enforcement vehicle overtakes or is overtaken by the vehicle.

4. Method according to claim 3, **characterized in that** the capturing of the image is performed when the moving enforcement vehicle is at a predetermined distance of the vehicle.

5. Method according to any of the claims 2 to 4, **characterized in that** the capturing, the automatic number plate recognition algorithm execution, the memorizing, the checking, the determining and the notifying are performed by a mobile automatic number plate recognition system comprised in the moving enforcement vehicle.

6. Method according to any of the claims 2 to 5, **characterized in that** the capturing, the automatic number plate recognition algorithm execution, the memorizing are performed by a mobile automatic number plate recognition system comprised in the moving enforcement vehicle, the checking, the determining are performed by a server, the notifying is performed by the mobile automatic number plate recognition system comprised in the moving enforcement vehicle and **in that** the mobile automatic number plate recognition system transfers to the server a message comprising the output of the extracted figures and characters of the number plate, the time and the position and the server transfers to the mobile automatic number plate recognition system comprised in the moving enforcement vehicle, a message comprising the average speed of the vehicle together with the average speed limitation between the two locations.

7. Method according to claim 6, **characterized in that** the figures and characters memorized two times are received from different mobile automatic number plate recognition systems comprised in the different moving enforcement vehicles.

8. Method according to claim 6, **characterized in that** the figures and characters memorized the first times are received from a fixed speed enforcement camera or from a drone.

9. Method according to claim 1, **characterized in that** the capturing of the image of the number plate of the vehicle is performed by another enforcement vehicle that is moving.

10. Method according to claim 9, **characterized in that** the capturing of the image, by the other enforcement vehicle that is moving, is performed when the other moving enforcement vehicle overtakes or is overtaken by the vehicle or when the other moving enforcement vehicle is at a predetermined distance of the vehicle.

11. Method according to claims 9 or 10, **characterized in that** the automatic number plate recognition algorithm execution and the memorizing are performed by an automatic number plate recognition system comprised in the other mobile enforcement vehicle that is moving, the checking and the determining are performed by a server, the notifying is performed by the mobile automatic number plate recognition system comprised in the enforcement vehicle and **in that** the automatic number plate recognition system comprised in the other mobile enforcement vehicle transfers to the server a message comprising the output of the extracted figures and characters of the number plate, the time and the position and the server transfers to the automatic number plate recognition system comprised in the enforcement vehicle, a message comprising the average speed of the vehicle together with the average speed limitation between the two locations.

12. Method according to claim 11, **characterized in that** the figures and characters memorized the first time are received from a fixed speed enforcement camera or from a drone.

13. System for checking an average speed of a vehicle in a section of road, **characterized in that** the system comprises:

- means for capturing an image of a number plate of the vehicle,
- means for executing an automatic number plate recognition algorithm in order to extract figures and characters of the number plate,
- means for memorizing the captured image together with the time of the image capture, the extracted figures and characters of the number plate and a location at which the image capture is performed,
- means for checking if the extracted figures and characters of the number plate are memorized two times,
- means for obtaining a road shortest path between the locations of the two image captures,
- means for determining information representative of a theoretical maximum speed between the two locations,
- means for determining information representative of an average speed of the vehicle between the two locations,
- means for checking if information representative of the average speed of the vehicle between the two locations is upper than the information representative of a theoretical maximum speed limitation between the two locations,
- means for notifying, through a display of an enforcement vehicle to an occupant of the enforcement vehicle, information representative of the average speed of the vehicle together with the information representative of the theoretical maximum speed between the two locations.

14. Computer program which can be directly loadable into a programmable device, comprising instructions or portions of code for implementing the steps of the method according to claims 1 to 12, when said computer program is executed on a programmable device.

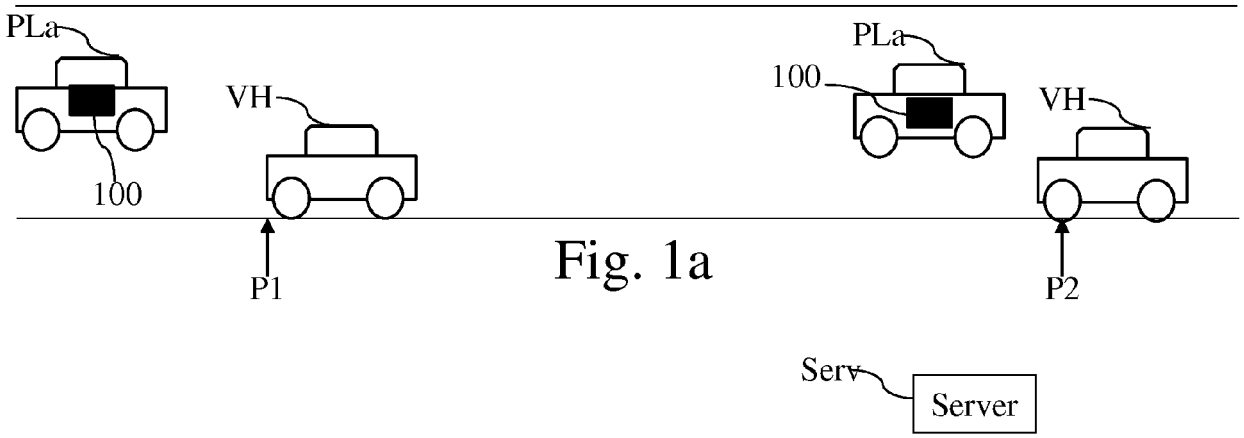

Fig. 1a

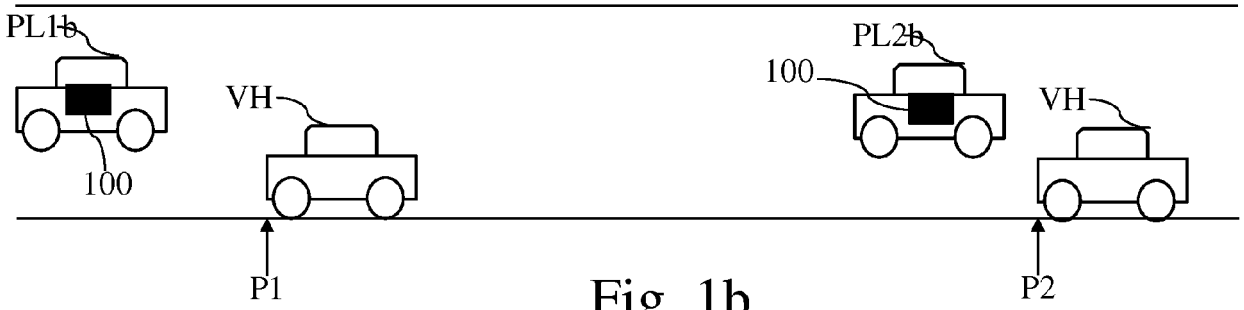

Fig. 1b

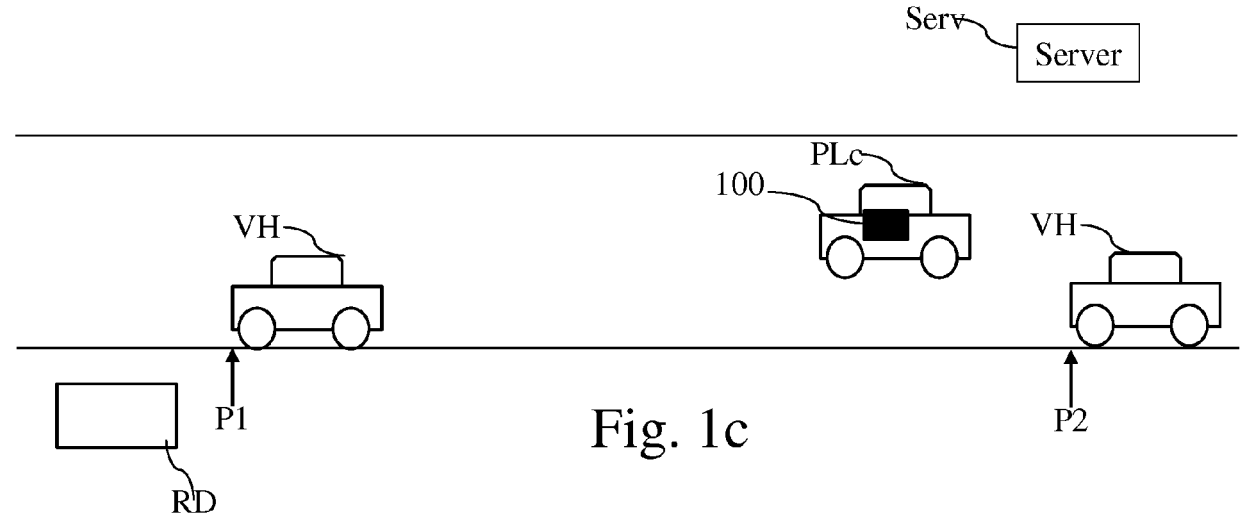

Fig. 1c

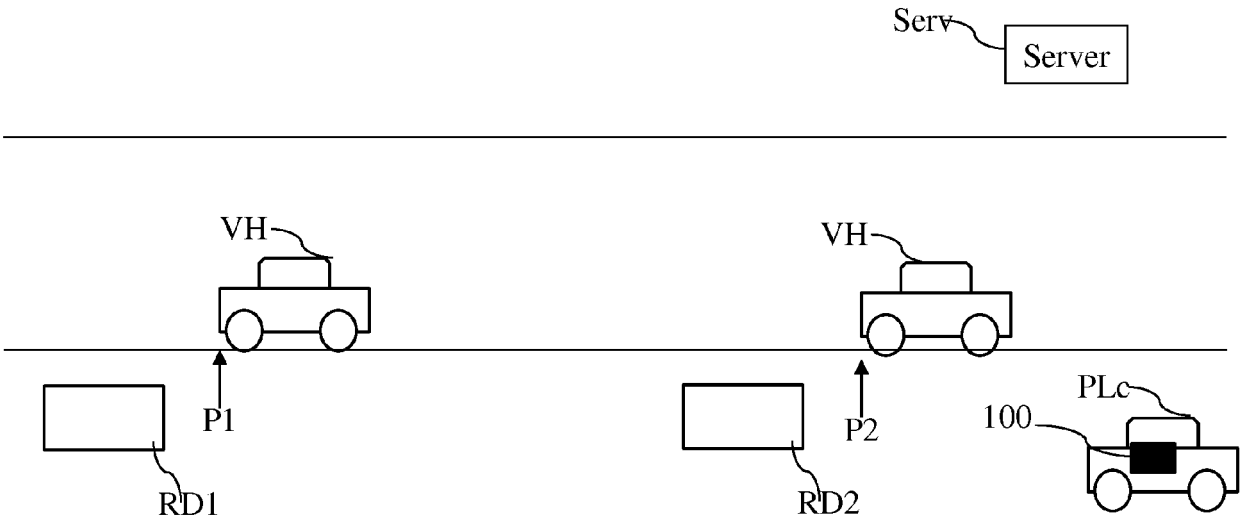

Fig. 1d

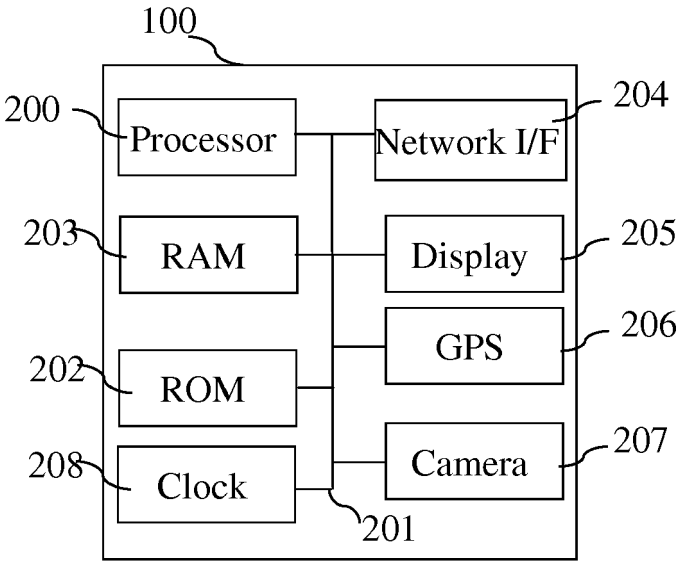
100
200
Processor
Network I/F
204
203
RAM
Display
205
GPS
206
202
ROM
208
Clock
Camera
207
201

Fig. 2

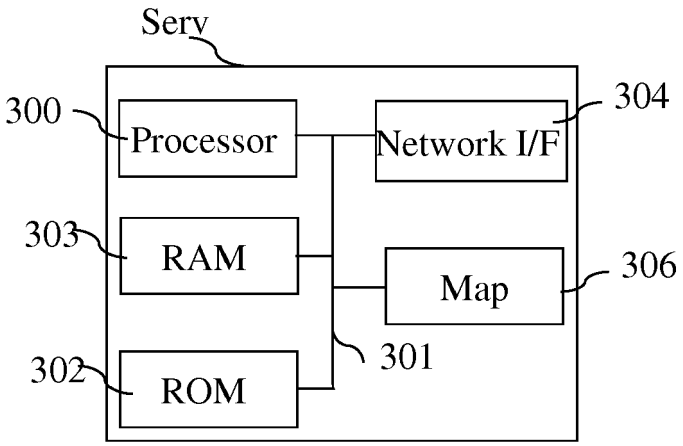
Sery
300
Processor
Network I/F
304
303
RAM
Map
306
301
302
ROM

Fig. 3

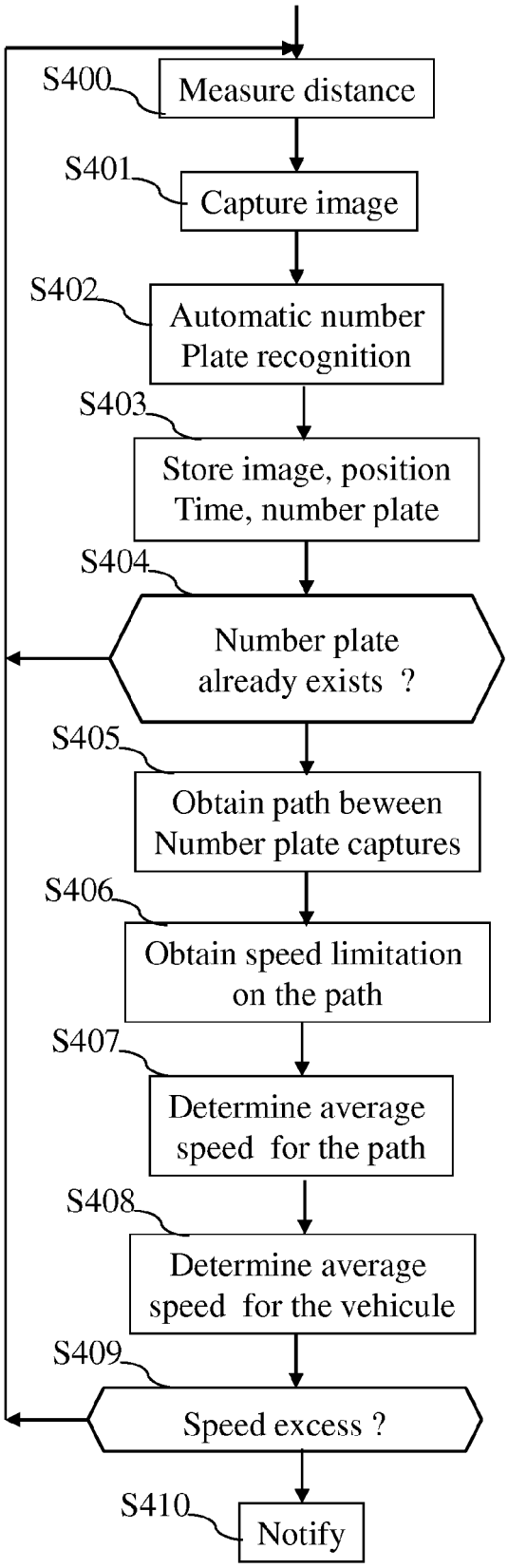
S400
Measure distance
S401
Capture image
S402
Automatic number
Plate recognition
S403
Store image, position
Time, number plate
S404
Number plate
already exists ?
S405
Obtain path beween
Number plate captures
S406
Obtain speed limitation
on the path
S407
Determine average
speed for the path
S408
Determine average
speed for the vehicule
S409
Speed excess ?
S410
Notify

Fig. 4

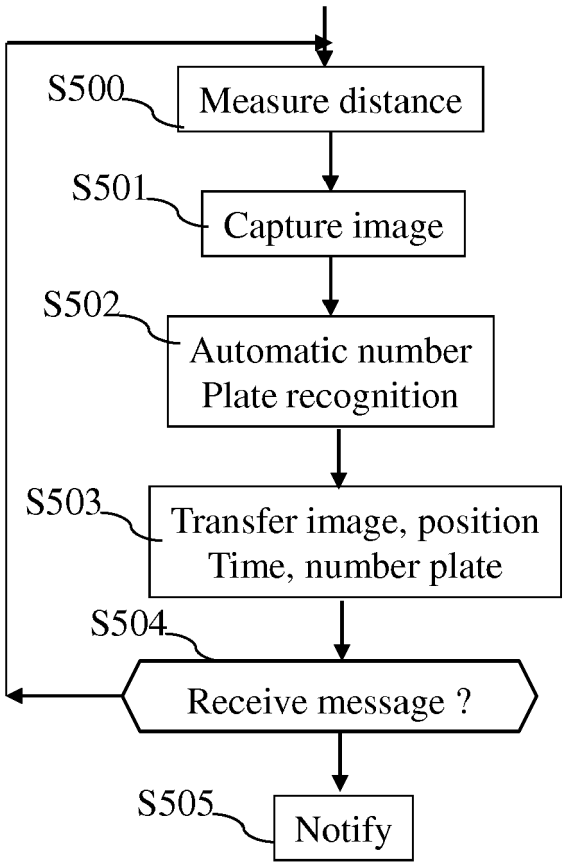
S500
Measure distance
S501
Capture image
S502
Automatic number
Plate recognition
S503
Transfer image, position
Time, number plate
S504
Receive message ?
S505
Notify

Fig. 5

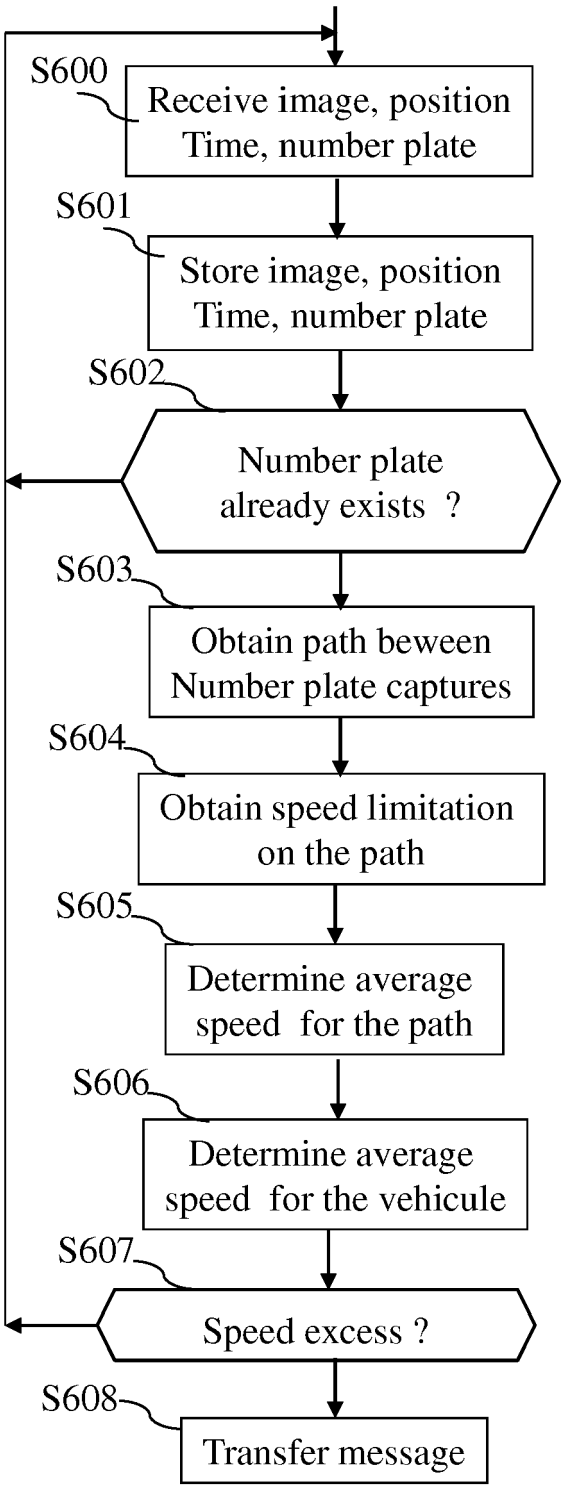
S600
Receive image, position
Time, number plate
S601
Store image, position
Time, number plate
S602
Number plate
already exists ?
S603
Obtain path beween
Number plate captures
S604
Obtain speed limitation
on the path
S605
Determine average
speed for the path
S606
Determine average
speed for the vehicule
S607
Speed excess ?
S608
Transfer message

Fig. 6

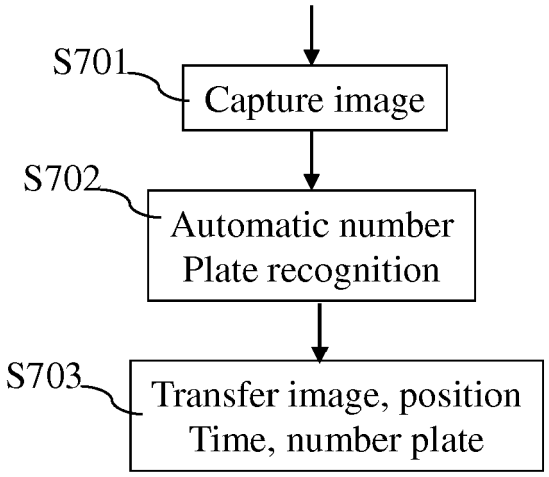
S701
Capture image
S702
Automatic number
Plate recognition
S703
Transfer image, position
Time, number plate

Fig. 7a

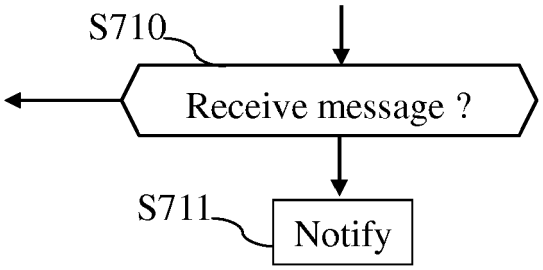
S710
Receive message ?
S711
Notify

Fig. 7b

Europäisches Patentamt
European Patent Office
Office européen des brevets

EUROPEAN SEARCH REPORT

Application Number
EP 17 30 6707

DOCUMENTS CONSIDERED TO BE RELEVANT

Category	Citation of document with indication, where appropriate, of relevant passages	Relevant to claim	CLASSIFICATION OF THE APPLICATION (IPC)
A	DE 10 2008 028944 A1 (SIEMENS AG [DE]) 31 December 2009 (2009-12-31) * paragraph [0031] * * paragraph [0056] - paragraph [0058] * -----	1-14	INV. G08G1/017 G08G1/054
			TECHNICAL FIELDS SEARCHED (IPC) G08G

The present search report has been drawn up for all claims

Place of search	Date of completion of the search	Examiner
The Hague	3 April 2018	Nanos, Alexander

CATEGORY OF CITED DOCUMENTS

X : particularly relevant if taken alone
Y : particularly relevant if combined with another document of the same category
A : technological background
O : non-written disclosure
P : intermediate document

T : theory or principle underlying the invention
E : earlier patent document, but published on, or after the filing date
D : document cited in the application
L : document cited for other reasons
.....
& : member of the same patent family, corresponding document

1

EPO FORM 1503 03.82 (P04C01)

ANNEX TO THE EUROPEAN SEARCH REPORT ON EUROPEAN PATENT APPLICATION NO. EP 17 30 6707

This annex lists the patent family members relating to the patent documents cited in the above-mentioned European search report.
The members are as contained in the European Patent Office EDP file on
The European Patent Office is in no way liable for these particulars which are merely given for the purpose of information.

03-04-2018

Patent document cited in search report	Publication date	Patent family member(s)	Publication date
DE 102008028944 A1	31-12-2009	NONE	

EPO FORM P0459

For more details about this annex : see Official Journal of the European Patent Office, No. 12/82