(19) Europäisches Patentamt
European Patent Office
Office européen des brevets

(11) EP 2 165 130 B1

(12) **EUROPEAN PATENT SPECIFICATION**

(45) Date of publication and mention of the grant of the patent:
08.08.2018 Bulletin 2018/32

(21) Application number: **07834226.8**

(22) Date of filing: **22.11.2007**

(51) Int Cl.:
F25D 19/00 *(2006.01)* ***F25D 17/06*** *(2006.01)*
F25D 23/06 *(2006.01)*

(86) International application number:
PCT/KR2007/005926

(87) International publication number:
WO 2008/146999 (04.12.2008 Gazette 2008/49)

(54) **REFRIGERATOR**

KÜHLVORRICHTUNG

RÉFRIGÉRATEUR

(84) Designated Contracting States:
AT BE BG CH CY CZ DE DK EE ES FI FR GB GR HU IE IS IT LI LT LU LV MC MT NL PL PT RO SE SI SK TR

(30) Priority: **25.05.2007 KR 20070051092**

(43) Date of publication of application:
24.03.2010 Bulletin 2010/12

(73) Proprietor: **LG Electronics Inc.**
Yeongdeungpo-gu
Seoul
07336 (KR)

(72) Inventors:
- **LIM, Hyoung-Keun**
  Seoul 153-023 (KR)
- **OH, Min-Kyu**
  Seoul 153-023 (KR)
- **SONG, Gye-Young**
  Seoul 153-023 (KR)
- **LEE, Nam-Gyo**
  Seoul 153-023 (KR)
- **KIM, Yang-Gyu**
  Seoul 153-023 (KR)

(74) Representative: **Ter Meer Steinmeister & Partner Patentanwälte mbB**
Nymphenburger Straße 4
80335 München (DE)

(56) References cited:
EP-A2- 0 881 441
KR-A- 20040 056 732
KR-A- 20040 056 733
KR-A- 20040 056 735
KR-A- 20060 017 727
US-A- 3 135 316
US-A- 3 164 970
US-A- 4 614 092

Note: Within nine months of the publication of the mention of the grant of the European patent in the European Patent Bulletin, any person may give notice to the European Patent Office of opposition to that patent, in accordance with the Implementing Regulations. Notice of opposition shall not be deemed to have been filed until the opposition fee has been paid. (Art. 99(1) European Patent Convention).

Printed by Jouve, 75001 PARIS (FR)

Description

TECHNICAL FIELD

[0001] The present invention relates to a refrigerator, and more particularly, to a method for disposing an evaporator and a cool air channel for a refrigerator.

BACKGROUND ART

[0002] A refrigerator is generally provided with a refrigerating cycle composed of a compressor, a condenser, an expansion valve, and an evaporator, and serves to store food items with a fresh state for a long period by supplying cool air generated from the evaporator to a freezing chamber or a chilling chamber.

[0003] US 3 135 316 A relates to a cabinet for storing food, or the like, and more particularly to a system which may be adjusted by the flick of a switch to produce either heating, cooling or freezing temperatures in the cabinet.

[0004] EP 0881441A2 describes a refrigerator including a fresh food compartment, a freezer compartment defined by inner walls and outer case respectively, insulation barrier separating the compartments, and doors closing the compartments. A passageway is mounted in the barrier for providing refrigerated air to fresh food compartment. And a connecting duct is diverged from the passageway in the barrier and extends, in insulated state, forward to the front of the fresh food compartment. A door duct which is communicated with the connecting duct when door closed is mounted in the door. Refrigerated air is provided into the fresh food compartment rearward and forward by the passageway and door duct respectively, thereby cooling the fresh food compartment uniformly and cooling door adjacent portion promptly.

[0005] Recently, a side-by-side refrigerator partitioned into right and left chamber by a partition wall, that is, a freezing chamber and a chilling chamber, is being widely used. As the side-by-side refrigerator becomes larger, a method for separately disposing evaporators at the freezing chamber and the chilling chamber has been disclosed. Here, the two evaporators may be serially connected to one refrigerating cycle, or may be installed at different refrigerating cycles. Also, the two evaporators may be installed at different refrigerating cycles with sharing one compressor. However, in the conventional refrigerator having a plurality of evaporators, the evaporators are respectively installed at a rear surface of the freezing chamber and a rear surface of the chilling chamber. Accordingly, the freezing chamber and the chilling chamber respectively have a small available capacity and a shallow depth, thereby having a limitation in storing food items. Furthermore, since the evaporators are installed at rear surfaces of the freezing chamber and the chilling chamber, cool air is not uniformly distributed to inside of the refrigerator. Accordingly, food received in a front surface of the refrigerator or food received in a door basket may be more easily rotten than food stored in a rear surface of the refrigerator.

DISCLOSURE OF THE INVENTION

[0006] Therefore, it is an object of the present invention to provide a refrigerator capable of increasing available capacities of a freezing chamber and a chilling chamber by properly disposing evaporators.

[0007] It is another object of the present invention to provide a refrigerator capable of uniformly distributing cool air to inside thereof.

[0008] To achieve these objects, there is provided a refrigerator according to claim 1. It is further disclosed: a refrigerator body having an inner space opened/closed by a refrigerator door; a partition wall having one or more first cool air channels therein and having a predetermined thickness and area, for partitioning the inner space of the refrigerator body into two ore more spaces; one or more evaporators installed at the first cool air channels, for generating cool air; and one or more fans installed at the first cool air channel, for supplying cool air generated from the evaporator to the corresponding space.

[0009] It is also disclosed a refrigerator, comprising: a refrigerator body having a freezing chamber that stores food with a frozen state, and a chilling chamber that stored food with a fresh state, the chambers partitioned from each other by a partition wall; a freezing chamber door and a chilling chamber door coupled to the refrigerator body,
for opening and closing the freezing chamber and the chilling chamber; and a freezing chamber evaporator and a chilling chamber evaporator installed at the partition wall of the refrigerator body.

BRIEF DESCRIPTION OF THE DRAWINGS

[0010]

FIG. 1 is a perspective view of a refrigerator, which shows a freezing chamber evaporator and a chilling chamber evaporator installed at upper and lower sides of a partition wall according to one embodiment of the present invention;

FIG. 2 is a sectional view taken along line 'I-I' in FIG. 1;

FIG. 3 is a cross sectional view of a cool air channel of a refrigerator door of the refrigerator of FIG. 1;

FIG. 4 is a perspective view of the refrigerator, which shows the freezing chamber evaporator and the chilling chamber evaporator installed at right and left sides of the partition wall according to another embodiment of the present invention;

FIG. 5 is a sectional view taken along line 'II-II' in FIG. 4;

FIG. 6 is a perspective view of the refrigerator, which shows the freezing chamber evaporator and the chilling chamber evaporator installed at the same position of the partition wall according to still another em-

bodiment of the present invention;

FIG. 7 is a sectional view taken along line 'III-III' in FIG. 6; and

FIG. 8 is a cross sectional view of the refrigerator, which shows the freezing chamber evaporator and the chilling chamber evaporator installed at one cool air channel formed at the partition wall according to yet still another embodiment of the present invention.

MODES FOR CARRYING OUT THE PREFERRED EMBODIMENTS

[0011] Reference will now be made in detail to the preferred embodiments of the present invention, examples of which are illustrated in the accompanying drawings.

[0012] As shown in FIGS. 1 and 2, a refrigerator according to the present invention comprises a refrigerator body 100 having a freezing chamber 110 and a chilling chamber 120 partitioned from each other by a partition wall 130, a freezing chamber door 200 and a chilling chamber door 300 for opening and closing the freezing chamber 110 and the chilling chamber 120 of the refrigerator body 100, and a refrigerant compression type-refrigerating cycle device 400 installed at the refrigerator body 100 and generating cool air.

[0013] As shown in FIG. 1, when the refrigerator is a side-by-side type one, the freezing chamber 110 and the chilling chamber 120 are disposed at right and left sides, and are partitioned from each other by the partition wall 130 vertically disposed between the freezing chamber 110 and the chilling chamber 120. As shown in FIG. 2, at inner right and left sides of the partition wall 130, disposed are a freezing chamber channel 131 (hereinafter, will be referred to as a 'first refrigerator channel') and a chilling chamber channel 132 (hereinafter, a 'second refrigerator channel') respectively having a freezing chamber evaporator (hereinafter, a 'first evaporator') 440 and a chilling chamber evaporator (hereinafter, a 'second evaporator') 460 thereby implementing a first cool air channel. One or more freezing chamber cool air outlet (hereinafter, a 'first refrigerator outlet) 131a and one or more chilling chamber cool air outlet (hereinafter, a 'second refrigerator outlet') 132a are formed along each height direction of the first refrigerator channel 131 and the second refrigerator channel 132.

[0014] As shown in FIG. 3, at a front side of the partition wall 130, disposed are a freezing chamber door guide channel (hereinafter, a 'first guide channel') 131b and a chilling chamber door guide channel (hereinafter, a 'second guide channel') 132b respectively for guiding cool air inside the first refrigerator channel 131 and the second refrigerator channel 132 to a cool air channel for a freezing chamber door 200 (hereinafter, a 'first door channel') 211 and a cool air channel for a chilling chamber door 300 (hereinafter, a 'second door channel') 311.

[0015] As shown in FIG. 3, the first door channel 211 and the second door channel 311 are respectively formed at the freezing chamber door 200 and the chilling chamber door 300 so as to be communicated with the first guide channel 131b and the second guide channel 132b of the partition wall 130. One or more first door outlets 211a and one or more second door outlets 311a are formed at the first door channel 211 and the second door channel 311 in each height direction.

[0016] When cool air inlets (not shown) are formed at the freezing chamber 110 and the chilling chamber 120 of the refrigerator body 100, cool air can be introduced into the first and second door channels 211 and 311 through the cool air inlets even if additional cool air inlets are not provided at the freezing chamber door 200 and the chilling chamber door 300.

[0017] The refrigerating cycle device 400 includes one compressor 410; one condenser 420 connected to the compressor 410, for condensing a refrigerant discharged from the compressor 410 with a high temperature and a high pressure; a freezing chamber expansion valve (hereinafter, a 'first expansion valve') 430 installed at a freezing chamber refrigerating cycle (hereinafter, a 'first cycle' C1) diverged from an exit of the condenser 420, for expanding the refrigerant with a high temperature and a high pressure in correspondence with a preset temperature of the freezing chamber 110; a first evaporator 440 connected to the first expansion valve 430 and installed at the first refrigerator channel 131, for evaporating a refrigerant of a low temperature and a low pressure; a chilling chamber expansion valve (hereinafter, a 'second expansion valve') 450 installed at a chilling chamber refrigerating cycle (hereinafter, a 'second cycle' C2) diverged from an exit of the condenser 420, for expanding a refrigerant in correspondence with a preset temperature of the chilling chamber 120; a second evaporator 460 connected to the second expansion valve 450 and installed at the second refrigerator channel 132, for evaporating a refrigerant. At each one side of the first evaporator 440 and the second evaporator 460, a freezing chamber fan (hereinafter, a 'first fan') 470 and a chilling chamber fan (hereinafter, a 'second fan') 480 for blowing cool air cooled through the first and second evaporators 440 and 460 to the freezing chamber 110 and the chilling chamber 120 are respectively formed at the first refrigerator channel 131 and the second refrigerator channel 132 of the partition wall 130.

[0018] A refrigerant conversion valve 490 for selectively circulating a refrigerant having passed through the condenser 420 to one of the first cycle (C1) and the second cycle (C2) is installed at the exit of the condenser 420. The refrigerant conversion valve 490 may be implemented as a 3-way valve installed at a diverge point between the first cycle (C1) and the second cycle (C2), or as a 2-way valve individually installed at the first cycle (C1) and the second cycle (C2). Here, the 3-way is operated to totally close the condenser 420 and the first and second cycles (C1 and C2), or to connect the condenser 420 and the first cycle (C1) with each other, or to connect the condenser 420 and the second cycle (C2) with each other when the refrigerator is driven.

[0019] As shown in FIGS. 1 and 2, the first and second evaporators 440 and 460 may be installed on a nearly same plane in the partition wall 130. For example, the first and second evaporators 440 and 460 may be installed at the same depth so as to be separated from each other by a certain distance therebetween at upper and lower sides of the partition wall 130. As shown in FIGS. 4 and 5, the first and second evaporators 440 and 460 may be installed at the same height so as to be separated from each other by a certain distance therebetween in a depth direction. As shown in FIGS. 6 and 7, the first and second evaporators 440 and 460 may be installed at the same height and at the same depth. When the first and second evaporators 440 and 460 are disposed in upper and lower directions, the first and second evaporators 440 and 460 can have a long horizontal length and can be installed at a deep position inside the refrigerator, respectively. When the first and second evaporators 440 and 460 are disposed in a depth direction, the first and second evaporators 440 and 460 can be disposed at upper sides of the refrigerator. When the first and second evaporators 440 and 460 are disposed at the same height and at the same depth, the first and second evaporators 440 and 460 can have a long horizontal length and can be installed at an upper side of the refrigerator, respectively.

[0020] Unexplained reference numerals 220 and 320 denote door baskets.

[0021] Operation and effects of the refrigerator according to the present invention will be explained as follows.

[0022] When a load is generated as food items are received in the freezing chamber 110 or the chilling chamber 120 of the refrigerator, the compressor 410 starts to operate thus to compress a refrigerant. Then, the compressed refrigerant is moved to the first cycle (C1) via the condenser 420, and then is introduced into the compressor 410 via the first expansion valve 430 and the first evaporator 440. The compressed refrigerant is moved to the second cycle (C2) via the condenser 420, and then is introduced into the compressor 410 via the second expansion valve 450 and the second evaporator 460. These processes are repeatedly performed. Here, cool air generated from the first evaporator 440 and the second evaporator 460 may be supplied to the freezing chamber 110 by the first fan 470 through the first refrigerator channel 131 and the first refrigerator outlet 131a, or may be supplied to the chilling chamber 120 by the second fan 480 through the second refrigerator channel 132 and the second refrigerator outlet 132a. Accordingly, food items stored in the freezing chamber 110 and the chilling chamber 120 can be maintained with a frozen status or a cool status.

[0023] Cool air inside the first and second refrigerator channels 131, 132 is introduced into the first and second door channels 211, 311 provided at the freezing chamber door 200 and the chilling chamber door 300 through the first and second guide channels 131b, 132b communicated with each side surface of the first and second refrigerator channels 131, 132. Also, the cool air is directly supplied to the door baskets 220, 320 of the freezing chamber door 200 and the chilling chamber door 300 through the first and second door outlets 211a, 311a. Accordingly, food or beverage items stored in the door baskets 220, 320 can be freshly maintained with a frozen state or a cool state.

[0024] In order to receive a large amount of food items and to store food items with a fresh state by smoothly supplying cool air, the freezing chamber 110 and the chilling chamber 120 have to have large available capacities. However, when the first and second evaporators are installed at rear surfaces of the freezing chamber 110 and the chilling chamber 120, the available capacities of the freezing chamber and the chilling chamber are decreased. To solve the problem, in the present invention, the first and second evaporators 440, 460 are installed inside the partition wall 130 that partitions the freezing chamber 110 and the chilling chamber 120 from each other. Since additional spaces for installing the first and second evaporators 440, 460 are not required at rear surfaces of the freezing chamber 110 and the chilling chamber 120, the freezing chamber 110 and the chilling chamber can have a deep depth and a large available capacity, respectively. Furthermore, cool air generated from the first and second evaporators 440, 460 can be directly supplied to the door baskets 220, 320 of the freezing chamber door 200 and the chilling chamber door 300 through the first and second door channels 211, 311 formed at the freezing chamber door 200 and the chilling chamber door 300. In this case, each temperature difference between the freezing chamber 110 and the door basket 220, and between the chilling chamber 120 and the door basket 320 can be solved, thereby freshly storing food or beverage items received in the door baskets 220, 320.

[0025] The refrigerator of the present invention may have other embodiment.

[0026] As shown in FIG. 8, one refrigerator channel 133 having a first cool air channel may be formed in the partition wall 130. A first refrigerator outlet 133a and a second refrigerator outlet 133b may be formed at both sides of the refrigerator channel 133, that is, a side surface of the freezing chamber and a side surface of the chilling chamber. Here, one or more evaporators 440, 460 may be installed at the one refrigerator channel 133. And, the freezing chamber fan 470 and the chilling chamber fan 480 may be installed at each periphery of the first and second refrigerator outlets 133a, 133b. Although not shown, one fan (not shown) may be installed at rear sides of the evaporators 440, 460, thereby guiding cool air discharged from the fan to be respectively supplied to the freezing chamber 110 and the chilling chamber 120. Here, since the evaporators 440, 460 are installed at the partition wall 130 positioned at a side surface of the refrigerator not a rear surface of the refrigerator, an available capacity inside the refrigerator can be increased. Furthermore, since the first and second door channels

211, 311 and the first and second door outlets 211a, 311a are respectively connected to the freezing chamber door 200 and the chilling chamber door 300, food items received in the first and second door baskets 220, 320 can be stored with a fresh state. The refrigerator according to another embodiment of the present invention has the same effects and configurations as the aforementioned refrigerator, and thus its detailed explanation will be omitted.

[0027] The refrigerator according to the present invention has the following advantages.

[0028] Since the freezing chamber evaporator and the chilling chamber evaporator are installed at an inner side of the partition wall that partitions inside of the refrigerator into the freezing chamber and the chilling chamber, each depth of the freezing chamber and the chilling chamber becomes deep. Accordingly, each available capacity of the freezing chamber and the chilling chamber can be increased, and thus a large amount of food items can be stored in the refrigerator with a fresh state.

[0029] Furthermore, the cool air channel is connected to the freezing chamber door and the chilling chamber door, thereby not causing a temperature difference between the refrigerator body and the door basket. Accordingly, food items or beverage items received in the door basket can be stored with a fresh state.

[0030] The refrigerator according to the present invention can be applied not only to a side-by-side type, but also to any refrigerator having a partition wall therein.

Claims

1. A refrigerator, comprising:

a refrigerator body (100) having inner spaces (110, 120) opened/closed by refrigerator doors (200, 300);
a partition wall (130) having a first cool air channel therein and having a predetermined thickness and area, for partitioning the inner space of the refrigerator body (100) into the inner spaces (110, 120);
evaporators (440, 460) installed at the first cool air channel of the partition wall (130), for generating cool air; and
fans (470, 480) installed at both sides of the first cool air channel, for supplying cool air generated from the evaporator (440, 460) to the corresponding spaces,
wherein the first cool air channel is implemented by first and second refrigerator channels (131, 132), respectively, wherein the first and second refrigerator channels (131, 132) comprise first and second refrigerator outlets (131a, 132a), which are in communication with the spaces (110, 120) inside the refrigerator body (100),
characterised in that
the first and second refrigerator channels (131, 132) further comprise a first guide channel (131b) and a second guide channel (132b) which are respectively disposed at a front side of the partition wall (130),
a first door channel (211) and a second door channel (311) are respectively formed at the refrigerator doors so as to be respectively in communication with the first and second guide channels (131b, 132b), and
door outlets (211a, 311a) for supplying cool air guided through the first and second door channels (211, 311) to the respective spaces (110, 120) are respectively formed at the first and the second door channels (211, 311).

2. The refrigerator of claims 1, wherein one or more door baskets (210, 230) are installed at an inner wall surface of the refrigerator door (200), and the cool air outlets (211a, 311a) are respectively formed at each of the door baskets (210, 310) so as to be in communication therewith.

Patentansprüche

1. Kühlschrank, der Folgendes umfasst:

einen Kühlschrankkörper (100), der Innenräume (110, 120) aufweist, die durch Kühlschranktüren (200, 300) geöffnet bzw. geschlossen werden;
eine Trennwand (130), die einen ersten Kanal für kalte Luft aufweist und die eine vorgegebene Dicke und Fläche aufweist, zum Trennen des Innenraums des Kühlschrankkörpers (100) in die Innenräume (110, 120);
Verdampfer (440, 460), die bei dem ersten Kanal für kalte Luft der Trennwand (130) eingebaut sind, um kalte Luft zu erzeugen; und
Gebläse (470, 480), die an beiden Seiten des ersten Kanals für kalte Luft eingebaut sind, um kalte Luft, die von dem Verdampfer (440, 460) erzeugt wird, den entsprechenden Räumen zuzuführen,
wobei der erste Kanal für kalte Luft jeweils durch einen ersten und einen zweiten Kühlschrankkanal (131, 132) realisiert wird, wobei der erste und der zweite Kühlschrankkanal (131, 132) einen ersten und einen zweiten Kühlschrankauslass (131a, 132a) umfassen, die mit den Räumen (110, 120) im Inneren des Kühlschrankkörpers (100) in Kommunikation sind,
dadurch gekennzeichnet, dass
der erste und der zweite Kühlschrankkanal (131, 132) ferner einen ersten Führungskanal (131b) und einen zweiten Führungskanal (132b) umfassen, die jeweils an einer vorderen Seite der

Trennwand (130) angeordnet sind,
ein erster Türkanal (211) und ein zweiter Türkanal (311) jeweils an den Kühlschranktüren so ausgebildet sind, dass sie mit dem ersten bzw. dem zweiten Führungskanal (131b, 132b) in Kommunikation sind, und
Türauslässe (211a, 311a) zum Zuführen von kalter Luft, die durch den ersten und den zweiten Türkanal (211, 311) zu den jeweiligen Räumen (110, 120) geführt wird, bei dem ersten bzw. dem zweiten Türkanal (211, 311) ausgebildet sind.

2. Kühlschrank nach Anspruch 1, wobei ein oder mehrere Türkörbe (210, 230) an einer Innenwandfläche der Kühlschranktür (200) eingebaut sind und wobei die Auslässe (211a, 311a) für kalte Luft bei jedem der Türkörbe (210, 310) jeweils so ausgebildet sind, dass sie damit in Kommunikation sind.

Revendications

1. Réfrigérateur, comprenant :

un corps de réfrigérateur (100) ayant des espaces intérieurs (110 ; 120) ouverts/fermés par des portes de réfrigérateur (200, 300) ;
une paroi de séparation (130) ayant un premier canal d'air frais en elle-même et ayant une épaisseur et une aire prédéterminées, pour séparer l'espace intérieur du corps de réfrigérateur (100) pour former les espaces intérieurs (110, 120) ;
des évaporateurs (440, 460) installés sur le premier canal d'air frais de la paroi de séparation (130) pour générer de l'air frais ; et
des ventilateurs (470, 480) installés sur les deux côtés du premier canal d'air frais pour amener l'air frais généré par l'évaporateur (440, 460) aux espaces correspondants,
dans lequel le premier canal d'air frais est réalisé par des premier et deuxième canaux de réfrigérateur (131, 132), respectivement, dans lequel les premier et deuxième canaux de réfrigérateur (131, 132) comprennent des première et deuxième sorties de réfrigérateur (131a, 132a) qui sont en communication avec les espaces (110, 120) à l'intérieur du corps de réfrigérateur (100),
caractérisé en ce que
les premier et deuxième canaux de réfrigérateur (131, 132) comprennent en outre un premier canal de guidage (131b) et un deuxième canal de guidage (132b) qui sont respectivement disposés sur une face frontale de la paroi de séparation (130),
un premier canal de porte (211) et un deuxième canal de porte (311) sont respectivement formés sur les portes de réfrigérateur de telle sorte qu'ils sont respectivement en communication avec les premier et deuxième canaux de porte (211, 311), respectivement,
des sorties (211a, 311a) pour fournir de l'air frais guidé à travers les premier et deuxième canaux de porte (211, 311) vers les espaces (110, 120) respectifs sont respectivement formées sur les premier et deuxième canaux de porte (211, 311), respectivement.

2. Réfrigérateur selon la revendication 1, dans lequel un ou plusieurs casiers de porte (210, 230) sont installés sur une surface intérieure de paroi de la porte de réfrigérateur (200), et les sorties d'air frais (211a, 311a) sont respectivement formées sur chacun des casiers de porte (210, 230) de manière à être en communication avec ceux-ci.

[Fig. 1]

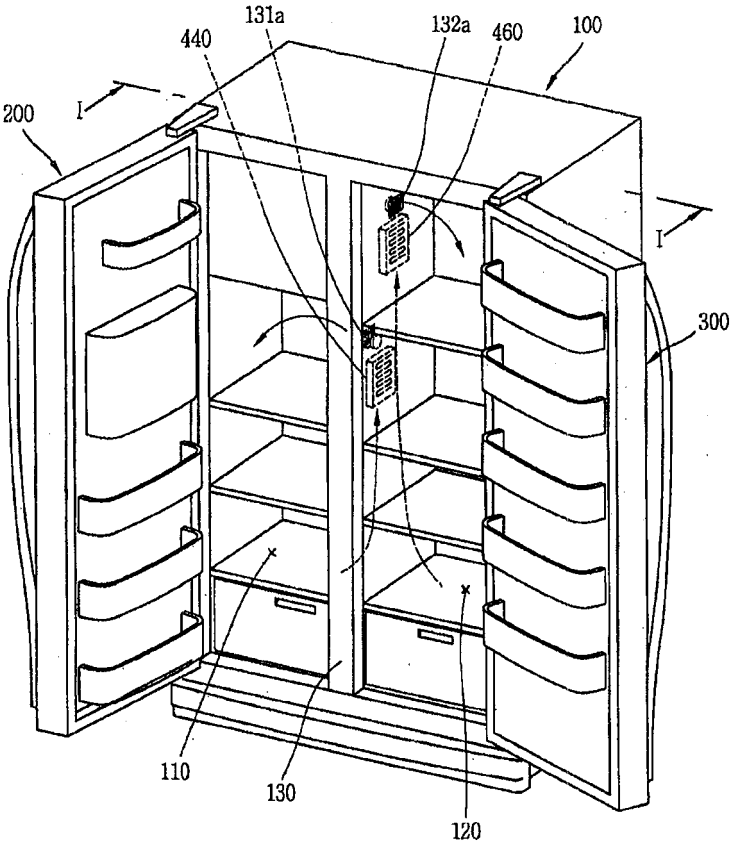

[Fig. 2]

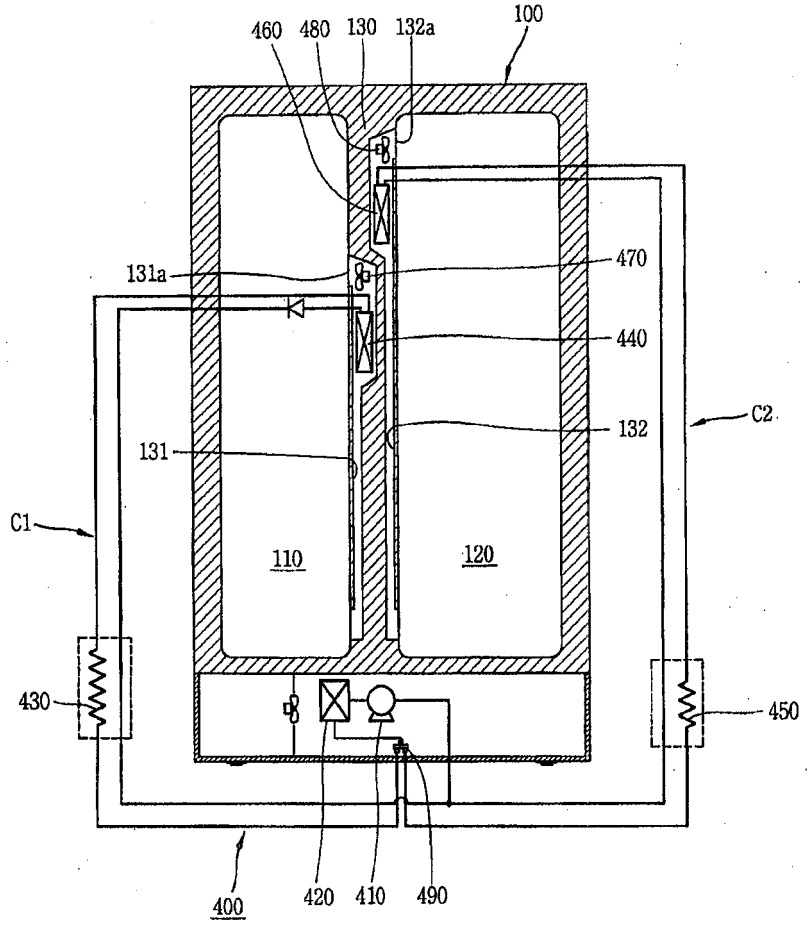
100
460
480
130
132a
470
131a
440
132
C2
131
C1
110
120
430
450
400
420
410
490

[Fig. 3]

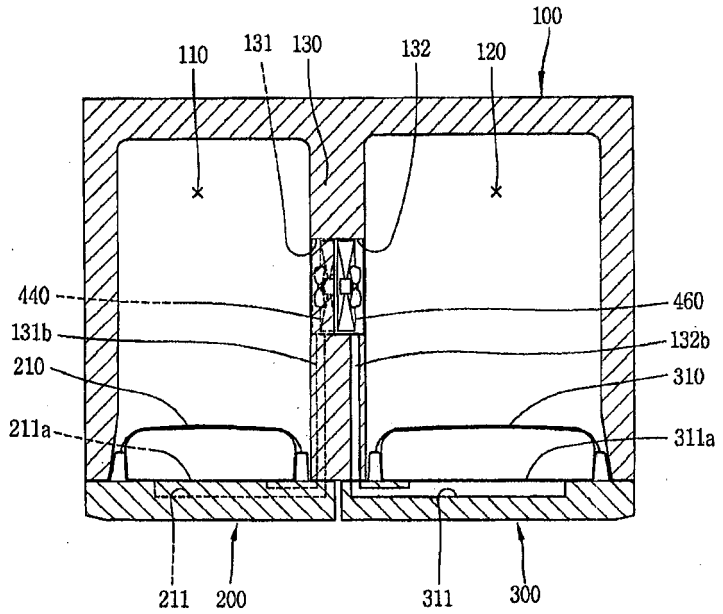
100
110
131
130
132
120
440
460
131b
132b
210
310
211a
311a
211
200
311
300

[Fig. 4]

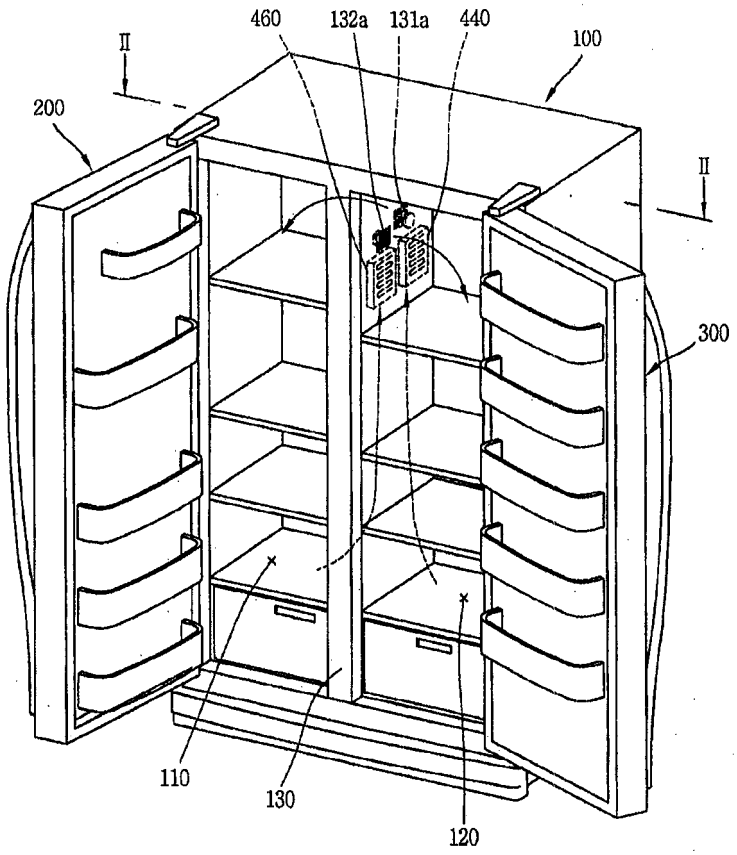
460
132a
131a
440
100
II
200
II
300
110
130
120

[Fig. 5]

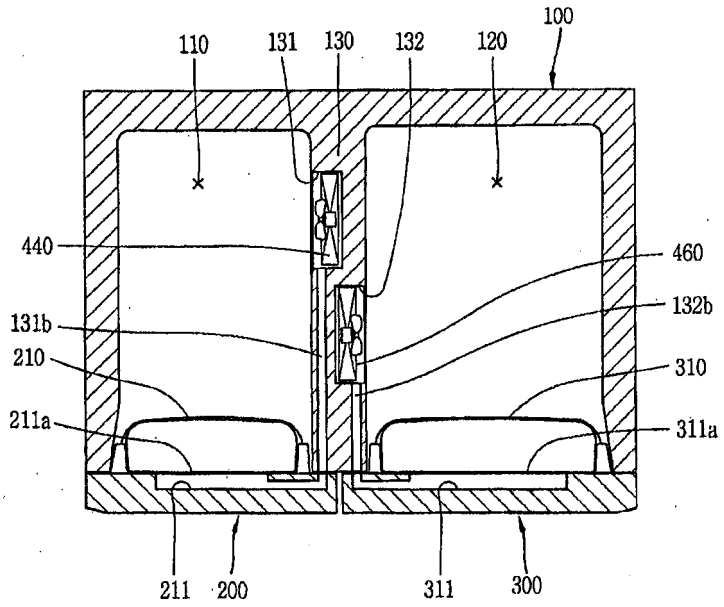
100
110
131
130
132
120
440
460
131b
132b
210
310
211a
311a
211
200
311
300

[Fig. 6]

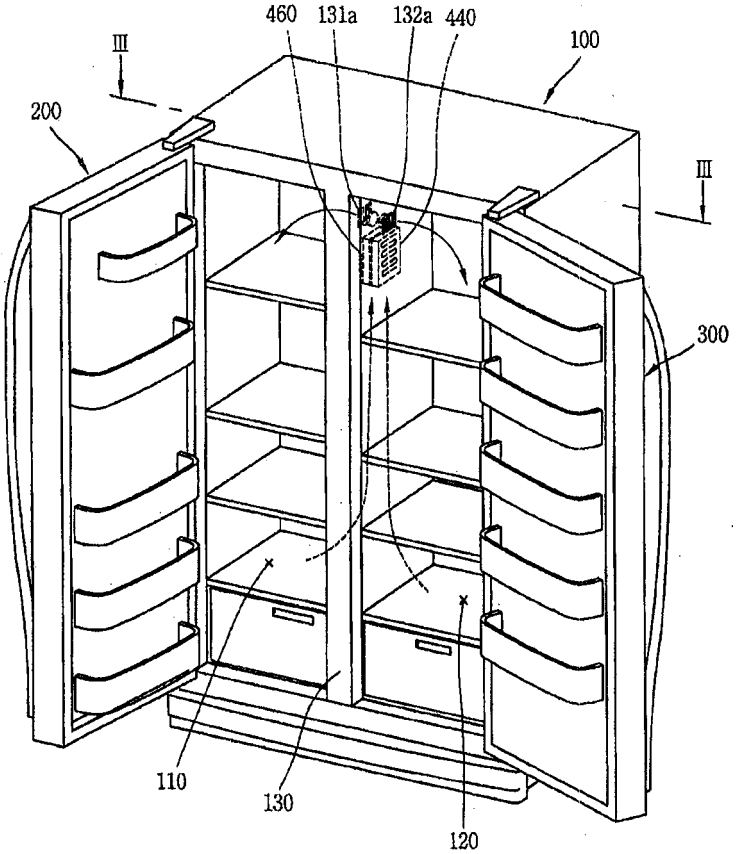
460
131a
132a
440
100
III
200
III
300
110
130
120

[Fig. 7]

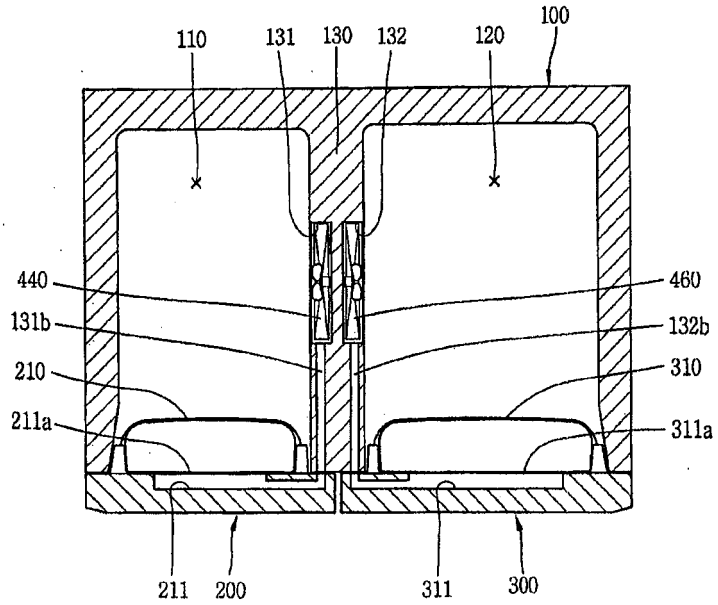
110
131
130
132
120
100
440
460
131b
132b
210
310
211a
311a
211
200
311
300

[Fig. 8]

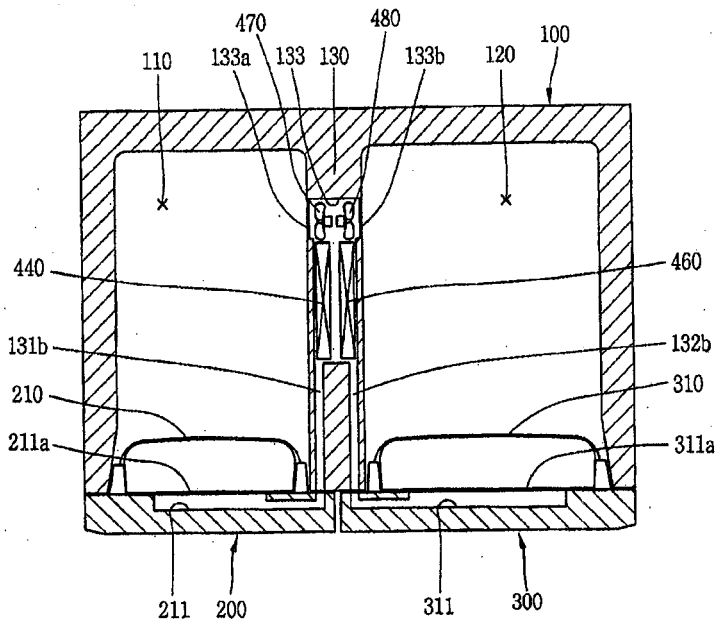
470
480
100
110
133a
133
130
133b
120
440
460
131b
132b
210
310
211a
311a
211
200
311
300

REFERENCES CITED IN THE DESCRIPTION

This list of references cited by the applicant is for the reader's convenience only. It does not form part of the European patent document. Even though great care has been taken in compiling the references, errors or omissions cannot be excluded and the EPO disclaims all liability in this regard.

Patent documents cited in the description

- US 3135316 A **[0003]**
- EP 0881441 A2 **[0004]**