(19) Europäisches Patentamt
European Patent Office
Office européen des brevets

(11) EP 3 357 565 A1

(12) EUROPEAN PATENT APPLICATION
published in accordance with Art. 153(4) EPC

(43) Date of publication:
08.08.2018 Bulletin 2018/32

(21) Application number: **16850731.7**

(22) Date of filing: **01.06.2016**

(51) Int Cl.:
B01F 3/04 *(2006.01)*
B01F 15/02 *(2006.01)*
E03D 11/02 *(2006.01)*
B01F 7/16 *(2006.01)*
E03D 9/02 *(2006.01)*

(86) International application number:
PCT/JP2016/066153

(87) International publication number:
WO 2017/056554 (06.04.2017 Gazette 2017/14)

(84) Designated Contracting States:
AL AT BE BG CH CY CZ DE DK EE ES FI FR GB GR HR HU IE IS IT LI LT LU LV MC MK MT NL NO PL PT RO RS SE SI SK SM TR
Designated Extension States:
BA ME
Designated Validation States:
MA MD

(30) Priority: **30.09.2015 JP 2015193435**

(71) Applicant: **LIXIL Corporation**
Koto-ku
Tokyo 136-8535 (JP)

(72) Inventors:
- **SHIMIZU, Koji**
  Tokyo 136-8535 (JP)
- **HAIDA, Shuhei**
  Tokyo 136-8535 (JP)
- **WATARI, Kojiro**
  Tokyo 136-8535 (JP)

(74) Representative: **Algemeen Octrooi- en Merkenbureau B.V.**
P.O. Box 645
5600 AP Eindhoven (NL)

(54) BUBBLE GENERATING DEVICE AND FLUSHING TOILET PROVIDED WITH SAME

(57) An ejector 116 (a mixing part) produces bubble water. A water flowing part 126 is formed on the downstream side of the ejector 116. The water flowing part 126 may include a detergent port 122 through which detergent is injected into bubble water. An overflow port 124 communicates with the outside of the water flowing part 126. The ejector 116 allows bubble water to flow down through an outlet 140 into the water flowing part 126. The overflow port 124 is positioned 20 millimeters or more below the outlet 140. Bubble water is mixed with detergent in an agitation part 132 formed below a preliminary part 130. On an inner wall surface of the agitation part 132, a projection 134 is spirally formed. A shear part 128, formed on the downstream side of the water flowing part 126, shears bubbles with an impeller 136.

FIG. 2

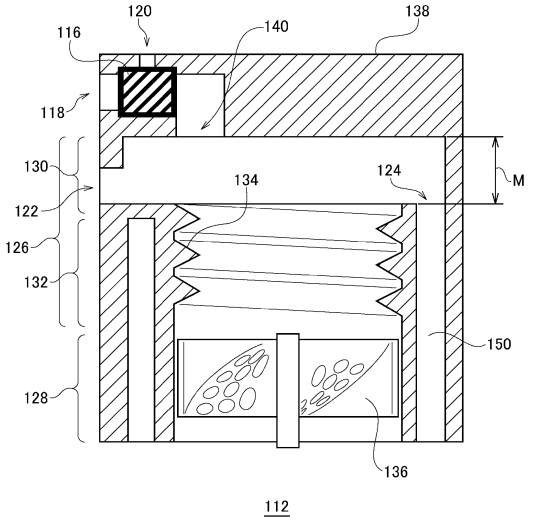

EP 3 357 565 A1

Description

TECHNICAL FIELD

[0001] The present invention relates to a technique for mixing flush water with air and detergent.

BACKGROUND ART

[0002] For a flush toilet, a flushing method is known in which flush water is discharged through one or more discharge ports into the toilet bowl part, and waste is pushed out to a drain pipe by means of the flow of the flush water. Flush water may be sometimes mixed with air (hereinafter, referred to as "bubble water"). As described in Patent Document 1, bubble water has advantages, such as less water splash, less noise, and improved flushing capability (see paragraph [0003] in Patent Document 1). In order to further improve the flushing capability, there is a growing need for a bubble generation device that mixes flush water with detergent, besides air. Hereinafter, bubble water mixed with detergent will be referred to as "detergent bubble water".

PRIOR ART REFERENCE

PATENT DOCUMENT

[0003] [Patent Document 1] Japanese Unexamined Patent Application Publication No. 2002-356898

DISCLOSURE OF INVENTION

PROBLEM(S) TO BE SOLVED BY THE INVENTION

[0004] It is undesirable that bubble water or detergent bubble water made in a bubble generation device flows back to the water supply source. As one countermeasure thereto, there is a method of providing a valve for preventing backflow, but the number of necessary parts is increased, and the structure is likely to complicate. Another countermeasure is to provide, between the water supply part and a water flowing part, a separating portion (an air gap) opened to the atmosphere, and provide an overflow path below the water supply part. However, in this method, it is difficult to mix bubbles into flush water.

[0005] The present invention has been made on the basis of recognition of the aforementioned problem, and a main purpose thereof is to provide techniques for efficiently producing bubble water and preventing backflow of bubble water to the water supply source.

MEANS TO SOLVE THE PROBLEM(S)

[0006] A bubble generation device in an embodiment of the present invention includes: a mixing part that produces bubble water; and a water flowing part formed on the downstream side of the mixing part. The water flowing part further includes an overflow port communicating with the outside of the water flowing part.

[0007] A bubble generation device in another embodiment of the present invention includes a bubble water inlet through which bubble water is injected, and a detergent port through which detergent is injected. An agitation part is formed in a water path of bubble water to mix bubble water and detergent. A projection is formed on an inner wall surface of the agitation part to partially limit the flowing of bubble water.

[0008] A flush toilet in an embodiment of the present invention includes: a toilet device including a toilet bowl part; a discharge port formed on the toilet device, through which flush water is discharged into the toilet bowl part; and a bubble generation device that is mounted on the toilet device and that provides flush water containing detergent to the discharge port.

[0009] The bubble generation device includes: a mixing part that mixes flush water with air to produce bubble water; and a water flowing part formed on the downstream side of the mixing part and including a detergent port through which detergent is injected into bubble water. The water flowing part further includes an overflow port communicating with the outside of the water flowing part.

ADVANTAGEOUS EFFECTS OF INVENTION

[0010] The present invention facilitates efficient production of bubble water and prevention of backflow of bubble water to a water supply pipe.

BRIEF DESCRIPTION OF DRAWINGS

[0011]

Fig. 1 is a front perspective view of a flush toilet;
Fig. 2 is a sectional side view of a bubble generation device;
Fig. 3 is a sectional side view of the bubble generation device when an overflow is occurring;
Fig. 4 is a schematic diagram that shows a method for producing detergent bubble water in an agitation part;
Fig. 5A is a schematic diagram that shows the agitation part in which spiral projections are formed by integral molding;
Fig. 5B is a schematic diagram that shows the agitation part in which a coil spring is provided to form spiral projections; and
Fig. 6 is a side view of a shear part.

MODE FOR CARRYING OUT THE INVENTION

[0012] Fig. 1 is a front perspective view of a flush toilet 100.

[0013] In a toilet body 108 of the flush toilet 100, a toilet bowl part 106 is formed. Also, in the toilet body 108, a

water discharge pipe 110 is embedded. Flush water supplied from a water supply pipe to the toilet body is provided via the water discharge pipe 110 to a first discharge port 102 and a second discharge port 104. Through the first discharge port 102 and the second discharge port 104, flush water is discharged into the toilet bowl part 106. To the toilet body 108, a functional unit (an electrical component), not illustrated, such as a pubic lavage device, to be mounted on the toilet body 108 is added, so that a "toilet device" is configured. The entire or part of the toilet device may be housed in a cabinet installed around the flush toilet 100. The flush tank of the toilet device may be provided externally with respect to the toilet body 108, or may be embedded in a wall.

[0014] Further, a bubble generation device 112 is mounted on the toilet body 108. Being "mounted on" here includes being "embedded in". The bubble generation device 112 receives tap water as flush water via a water supply pipe 114. Also, into the bubble generation device 112, air and detergent is injected (which will be detailed later). The bubble generation device 112 mixes the flush water, air, and detergent to produce detergent bubble water, and supplies the detergent bubble water to the second discharge port 104. Through the second discharge port 104, a mixture of the flush water supplied through the water discharge pipe 110 and the detergent bubble water supplied from the bubble generation device 112 may be discharged, or one of the flush water and the detergent bubble water may be selectively discharged. The bubble generation device 112 may supply the detergent bubble water to both the first discharge port 102 and the second discharge port 104.

[0015] In the following, the bubble generation device 112 will be mainly described. The bubble generation device 112 in the present embodiment has a structure for performing two-step processes of mixing flush water and air to produce bubble water, and then mixing the bubble water with detergent to produce detergent bubble water. Although the bubble generation device 112 of the present embodiment will be described as a device for producing detergent bubble water, the bubble generation device 112 may be configured as a device for supplying bubble water containing no detergent.

[0016] Fig. 2 is a sectional side view of the bubble generation device 112.

[0017] The downward direction in the drawing is the gravity direction (water flowing down direction). The bubble generation device 112 is configured as a single unit, in which an ejector 116 (a mixing part), a water flowing part 126, and a shear part 128 are formed within a casing 138. The casing 138 includes a water supply port 118 through which flush water is provided from public water supply via the water supply pipe 114, an air inlet 120 through which air is naturally drawn in, a detergent port 122 through which detergent is introduced, and an overflow port 124.

[0018] The ejector 116 receives flush water and air through the water supply port 118 and the air inlet 120 and mixes the flush water and air to produce bubble water. The bubble water then flows down through an outlet 140 (a bubble water inlet) toward the water flowing part 126. The water flowing part 126 receives detergent and bubble water through the detergent port 122 and the outlet 140 and mixes the detergent and bubble water to produce detergent bubble water. The shear part 128 shears bubbles in the detergent bubble water using an impeller 136 having multiple holes, so as to reduce and uniform the bubble size. Since fine and uniform bubbles of detergent bubble water have improved cushioning properties, splash of urine or the like can be prevented more easily. Also, since the adhesion with the inner wall surface of the toilet bowl part 106 is improved, the bubbles of the detergent bubble water are likely to remain, thereby improving the flushing capability.

[0019] The water flowing part 126 includes a preliminary part 130 and an agitation part 132. On an inner wall surface of the agitation part 132, projections 134 are formed. In the present embodiment, the projections 134 are formed as spiral projections, such as screw grooves (which will be detailed later in association with Fig. 5A, for example). The overflow port 124 is formed on an upper end part of the agitation part 132. In other words, the preliminary part 130 is a space above the overflow port 124, and the agitation part 132 is a space below the overflow port 124. Since the overflow port 124 is opened to the atmosphere, the preliminary part 130 is also a space opened to the atmosphere. It is also possible to define the agitation part 132 as a space in which the projections 134 are formed, and the preliminary part 130 as a space in which the projections 134 are not formed.

[0020] In order to prevent backflow of flush water or detergent bubble water to the water supply part (the ejector 116 and the water supply port 118, for example), the height (margin M) of the preliminary part 130 is desirably set to 20 millimeters or greater. The margin M in the present embodiment corresponds to a height difference between the overflow port 124 and the outlet 140. Namely, in the present embodiment, the overflow port 124 is formed 20 millimeters or more below the outlet 140.

[0021] The ejector 116 is a known component having a function to mix flush water and air to produce bubble water. Through the water supply port 118, flush water can be supplied at a pressure of tap water. Alternatively, flush water may be pumped into the water supply port 118 by a pump embedded in the flush toilet 100. Through the air inlet 120, air may be naturally drawn in, or air having a pressure higher than an atmospheric pressure may be sent into the air inlet 120 by a pump. In the ejector 116, flush water with a higher pressure can be mixed with air more easily. In the present embodiment, flush water with a sufficient pressure can be provided to the ejector 116, which can efficiently produce bubble water accordingly.

[0022] Fig. 3 is a sectional side view of the bubble generation device 112 when an overflow is occurring.

[0023] The detergent bubble water produced in the ag-

itation part 132 is discharged through the shear part 128. However, if a large amount of bubble water is supplied from the ejector 116 or if bubbling of detergent bubble water is particularly significant in the agitation part 132, the agitation part 132 may be unable to hold the detergent bubble water. In this case, the excess detergent bubble water will flow into the overflow port 124. The overflow port 124 is connected to the toilet bowl part 106 or a sewage pipe, and the excess detergent bubble water is discharged through an overflow path 150. The overflow path 150 may be formed as a pipe included in the bubble generation device 112. By positioning the overflow port 124 lower than the outlet 140, excess detergent bubble water is prevented from entering the ejector 116 after overflowing the agitation part 132.

[0024] Fig. 4 is a schematic diagram that shows a method for producing detergent bubble water in the agitation part 132.

[0025] Through the detergent port 122, detergent 142 is injected. On an inner wall of the agitation part 132, multiple projections 134 are formed. The outlet 140 is formed at a position such that bubble water 144 discharged through the outlet 140 gets contact with the projections 134.

[0026] When the bubble water 144 flows down in the agitation part 132, the flowing of the bubble water 144 is partially limited by the projections 134, so that multiple turbulent flows (vortexes) are generated within the bubble water 144. Meanwhile, since the detergent 142 injected through the detergent port 122 has high viscosity, the detergent 142 slowly flows down along the projections 134 on the wall surface of the agitation part 132. The bubble water 144 flowing while hitting on the projections 134 entrains the detergent 142 flowing along the surfaces of the projections 134, so that the bubble water 144 is mixed with the detergent 142, and detergent bubble water is produced.

[0027] There are two main reasons for providing the projections 134 on the inner wall surface of the water flowing part 126 (agitation part 132), which are as follows.

(1) Agitation effect for the bubble water 144

[0028] Turbulent flows are generated within the bubble water 144. Accordingly, the turbulent flows of the bubble water 144 entrain the detergent 142 flowing along the surfaces of the projections 134, so that the bubble water 144 and the detergent 142 can be efficiently mixed.

(2) Enlargement of the inner wall surface area of the agitation part 132

[0029] With the projections 134, the inner wall surface area of the agitation part 132 is enlarged. By enlarging the inner wall surface area, the contact area between the detergent 142 and the bubble water 144 is also enlarged. In addition, the time from when the detergent 142 enters the agitation part 132 until the detergent 142 is discharged therefrom can be increased. Accordingly, the detergent 142 can be dissolved in the bubble water 144 more easily.

[0030] In the present embodiment, since the detergent port 122 is formed on an upper end part of the agitation part 132, the possibility of the bubble water 144 and the detergent 142 being mixed in the preliminary part 130, besides in the agitation part 132, is not zero. However, since most of the detergent 142 enters the agitation part 132, detergent bubble water is substantially, or mostly, produced within the agitation part 132.

[0031] The detergent 142 may be provided to the detergent port 122 by allowing the detergent 142 to naturally flow down or by pumping the detergent 142 with a pump.

[0032] Fig. 5A is a schematic diagram that shows the agitation part 132 in which spiral projections 134 are formed by integral molding. Fig. 5B is a schematic diagram that shows the agitation part 132 in which a coil spring is provided to form spiral projections 134.

[0033] Various forms of the projections 134 can be considered, such as a plate shape and a hook shape. The projections 134 of the present embodiment are spirally formed on the inner wall surface of the agitation part 132. As shown in Fig. 5A, the spiral projections 134 may be formed as screw grooves on the inner wall of the agitation part 132 by integral molding. Alternatively, the spiral projections 134 may be additionally formed by providing a coil spring 146 in the agitation part 132, as shown in Fig. 5B.

[0034] When the projections 134 are spirally formed, detergent slowly flows down while spirally rotating along the projections 134. Accordingly, the detergent is likely to cover the entire inner wall surface of the water flowing part 126 (agitation part 132), and the residence time of the detergent in the agitation part 132 can be further increased. In addition, a secondary effect of easy production can be obtained in the both cases of Figs. 5A and 5B.

[0035] Fig. 6 is a side view of the shear part 128.

[0036] In the shear part 128 is provided the impeller 136 of which an axial direction is the water flowing direction, and the impeller 136 is rotated by the flowing of detergent bubble water. The impeller 136 includes multiple blades, which each have multiple small holes formed therein. Accordingly, large bubbles in detergent bubble water are fragmented by the impeller 136. Small bubbles can pass through the small holes of the blades. Namely, the impeller 136 also functions as a sieve for bubbles. A motor may be attached to the shaft of the impeller 136 to adjust the rotational speed of the impeller 136. By adjusting the rotational speed of the impeller 136, the bubble size can also be adjusted.

[0037] The rotational speed of the impeller 136 can be adjusted also by adjusting the relative positions of the outlet 140 and the impeller 136. For example, compared to the case where bubble water flows down to a position of which the distance from the shaft of the impeller 136 is R1, the rotational speed of the impeller 136 becomes lower because of a smaller moment when bubble water

flows down to a position of which the distance from the shaft is R2 smaller than R1, i.e., a position closer to the shaft.

[0038] The flush toilet 100, particularly the structure of the bubble generation device 112 mounted on the flush toilet 100 has been mainly described based on an embodiment.

[0039] In the present embodiment, since the ejector 116 is merely a component for mixing tap water and air, a conventional component can be often used as it is. Also, since the bubble generation device 112 collectively includes, within the single casing 138, the ejector 116 for mixing water and air, the water flowing part 126 for mixing bubble water with detergent, and the shear part 128 for adjusting the bubble size of detergent bubble water, the bubble generation device 112 itself can be configured as a single component. Therefore, the bubble generation device 112 can be miniaturized more easily.

[0040] Also, since a valve structure or the like for preventing backflow is not added, the structure of the bubble generation device 112 is simple, so that, as a component, the reliability can be maintained more easily. By providing the preliminary part 130 opened to the atmosphere and discharging excess detergent bubble water through the overflow port 124, backflow to the ejector 116 is prevented.

[0041] Further, since the spiral projections 134 are formed on the inner wall surface of the agitation part 132, the mixing of bubble water and detergent can be promoted.

[0042] The present invention has been described with reference to embodiments. The embodiments are intended to be illustrative only, and it will be obvious to those skilled in the art that various modifications and changes could be developed within the scope of claims of the present invention and that such modifications and changes also fall within the scope of claims of the present invention. Therefore, the description in the present specification and the drawings should be regarded as exemplary rather than limitative.

[0043] Although the detergent port 122 opens on the preliminary part 130 in the present embodiment, the detergent port 122 may open on the agitation part 132. Also, the detergent port 122 may open on both the preliminary part 130 and the agitation part 132. Similarly, the overflow port 124 may be formed at two or more positions. Also in this case, it is desirable to provide a margin of 20 millimeters or more between the overflow port 124 at the highest position and the outlet 140.

[0044] According to the description above, the following inventions can be found.

[0045] A bubble generation device in an embodiment of the present invention includes: a mixing part that produces bubble water; and a water flowing part formed on the downstream side of the mixing part. The water flowing part further includes an overflow port communicating with the outside of the water flowing part.

[0046] In the mixing part, bubble water is efficiently produced using a strong pressure of tap water, for example. Thereafter, the bubble water may be mixed with detergent. Since excess bubble water or detergent bubble water is discharged through the overflow port, backflow of bubble water or detergent bubble water to the mixing part, or the water supply source, can be prevented more easily.

[0047] The water flowing part may further include a detergent port through which detergent is injected into bubble water.

[0048] The mixing part may be formed so that bubble water flows down through an outlet into the water flowing part. The overflow port may be positioned lower than the outlet and may be opened to the atmosphere.

[0049] Since a space opened to the atmosphere and having a sufficient height difference (margin) is ensured between the overflow port and the outlet of the mixing part, backflow of bubble water or detergent bubble water can be prevented more easily.

[0050] The water flowing part may include a preliminary part formed above the overflow port, and an agitation part formed below the preliminary part, and bubble water may be mixed with detergent in the agitation part.

[0051] A projection may be formed on an inner wall surface of the agitation part.

[0052] With the projection, the inner wall surface area of the agitation part is enlarged, and turbulent flows are generated in bubble water, thereby promoting the mixing of bubble water and detergent.

[0053] The projection may be spirally formed on the inner wall surface of the agitation part.

[0054] The bubble generation device may further include a shear part that is formed on the downstream side of the water flowing part and that shears bubbles with an impeller.

[0055] The bubble generation device may be configured as a component including the mixing part and the water flowing part within a casing provided with a water supply port, an air inlet, the detergent port, and the overflow port. The mixing part may mix flush water and air provided through the water supply port and the air inlet to produce bubble water and may provide the bubble water to the water flowing part.

[0056] A flush toilet in an embodiment of the present invention includes: a toilet device including a toilet bowl part; a discharge port formed on the toilet device, through which flush water is discharged into the toilet bowl part; and a bubble generation device that is mounted on the toilet device and that provides flush water containing detergent to the discharge port. The bubble generation device includes: a mixing part that mixes flush water with air to produce bubble water; and a water flowing part formed on the downstream side of the mixing part and including a detergent port through which detergent is injected into bubble water. The water flowing part further includes an overflow port communicating with the outside of the water flowing part.

[0057] The toilet device has only to be a main part of

the flush toilet at least including the toilet bowl part and may also include a tank provided externally, for example.

[0058] A bubble generation device in another embodiment of the present invention includes a bubble water inlet through which bubble water is injected, and a detergent port through which detergent is injected. An agitation part is formed in a water path of bubble water to mix bubble water and detergent, and a projection is formed on an inner wall surface of the agitation part to partially limit the flowing of bubble water.

[EXPLANATION OF REFERENCE NUMERALS]

[0059] 100 flush toilet, 102 first discharge port, 104 second discharge port, 106 toilet bowl part, 108 toilet body, 110 water discharge pipe, 112 bubble generation device, 114 water supply pipe, 116 ejector, 118 water supply port, 120 air inlet, 122 detergent port, 124 overflow port, 126 water flowing part, 128 shear part, 130 preliminary part, 132 agitation part, 134 projections, 136 impeller, 138 casing, 140 outlet, 142 detergent, 144 bubble water, 146 coil spring, 150 overflow path

[INDUSTRIAL APPLICABILITY]

[0060] The present invention is applicable to a flush toilet.

Claims

1. A bubble generation device, comprising:

a mixing part that produces bubble water; and
a water flowing part formed on the downstream side of the mixing part, wherein
the water flowing part further includes an overflow port communicating with the outside of the water flowing part.

2. The bubble generation device according to claim 1, wherein the water flowing part further includes a detergent port through which detergent is injected into bubble water.

3. The bubble generation device according to claim 1 or 2, wherein:

the mixing part is formed so that bubble water flows down through an outlet into the water flowing part; and
the overflow port is positioned lower than the outlet and opened to the atmosphere.

4. The bubble generation device according to claim 2, wherein:

the water flowing part includes a preliminary part formed above the overflow port, and an agitation part formed below the preliminary part; and
bubble water is mixed with detergent in the agitation part.

5. The bubble generation device according to claim 4, wherein a projection is formed on an inner wall surface of the agitation part.

6. The bubble generation device according to claim 5, wherein the projection is spirally formed on the inner wall surface of the agitation part.

7. The bubble generation device according to any one of claims 1 through 6, further comprising a shear part that is formed on the downstream side of the water flowing part and that shears bubbles with an impeller.

8. The bubble generation device according to claim 2, configured as a component including the mixing part and the water flowing part within a casing provided with a water supply port, an air inlet, the detergent port, and the overflow port, wherein
the mixing part mixes flush water and air provided through the water supply port and the air inlet to produce bubble water and provides the bubble water to the water flowing part.

9. A flush toilet, comprising:

a toilet device including a toilet bowl part;
a discharge port formed on the toilet device, through which flush water is discharged into the toilet bowl part; and
a bubble generation device that is mounted on the toilet device and that provides flush water containing detergent to the discharge port,
the bubble generation device comprising:

a mixing part that mixes flush water with air to produce bubble water; and
a water flowing part formed on the downstream side of the mixing part and including a detergent port through which detergent is injected into bubble water,
wherein the water flowing part further includes an overflow port communicating with the outside of the water flowing part.

10. A bubble generation device, comprising a bubble water inlet through which bubble water is injected, and a detergent port through which detergent is injected, wherein:

an agitation part is formed in a water path of bubble water to mix bubble water and detergent; and
a projection is formed on an inner wall surface

of the agitation part to partially limit the flowing of bubble water.

FIG. 1

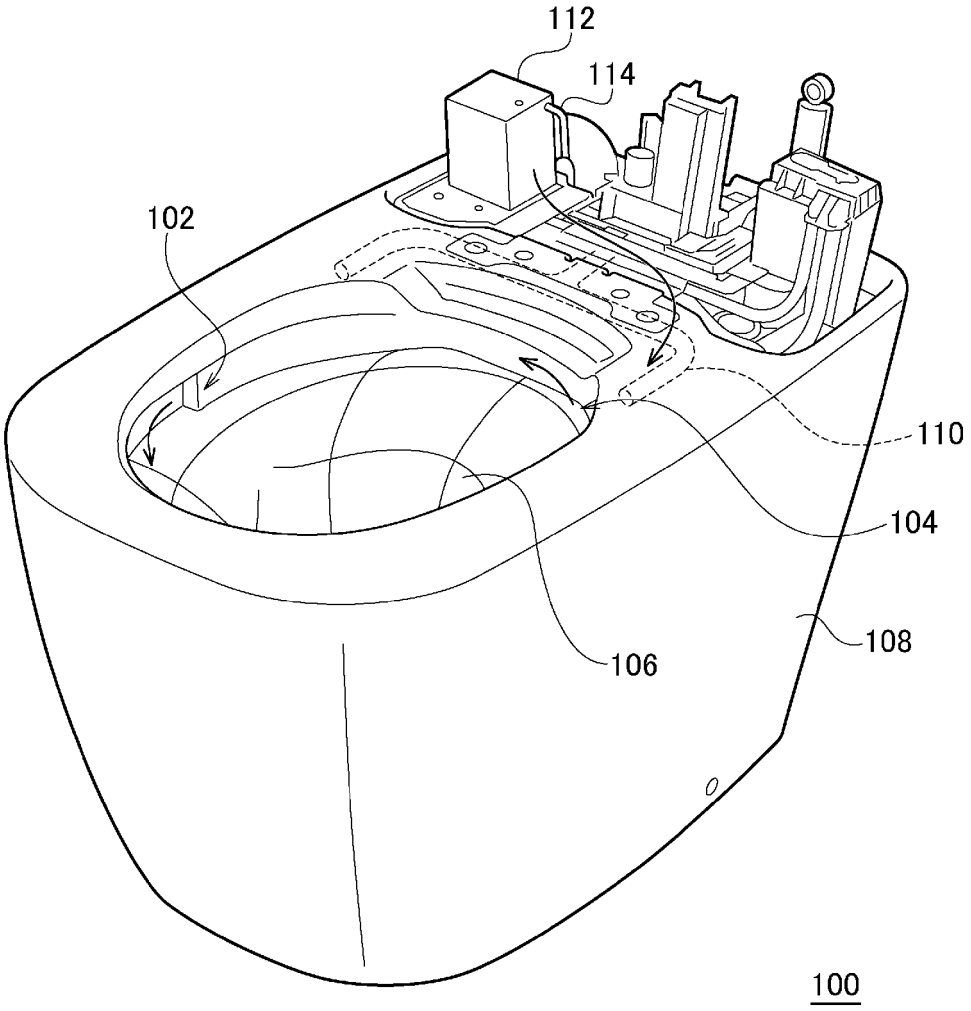

FIG. 2

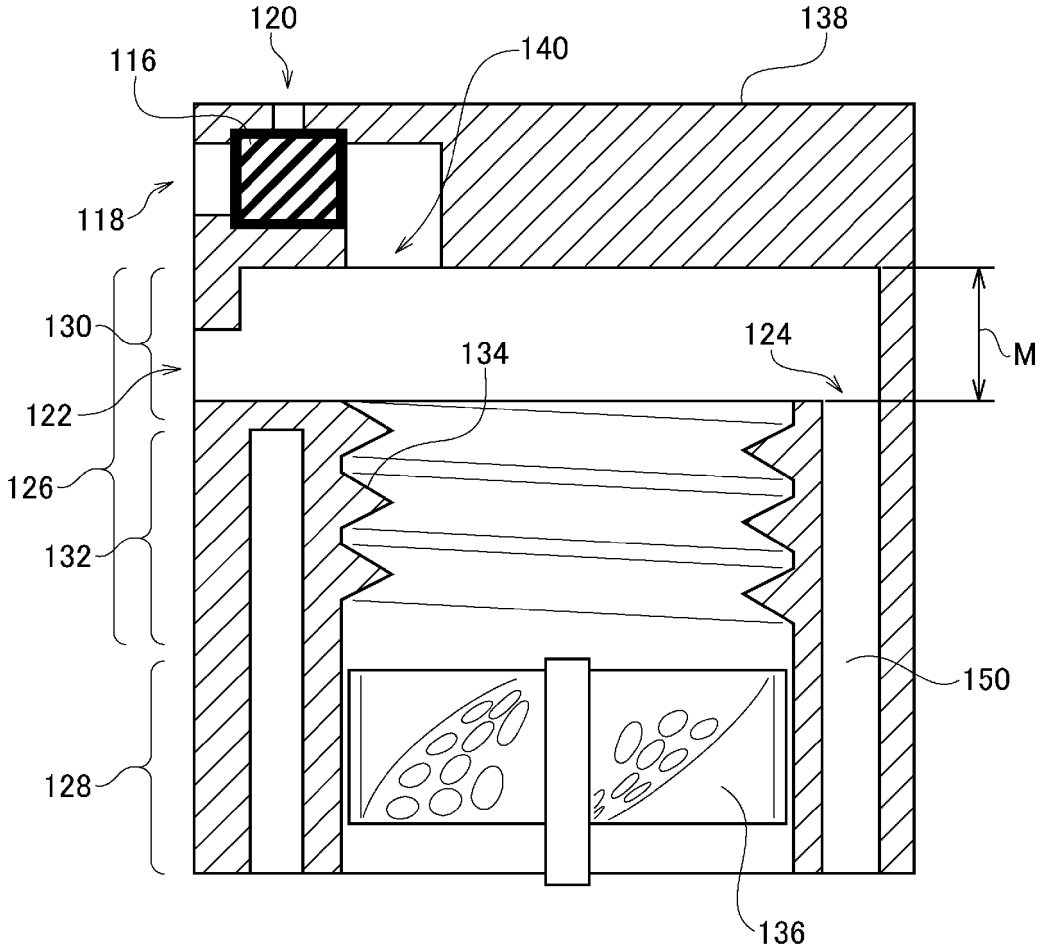

112

FIG. 3

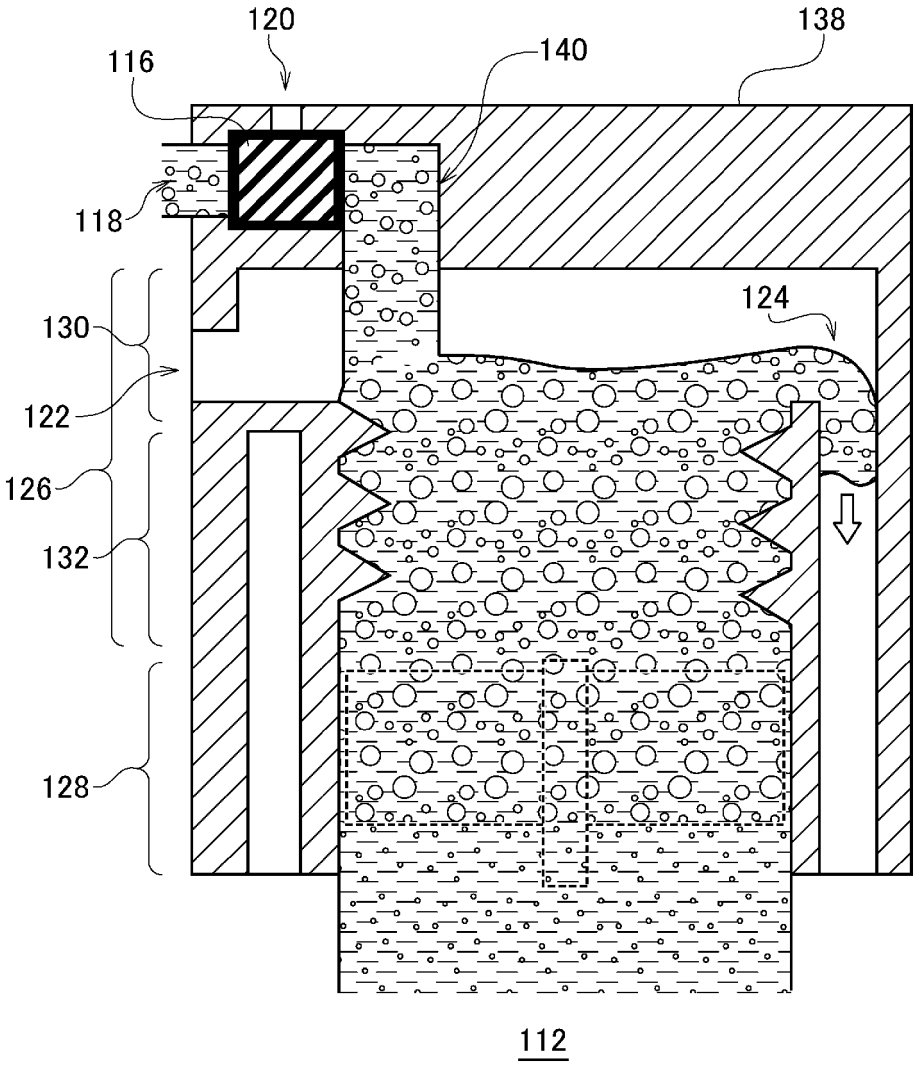

FIG. 4

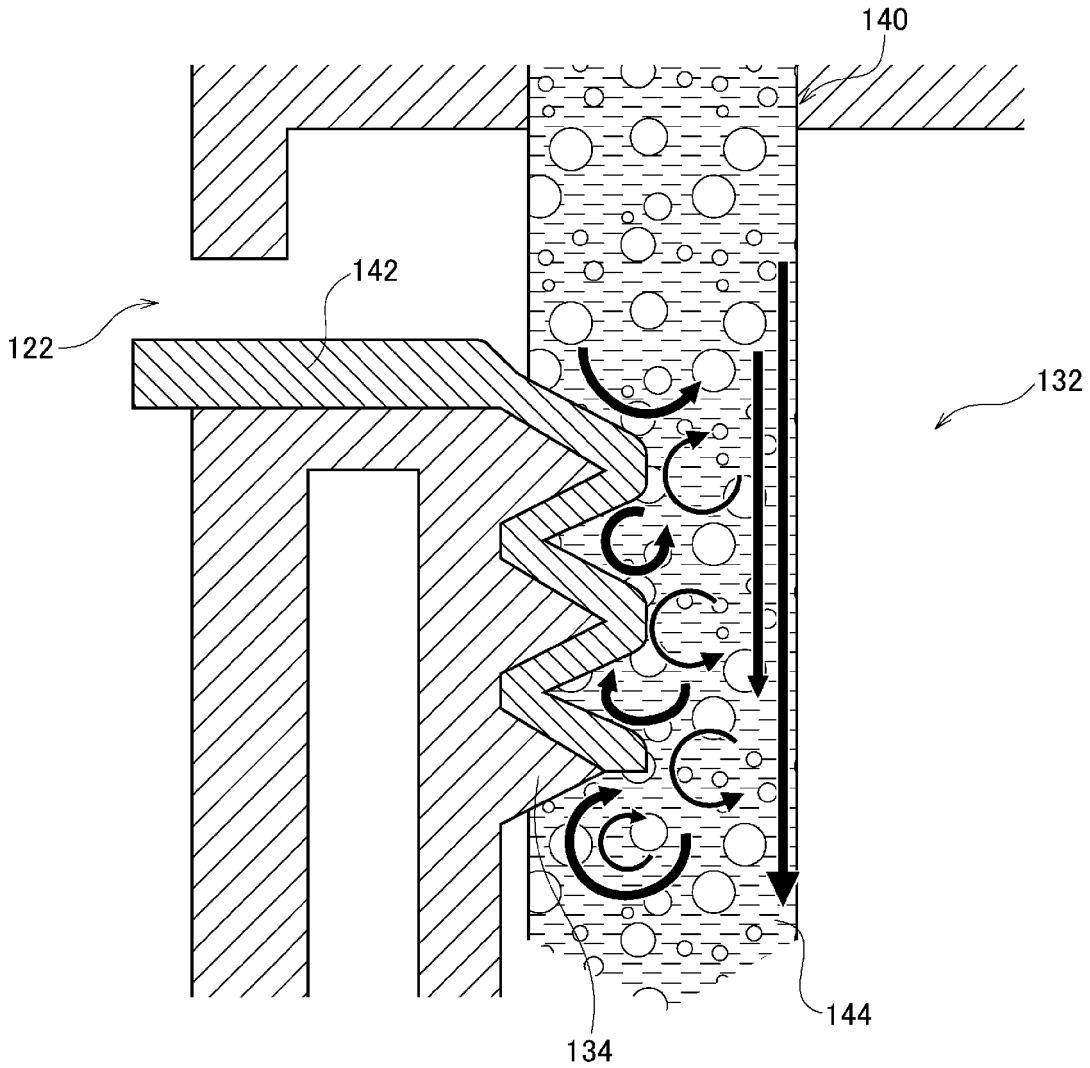

FIG. 5A

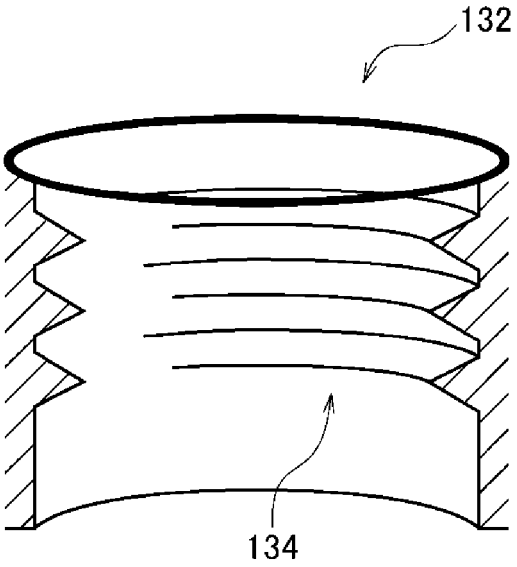

FIG. 5B

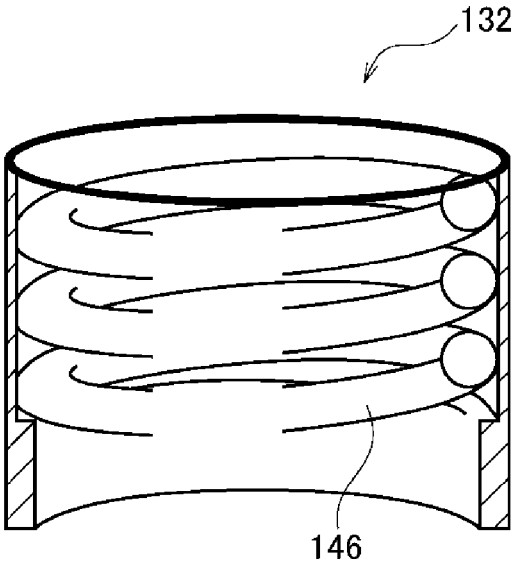

FIG. 6

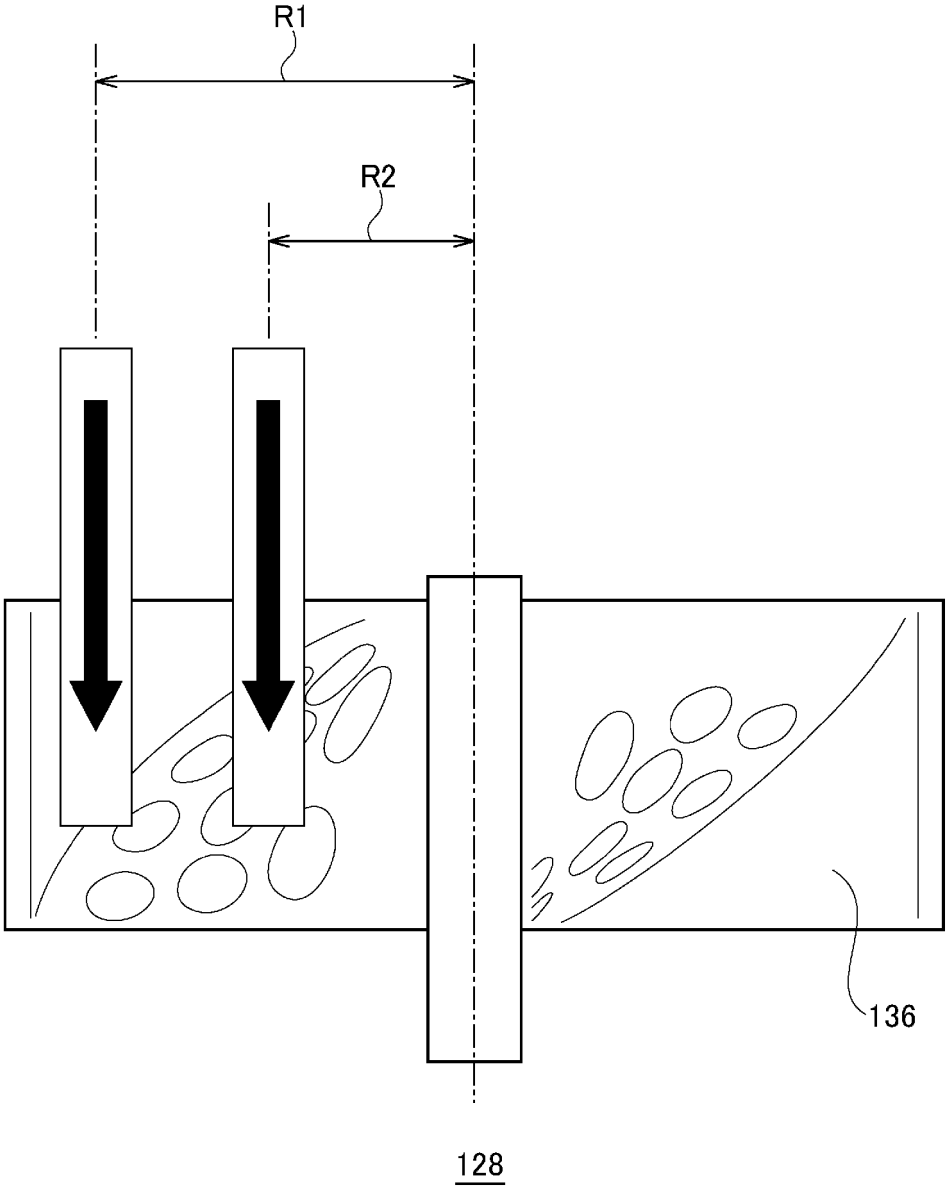

INTERNATIONAL SEARCH REPORT

International application No.
PCT/JP2016/066153

A. CLASSIFICATION OF SUBJECT MATTER
B01F3/04(2006.01)i, *B01F7/16*(2006.01)i, *B01F15/02*(2006.01)i, *E03D9/02*(2006.01)i, *E03D11/02*(2006.01)i

According to International Patent Classification (IPC) or to both national classification and IPC

B. FIELDS SEARCHED

Minimum documentation searched (classification system followed by classification symbols)
B01F3/04, B01F7/16, B01F15/02, E03D9/02, E03D11/02

Documentation searched other than minimum documentation to the extent that such documents are included in the fields searched

Jitsuyo Shinan Koho	1922-1996	Jitsuyo Shinan Toroku Koho	1996-2016
Kokai Jitsuyo Shinan Koho	1971-2016	Toroku Jitsuyo Shinan Koho	1994-2016

Electronic data base consulted during the international search (name of data base and, where practicable, search terms used)

C. DOCUMENTS CONSIDERED TO BE RELEVANT

Category*	Citation of document, with indication, where appropriate, of the relevant passages	Relevant to claim No.
X Y A	JP 56-130214 A (Shinryo Corp.), 13 October 1981 (13.10.1981), page 2, upper right column, line 3 to page 3, upper right column, the last line; fig. 1 to 2 & GB 2058737 A page 4, line 23 to page 5, line 13; fig. 3 to 4 & DE 3032887 A & FR 2464924 A1 & MY 65785 A & HK 101388 A & SG 74386 G	1-2,4-5,7-8 3 6
X Y	JP 2002-361239 A (Kabushiki Kaisha Tokyo Flow Meter Kenkyusho), 17 December 2002 (17.12.2002), claims; carrying-out mode 4; fig. 1, 4 & JP 2002-200486 A	1,3 3

☒ Further documents are listed in the continuation of Box C. ☐ See patent family annex.

* Special categories of cited documents:
"A" document defining the general state of the art which is not considered to be of particular relevance
"E" earlier application or patent but published on or after the international filing date
"L" document which may throw doubts on priority claim(s) or which is cited to establish the publication date of another citation or other special reason (as specified)
"O" document referring to an oral disclosure, use, exhibition or other means
"P" document published prior to the international filing date but later than the priority date claimed
"T" later document published after the international filing date or priority date and not in conflict with the application but cited to understand the principle or theory underlying the invention
"X" document of particular relevance; the claimed invention cannot be considered novel or cannot be considered to involve an inventive step when the document is taken alone
"Y" document of particular relevance; the claimed invention cannot be considered to involve an inventive step when the document is combined with one or more other such documents, such combination being obvious to a person skilled in the art
"&" document member of the same patent family

Date of the actual completion of the international search 22 August 2016 (22.08.16)	Date of mailing of the international search report 30 August 2016 (30.08.16)
Name and mailing address of the ISA/ Japan Patent Office 3-4-3,Kasumigaseki,Chiyoda-ku, Tokyo 100-8915,Japan	Authorized officer Telephone No.

Form PCT/ISA/210 (second sheet) (January 2015)

INTERNATIONAL SEARCH REPORT

International application No.
PCT/JP2016/066153

C (Continuation). DOCUMENTS CONSIDERED TO BE RELEVANT

Category*	Citation of document, with indication, where appropriate, of the relevant passages	Relevant to claim No.
X	JP 2009-7930 A (Panasonic Electric Works Co., Ltd.), 15 January 2009 (15.01.2009), BEST MODE FOR CARRYING OUT THE INVENTION; fig. 5 to 6, 10, 14, 16A to 16B & US 2010/0146693 A1 BEST MODE FOR CARRYING OUT THE INVENTION; fig. 5 to 6, 10, 14, 16A to 16B & WO 2007/013518 A1 & EP 1939366 A1 & KR 10-2008-0042841 A & CN 101228325 A	1-2,8-10
A	JP 2010-189742 A (Mitsubishi Electric Corp.), 02 September 2010 (02.09.2010), (Family: none)	1-10
A	JP 2002-356898 A (Toto Ltd.), 13 December 2002 (13.12.2002), & US 2003/0088910 A1 & WO 2001/073229 A1 & AU 4280801 A & HK 1057388 A & CN 1432094 A & KR 10-2003-0023616 A	1-10

Form PCT/ISA/210 (continuation of second sheet) (January 2015)

REFERENCES CITED IN THE DESCRIPTION

This list of references cited by the applicant is for the reader's convenience only. It does not form part of the European patent document. Even though great care has been taken in compiling the references, errors or omissions cannot be excluded and the EPO disclaims all liability in this regard.

Patent documents cited in the description

- JP 2002356898 A **[0003]**