(19) Europäisches Patentamt
European Patent Office
Office européen des brevets

(11) Publication number: **0 035 348**
B1

(12) **EUROPEAN PATENT SPECIFICATION**

(45) Date of publication of patent specification: **23.01.85**

(51) Int. Cl.⁴: **C 22 C 32/00**, B 32 B 15/14, B 32 B 15/20, F 02 F 3/12, B 22 F 7/06

(21) Application number: **81300719.2**

(22) Date of filing: **20.02.81**

(54) Sintered bodies of composite materials and their manufacture.

(30) Priority: **27.02.80 GB 8006548**

(43) Date of publication of application:
09.09.81 Bulletin 81/36

(45) Publication of the grant of the patent:
23.01.85 Bulletin 85/04

(84) Designated Contracting States:
BE CH DE FR IT LI NL SE

(56) References cited:
WO-A-79/01103
DE-A- 837 467
GB-A- 671 606
US-A-3 065 073

(73) Proprietor: **THE BRITISH INTERNAL COMBUSTION ENGINE RESEARCH INSTITUTE LIMITED**
111-112 Buckingham Avenue
Slough, Berkshire (GB)

(73) Proprietor: **The Secretary of State for Industry in Her Britannic Majesty's Government of the United Kingdom of Great Britain and Northern Ireland 1 Victoria Street**
London SW1H 0ET (GB)

(72) Inventor: **Nestorides, Evan John**
35 Staines Road Wraysbury
Staines Middlesex (GB)
Inventor: **Dower, Robert John**
4 Livingstone Drive East Kilbride
Glasgow Scotland (GB)

(74) Representative: **Kirby, Harold Victor Albert**
Central Patent Department Wembley Office The General Electric Company, p.l.c. Hirst Research Centre East Lane
Wembley Middlesex HA9 7PP (GB)

EP 0 035 348 B1

Note: Within nine months from the publication of the mention of the grant of the European patent, any person may give notice to the European Patent Office of opposition to the European patent granted. Notice of opposition shall be filed in a written reasoned statement. It shall not be deemed to have been filed until the opposition fee has been paid. (Art. 99(1) European patent convention).

Courier Press, Leamington Spa, England.

Description

This invention relates to bodies formed by sintering together mixtures of two or more particulate materials, and to articles incorporating or formed from such bodies, the invention having particular application to pistons for internal combustion engines, and to the manufacture of such pistons.

It is desirable for the crown portion of an internal combustion engine piston to have a high mechanical strength under the temperatures encountered under normal operating conditions.

It is known from the Patent Co-operation Treaty Publication No. WO—A—79/01103 to manufacture articles of composite materials comprising two or more layers of different material compositions, and in particular to manufacture a piston of an internal combustion engine having a crown formed of aluminium or an aluminium alloy having, mixed with it, a significant proportion of alumina to increase its mechanical strength, the piston having an intermediate portion with a smaller proportion of alumina and a skirt portion with a still smaller proportion of alumina, which may be zero. One method of forming the different layers is by compacting and sintering.

We have found that the hot strength of a body formed from a mixture of aluminium or aluminium alloy and alumina can be further improved, this being of particular advantage in the case of internal combustion engine pistons formed from such materials.

According, therefore, to one aspect of the invention a body formed wholly or in part of aluminium and/or aluminium alloy powder and alumina, which have been compacted and sintered to form a sintered mass, is characterised in that the mass includes at least 10% by weight of said alumina which has been added, in powder form, to the aluminium and/or aluminium alloy powder prior to compacting and sintering, and in that the sintered mass has been reshaped under pressure after sintering.

The incorporation of at least 10% alumina in powdered form together with the step of reshaping under pressure after sintering results in a body having an unexpectedly high hot strength, and a body formed in this maner is accordingly particularly suitable for forming the crown of an internal combustion engine piston. For example for this purpose the particle size of the aluminium or aluminium alloy powder and the alumina powder preferably lies between dust and 125 microns.

However the most suitable particle size of the constituents and the relative proportions thereof in a body in accordance with the invention will depend upon the use to which the body is to be put, and may readily be found by trial for any particular application of the invention.

A body in accordance with the invention may constitute the whole of an article, such as a piston, or only part of an article, for example the crown portion of a piston.

Thus it may be desirable in some cases for different parts of an article, such as a piston, to have different physical properties, for example where they are likely to be subjected to different conditions in use. Accordingly, in a body in accordance with the invention, the proportions of aluminium and/or aluminium alloy powder and alumina powder may be different for different regions and vary in a controlled manner from one region of the body to an adjacent region.

This makes it possible to provide a controlled graded change of mechanical and thermal properties from one region of the body to another, and thus enables a composite body to be formed with regions having different properties whilst avoiding any substantial discontinuous change of properties which could lead to separation of adjoining regions after a period of use. The thickness of a region with or without a controlled graded change may be from about one millimetre to ten centimetres, or greater, depending upon the nature and intended use of the body.

A body in accordance with the invention may be formed of a plurality of layers incorporating different proportions of alumina, and bonded together in any convenient manner, for example by sintering. Where there are three or more layers these may be bonded together simultaneously or successively. The reshaping of the body as by forging under heat and pressure in accordance with the invention may take place after all or some of the layers have been bonded together.

Where a body in accordance with the invention forms only part of an article it may, for example, be bonded to another part of the article, where this is of a mainly metallic nature, by friction welding, by sintering under pressure, or in any other suitable manner, after the reshaping of the body. Said other part of the article may be formed of aluminium and/or an aluminium alloy and may also incorporate a proportion of alumina powder.

Thus an article may comprise a body in accordance with the invention having a relatively high proportion of alumina forming a first region of the article, an intermediate region having a relatively smaller proportion of alumina and a third region having a smaller or zero proportion of alumina.

The composition of the intermediate region in such an article may vary in such a case, the region having a relatively high proportion of alumina adjacent the first region and a lower or zero proportion of alumina adjacent the third region. The regions can have the same thickness or different thicknesses depending upon operational requirements.

The invention has particular application to pistons for internal combustion engines.

Thus according to another aspect of the

invention a piston has a crown portion formed of controlled proportions of aluminium and/or an aluminium alloy powder and alumina powder which powders have been mixed together, and a skirt portion formed of aluminium and/or an aluminium alloy with a smaller or zero proportion of alumina. The composite piston is compacted and sintered, and the resultant mass is reshaped under pressure after sintering. Alternatively the crown portion may be compacted, sintered, and shaped under pressure, and then joined to the skirt portion, with or without subsequent reshapping of the entire piston under pressure.

The piston may conveniently have an intermediate region in which the proportion of alumina is intermediate that of the crown and the skirt, and may vary from a maximum adjacent the crown to a minimum adjacent the skirt. Thus the proportion of alumina to aluminium and/or aluminium alloy may vary from the skirt to the crown within the range 0 to 50% by weight.

Preferably the proportion of alumina to aluminium and/or aluminium alloy is from 10% to 50% at the crown, and from 0 to 10% at the skirt.

The intermediate portion may form part of the composite piston, which is compacted, sintered and reshaped after sintering. Alternatively the intermediate portion may form part of the crown portion, or of the skirt portion, which are joined together with or without subsequent reshaping of the entire piston under pressure, and with or without an intermediate surface treatment.

The invention includes within its scope the manufacture of a body of composite material including the steps compacting a quantity of aluminium and/or an aluminium alloy powder and sintering to form a sintered mass, and characterised in that at least 10% by weight of alumina is mixed with the aluminium and/or aluminium alloy powder prior to compacting and sintering, and in that the sintered mass is reshaped under pressure.

Two pistons in accordance with the invention will now be described by way of example with reference to Figures 1 and 2 of the accompanying drawings in which:

Figure 1 is an axial section of one piston showing two half sections at right angles to each other, and

Figure 2 is a similar view of the second piston.

Referring first to Figure 1, the piston illustrated therein comprises a crown portion 1, an intermediate portion 2, and a skirt portion 3. The crown portion 1 consists of a mixture of aluminium powder and/or an aluminium alloy powder having a particle size of between dust and 125 microns, and between 50 and 10% by weight of alumina powder of approximately the same particle size. The skirt portion 3 similarly consists of the same particle size as in the crown with only a small or zero proportion of alumina.

The intermediate portion as indicated by the broken lines 2 between the crown portion 1 and the skirt portion 3 is also formed of a mixture of aluminium and/or aluminium alloy powder and alumina, the proportion of the alumina being intermediate those of the crown portion and the skirt portion. In some cases the intermediate portion 2 may have a higher proportion of alumina adjacent the crown portion and a lower proportion (which may be zero) of alumina adjacent the skirt portion, the proportion of alumina in such a case preferably varying in a continuous manner throughout the portion.

Preferably the body forming the crown portion extends down along the sides of the piston and is machined or formed with a series of grooves 4 for accommodating the compression rings.

The crown portion, the intermediate portion, and the skirt portion, with their individual mixtures, are compacted, and sintered together, the resultant mass being shaped thereafter to its final shape under heat and pressure.

In a modification without an intermediate portion the proportion of alumina in the skirt may be graded, varying from a maximum, which may be comparable with that in the crown portion, adjacent the latter, to a minimum, which may be zero, furthest from the crown portion.

In an alternative modification, the crown portion is compacted, sintered and shaped under heat and pressure separately and this procedure is also applied to the intermediate portion and to the skirt portion. The individual portions are then bonded together and pressed under heat and high pressure to their final shape.

In a modification the crown portion, with the intermediate portion, may be bonded to the skirt portion by friction welding or in any other convenient manner

The material forming the crown portion 1 provides most of the mechanical hot strength of the piston, and has a lower thermal conductivity than the skirt portion, or the intermediate portion where provided.

In another embodiment of the invention as illustrated in Figure 2 the compression ring grooves 4 are formed in an annular body 5 which is fabricated separately from the crown portion 1, but which similarly comprises a mixture of aluminium alloy powder with between 10 and 50% by weight of alumina powder. In forming the body the powders are similarly mixed together compacted and sintered, and subsequently shaped under heat and pressure prior to being bonded to the skirt portion. In this example the crown portion 1 and the body 5 are conveniently supported in the appropriate relative positions in a suitable mould, and the skirt portion formed in situ in the mould, and simultaneously bonded to the crown portion and the body 5.

However the skirt portion itself need not be

formed by powder process but may be cast from molten metal or fabricated in any other convenient manner.

Although the invention is especially applicable to pistons, it will be appreciated that bodies in accordance with the invention may also be used to advantage in the construction of other articles, for example solid or hollow cylinders or tapered sections, with or without ribs or flanges, casings, turbine blades and combustors.

Claims

1. A body formed wholly or in part of aluminium and/or an aluminium alloy powder and alumina which have been compacted and sintered to form a sintered mass, said mass including at least 10% by weight of said alumina which has been added, in powder form, to the aluminium and/or aluminium alloy powder prior to compacting and sintering, and in which the sintered mass has been reshaped under pressure after sintering.

2. A body according to Claim 1 comprising two or more regions having different proportions of aluminium and/or aluminium alloy powder and alumina powder.

3. A body according to Claim 2 in which the proportion of alumina varies in a controlled manner from one region of the body to an adjacent region.

4. A body according to Claim 1 which forms part of an article another part of which is mainly metallic, and in which the body is bonded to said other part of the article.

5. A body according to Claim 4 in which the other part of the body is formed of aluminium or an aluminium alloy with or without a proportion of alumina.

6. A body according to Claim 3 comprising a first region incorporating a relatively high proportion of alumina, an intermediate region incorporating a relatively smaller proportion of alumina, and a third region having a smaller or zero proportion of alumina.

7. A body according to Claim 6 in which the intermediate region has a relatively high proportion of alumina adjacent the first region and a lower or zero proportion of alumina adjacent the third region.

8. A body according to Claim 1 which forms at least the crown portion of the piston of an internal combustion engine.

9. The manufacture of a body of composite materials which includes the steps compacting a quantity of aluminium and/or an aluminium alloy powder and alumina and sintering to form a sintered mass, characterised in that at least 10% by weight of said alumina in powdered form is mixed with the aluminium and/or aluminium alloy powder prior to compacting and sintering, and in that the sintered mass is reshaped under pressure.

10. The manufacture of a body according to Claim 9 comprising the steps of forming separately a plurality of sintered and shaped masses having different proportions of aluminium and/or aluminium alloy powder and alumina powder, at least one of which contains at least 10% by weight of alumina and subsequently bonding the masses together.

11. The manufacture of a body according to Claim 9 comprising the steps of forming separately a plurality of sintered masses having different proportions of aluminium and/or aluminium alloy powder and alumina powder, at least one of which contains at least 10% by weight of alumina, bonding together the sintered mass and effecting the reshaping of the body after the sintered masses have been bonded together.

12. A piston for an internal combustion engine in which different parts are formed of aluminium and/or an aluminium alloy powder with different porportions of alumina, and having a crown portion (1) containing at least 10% alumina, and a skirt portion (3) containing from 0 to 10% alumina, the parts having been compacted together and sintered, and the resultant mass reshaped under pressure after sintering.

13. A piston for an internal combustion engine in which different parts are formed of aluminium and/or an aluminium powder with different proportions of alumina, and having a crown portion (1) containing at least 10% of alumina and a skirt portion (3) containing from 0 to 10% alumina, the powders forming the crown portion being compacted and sintered, and shaped under pressure after sintering, and the shaped mass being joined to the skirt portion with or without subsequent reshaping of the entire piston under pressure.

14. A piston according to Claim 12 or 13 comprising an intermediate region (2) in which the proportion of alumina is intermediate that of the crown and skirt.

Revendications

1. Objet formé entièrement ou en partie en de la poudre d'aluminium et/ou en un alliage d'aluminium et en de l'alumine qui ont été compactées et frittées pour former une masse frittée, ladite masse comprenant au moins 10% en poids de ladite alumine qui a été ajoutée sous forme de poudre, à la poudre d'luminium et/ou d'alliage d'aluminium avant compactage et frittage, et dans lequel la masse frittée a été refaçonnée sous pression après frittage.

2. Objet selon la revendication 1, comprenant deux, ou plus de deux, régions ayant des proportions différentes de poudre d'aluminium et/ou d'alliage d'aluminium et de poudre d'alumine.

3. Objet selon la revendication 2, dans lequel la proportion d'alumine varie de manière réglée d'une région de l'objet à une région adjacente.

4. Objet selon la revendication 1, faisant

partie d'un article dont une autre partie est principalement métallique, et dans lequele l'objet ou corps est relié à ladite autre partie de l'article.

5. Objet selon la revendication 4, dans lequel l'autre partie de cet objet est en aluminium ou en un alliage d'aluminium avec ou sans une certaine proportion d'alumine.

6. Objet selon la revendication 3, comprenant une première région incorporant une proportion relativement élévée d'alumine, une région intermédiaire incorporant une proportion relativement plus faible d'alumine, et une troisième région ayant une proportion plus faible ou nulle d'alumine.

7. Objet selon la revendication 6, dans lequel la région intermédiaire comporte une proportion relativement élevée d'alumine près de la première région et une proportion inférieure ou nulle d'alumine près de la troisième région.

8. Objet selon la revendication 1, qui forme au moins la partie terminale ou tête du piston d'un moteur à combustion interne.

9. Fabrication d'un objet en des matériaux composites, qui comprend les étapes consistant à compacter une certaine quantité de poudre d'aluminium et/ou d'un alliage d'aluminium et de l'alumine et à la fritter pour former une masse frittée, fabrication caractérisée en ce qu'au moins 10 % en poids de ladite alumine sous forme de poudre sont mélanges à de la poudre d'aluminium et/ou d'alliage d'aluminium avant compactage et frittage, et en ce que la masse frittée est refaçonnée sous pression.

10. Fabrication d'un objet selon la revendication 9, comprenant les étapes consistant à former séparément plusieurs masses frittées et façonnées ayant des proportions différentes de poudre d'aluminium et/ou d'alliage d'aluminium et de poudre d'alumine, dont l'une au moins contient au moins 10 % en poids d'alumine, et à relier ensuite les masses ensemble.

11. Fabrication d'un objet selon la revendication 9, comprenant les étapes consistant à former séparément plusieurs masses frittées ayant des proportions différentes de poudre d'aluminium et/ou d'alliage d'aluminium et de poudre d'alumine, l'une au moins de ces masses contenant au moins 10 % en poids d'alumine, à lier ensemble les masses frittées et à effectuer le refaçonnage de l'objet après que les masse frittées aient été liées ensemble.

12. Piston pour moteur à combustion interne, dans lequel différentes parties sont formées en de la poudre d'aluminium et/ou d'un alliage d'aluminium présentant des proportions différentes d'alumine, et ayant une partie terminale ou tête (1) contenant au moins 10 % d'alumine et une jupe (3) contenant de 0 à 10 % d'alumine, les parties ayant été compactées ensemble et frittées, et la masse résultante ayant été refaçonnée sous pression après frittage.

13. Piston pour moteur à combustion interne dans lequel différentes parties sont formées en de la poudre d'aluminium et/ou d'un alliage d'aluminium présentant des proportions différentes d'alumine, et ayant une partie terminale ou tête (1) contenant au moins 10 % d'alumine et une jupe (3) contenant de 0 à 10 % d'alumine, les poudres formant la tête étant compactées et frittées et façonnées sous pression après frittage, et la masse façonnée étant liée à la jupe avec ou sans refaçonnage subséquent, sous pression, de la totalité du piston.

14. Piston selon la revendication 12 ou 13, comprenant une région intermédiaire (2) dans laquelle la proportion d'alumine est intermédiaire entre celles de la tête et de la jupe.

Patentansprüche

1. Formkörper, der ganz oder teilweise aus Aluminium und/oder eine Aluminiumlegierungpulver und Aluminiumoxid gebildet ist, die verdichtet und gesintert wurden, um eine gesinterte Masse zu bilden, dadurch gekennzeichnet, daß die Masse wenigstens 10 Gewichtprozent Aluminiumoxid enthält, das in Pulverform dem Aluminium- und/oder Aluminiumlegierungpulver vor dem Verdichten und Sintern zugefügt wurde, und daß die gesinterte Masse unter Druck nach dem Sinterne regeneriert wurde.

2. Formkörper nach Anspruch 1, gekennzeichnet durch zwei oder mehr Bereiche mit unterschiedlichen Mengenverhältnissen von Aluminium- und/oder Aluminiumlegierungpulver und Aluminiumoxidpulver.

3. Formkörper nach Anspruch 2, dadurch gekennzeichnet, daß der Anteil von Aluminiumoxid in einer gesteuerten Weise von einem Bereich des Formkörpers zu einem angenzenden Bereich variiert.

4. Formkörper nach Anspruch 1, dadurch gekennzeichnet, daß er einen Teil eines Gegenstandes Bildet, von dem ein anderer Teil im wesentlichen metallisch ist, wobei der Formkörper mit dem anderen Teil des Gegenstandes verbunden ist.

5. Formkörper nach Anspruch 4, dadurch gekennzeichnet, daß der andere Teil des Formkörpers aus Aluminium oder einer Aluminiumlegierung mit oder ohne einen Anteils von Aluminiumoxid gebildet ist.

6. Formkörper nach Anspruch 3, gekennzeichnet durch einen ersten Bereich mit einem relativ hohen Anteil von Aluminiumoxid, einen Zwischenbereich mit einem relativ geringeren Anteil von Aluminiumoxid und einen dritten Bereich mit einem kleineren Anteil oder einem Anteil von Null von Aluminiumoxid.

7. Formkörper nach Anspruch 6, dadurch gekennzeichnet, daß der Zwischenbereich einen relativ hohen Anteil von Aluminiumoxid nahe dem ersten Bereich und einen geringen Anteil oder Anteil von Null von Aluminiumoxid nahe dem dritten Bereich hat.

8. Formkörper nach Anspruch 1, dadurch gekennzeichnet, daß er wenigstens der Kopfabschnitt des Kolbens einer Verbrennungskraftmaschine bildet.

9. Herstellung eines Formkörpers aus Verbundwerkstoffen mit den Schritten der Verdichtung einer Masse von Aluminium und/oder einem Aluminiumlegierungpulver und Aluminiumoxid und des Sinterns zur Ausbildung einer gesinterten Masse, dadurch gekennzeichnet, daß wenigstens 10 Gewichtsprozent des Aluminiumoxids in Pulverform mit dem Aluminium und/oder Aluminiumlegierungpulver vor dem Verdichten und Sintern vermischt wird, und daß die gesinterte Masse unter Druck regeneriert wird.

10. Herstellung eines Formkörpers nach Anspruch 9, dadurch gekennzeichnet, daß mehrere gesinterte und geformte Massen mit verschiedenen Mengenverhältnissen von Aluminium- und/oder Aluminiumlegierungpulver und Aluminiumoxidpulver getrennt gebildet werden, wobei wenigstens eine davon wenigstens 10 Gewichtprozent Aluminiumoxid enthält und daß anschließend die Massen miteinander verbunden werden.

11. Herstellung eines Formkörpers nach Anspruch 9, dadurch gekennzeichnet, daß mehrere gesinterte Massen mit unterschiedlichen Mengenverhältnissen von Aluminium- und/oder Aluminiumlegierungpulver und Aluminiumoxidpulver getrennt gebildet werden, wobei wenigstens eine davon wenigstens 10 Gewichtprozent Aluminiumoxid enthält, daß die gesinterten Massen miteinander verbunden werden und daß der Formkörper nach der Verbindung der gesinterten Massen regeneriert wird.

12. Kolben für eine Verbrennungskraftmaschine, mit verschiedenen Teilen, die aus Aluminium und/oder einem Aluminiumlegierungpulver mit unterschiedlichen Anteilen von Aluminiumoxid gebildet sind, und mit einem Kopfabschnitt (1), der wenigstens 10% Aluminiumoxid enthält, und einem unteren Randabschnitt (3), der zwischen 0 und 10% Aluminiumoxid enthält, dadurch gekennzeichnet, daß die Teile zusammen verdichtet und gesintert sind, und daß die zusammengesetzte Masse unter Druck nach dem Sintern regeneriert ist.

13. Kolben für eine Verbrennungskraftmaschine, wobei verschiedene Teile aus Aluminium und/oder einem Aluminiumpulver mit unterschiedlichen Anteilen von Aluminiumoxid gebildet sind, mit einem Kopfabschnitt (1) mit wenigstens 10% Aluminiumoxid und einem unteren Randabschnitt (3) mit 0 bis 10% Aluminiumoxid, dadurch gekennzeichnet, daß die Pulver, die den Kopfabschnitt bilden, verdichtet und gesintert, und nach dem Sintern unter Druck geformt sind, und daß die geformte Masse an den unteren Randabschnitt angefügt ist mit oder ohne nachfolgender Regenerierung unter Druck des gesamten Kolbens.

14. Kolben nach Anspruch 12 oder 13, gekennzeichnet durch einen Zwischenbereich (12), in dem Anteil von Aluminiumoxid zwischen demjenigen des Kopfabschnitts und demjenigen des unteren Randabschnitts liegt.

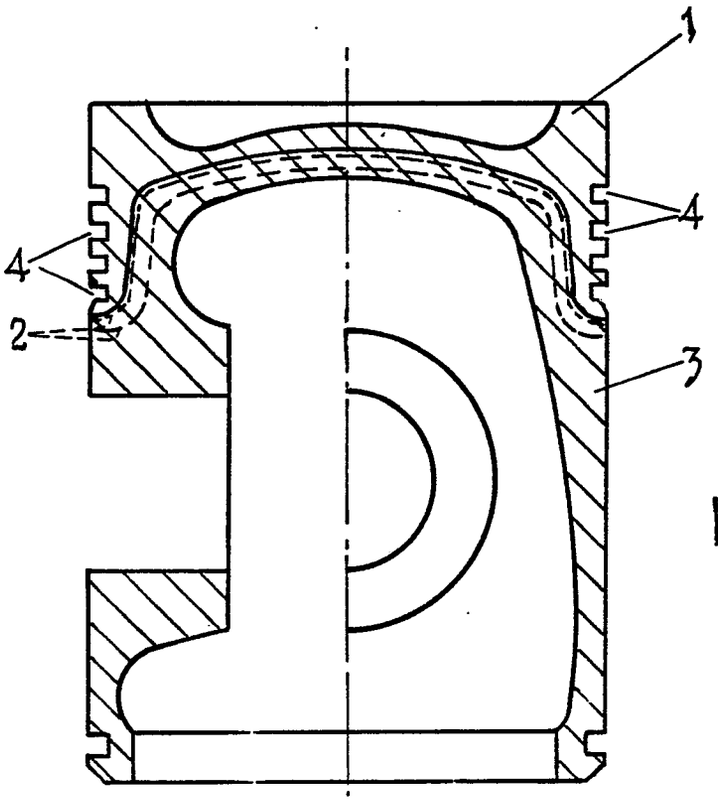

FIG.1.

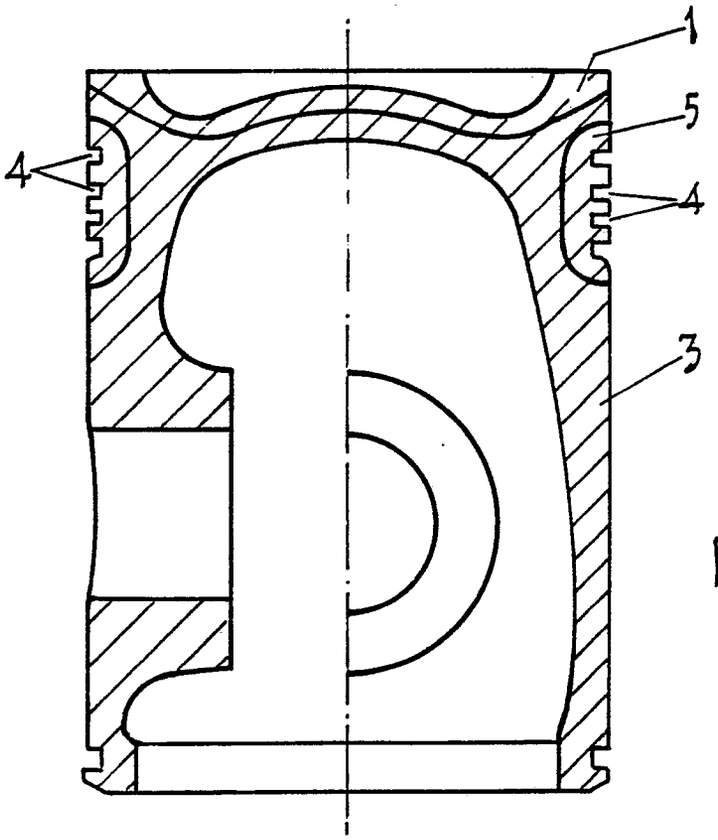

FIG.2.