(19) Europäisches Patentamt
European Patent Office
Office européen des brevets

(11) Publication number: **0 035 404**
B1

(12) # EUROPEAN PATENT SPECIFICATION

(45) Date of publication of patent specification: **23.01.85**

(51) Int. Cl.⁴: **G 03 G 15/28**

(21) Application number: **81300865.3**

(22) Date of filing: **03.03.81**

(54) **An electrophotographic reproducing machine.**

(30) Priority: **03.03.80 US 126586**

(43) Date of publication of application:
09.09.81 Bulletin 81/36

(45) Publication of the grant of the patent:
23.01.85 Bulletin 85/04

(84) Designated Contracting States:
DE FR GB

(56) References cited:
DE-A-2 309 296
DE-B-2 437 520
US-A-4 129 373

RESEARCH DISCLOSURE, No. 188, December 1979 "Electrographic Apparatus Having Improved Development Structure" pages 683 to 684

(73) Proprietor: **XEROX CORPORATION**
Xerox Square - 020
Rochester New York 14644 (US)

(72) Inventor: **Aser, Gilbert A.**
5 Chale Circle
Rochester New York 14618 (US)

(74) Representative: **Prior, Nicholas J. European Patent Attorney et al**
Rank Xerox Patent Department 338 Euston Road
London NW1 3BH (GB)

Note: Within nine months from the publication of the mention of the grant of the European patent, any person may give notice to the European Patent Office of opposition to the European patent granted. Notice of opposition shall be filed in a written reasoned statement. It shall not be deemed to have been filed until the opposition fee has been paid. (Art. 99(1) European patent convention).

Courier Press, Leamington Spa, England.

EP 0 035 404 B1

Description

This invention relates generally to electrophotographic reproducing machines, and more particularly to such machines including an electrophotographic reproducing machine including means for supporting substantially stationarily an original document being reproduced, a photoconductive member, and means for recording a latent image on said photoconductive member.

In electrophotographic printing, the electrostatic latent image comprises electrostatic surface charges. These surface charges may be transferred to or reproduced upon a dielectric surface. The technique for accomplishing charge transfer is referred to as a TESI process, from transfer of electrostatic images. Hence, electrostatic latent images may be transferred to another surface prior to development. The material to which the electrostatic latent image is transferred must, of course, be capable of retaining the image, i.e. it must be a good insulator. Thus, electrostatic latent images may be transferred to the dielectric coated paper. The transferred images can be developed by the same methods hereinbefore described for developing the electrostatic latent images recorded on the photoconductive member. However, since the charge on the dielectric surface is not dissipated by exposure to light, it is not necessary to shield the image from light during development. After the electrostatic latent image transferred to the dielectric sheet has been developed, the powder image thereon may be fused thereto forming a finished copy sheet.

Various types of electrostatographic printing machines have hereinbefore been employed to utilize the foregoing processes.

U.S. Patent Nos. 2,825,814; 2,833,648 and 2,937,943 disclose a photosensitive plate closely spaced to an electrode with an insulating web passing therebetween. Voltage is induced between the plate and electrode to cause the electrical charge pattern recorded on the plate to migrate to the web. The web is developed and the resultant powder image fused thereto so as to form a copy of the original document.

U.S. Patent No. 2,975,052 describes the formation of an electrostatic latent image on a photosensitive element. The photosensitive element is brought into contact with a plate consisting of an electrically insulating material and an electrically conductive material. Electrical contact is established between the conductive layer of the photosensitive element and the conductive material of the plate. As a result, the latent image is transferred to the insulating material of the plate which is developed into a visible image.

U.S. Patent No. 2,982,647 teaches the transfer of an electrostatic latent image which has been previously formed on a first insulating surface to a second insulating surface in contact therewith by producing an intense electrical field between the surfaces and subsequently separating the surfaces.

U.S. Patent No. 3,574,455 describes a photoconductive drum moving in a planetary motion so that a point on the drum's surface has zero velocity when adjacent to a particular functional station. This permits incremental printing upon the paper. This movement of the drum permits the paper to be moved freely between printing stations. DE—A—2309296 describes an electrophotographic reproducing machine according to the pre-characterizing portion of claim 1.

The present invention is characterized in that the photoconductive member is translated such that the relative velocity between the portion of the stationary document being scanned by the exposing means and the increment of the photoconductive member receiving the image from the exposing means is zero, and the charging means, the transfer means and the exposing means are translated together with the photoconductive member.

Several ways of carrying out the invention are described in detail below with reference to the accompanying drawings, in which:

Figure 1 illustrates a schematic elevational view of one embodiment of reproducing machine according to the invention employing a photoconductive drum;

Figure 2 shows a schematic elevational view of another embodiment of reproducing machine according to the invention using a photoconductive belt; and

Figure 3 depicts a schematic elevational view of a further embodiment of reproducing machine according to the invention using a photoconductive belt.

Referring now to Figure 1, the embodiment of the electrophotographic printing machine depicted thereat includes a drum, indicated generally by the reference numeral 10, having a photoconductive surface secured to a conductive substrate. Drum 10 is mounted rotatably on a carriage (not shown) which translates in the direction of arrow 12. As drum 10 translates in the direction of arrow 12, it rotates about its longtudinal axis in the direction of arrow 14. In this way, the drum velocity at the point of exposure is essentially zero. Thus, the photoconductive surface, at the point of exposure to a light image of an original document has zero velocity.

At charging station A, a corona generating device, indicated generally by the reference numeral 16, translates with the drum so as to charge successive portions of the photoconductive surface of drum 10 to a relatively high, substantially uniform potential. Corona generating device 16 is mounted on the carriage supporting drum 10 rotatably so as to translate therewith.

Next the charged portion of the photoconductive surface of drum 10 is illuminated at

exposure station B. The original document 18 is positioned face down upon a stationary transparent platen 20. The exposure system includes a lamp 22 and lens strip 24 mounted on the carriage supporting drum 10 so as to translate therewith. As lamp 22 translates, it illuminates incremental widths of original document 18. The light rays transmitted from the original document 18 are transmitted through lens strip 24 from a light image thereof. This light image selectively discharges the charged portion of the photoconductive surface of drum 10 so as to form an electrostatic latent image thereon. The instantaneous velocity of the photoconductive surface of drum 10 is zero at exposure station B. In operation, as lamp 22 and lens strip 24 translate relative to original document 18, successive charged portions of the photoconductive surface are positioned at exposure station B having a zero velocity relative to the stationary original document. This permits wide latitudes in system operations. A suitable lens strip optical system is described in U.S. Patent No. 3,544,190.

Next, drum 10 rotates the electrostatic latent image recorded on the photoconductive surface thereof to transfer station C. At transfer station C, the electrostatic latent image recorded on the photoconductive surface of drum 10 is transferred to a dielectric sheet 26. A conveyor (not shown) translates the dielectric sheet in the direction of arrow 12 at twice the linear velocity of drum 10. During the translation of both drum 10 and dielectric sheet 26 in the direction of arrow 12, drum 10 continues to rotate in the direction of arrow 14 so as to transfer incremental electrostatic latent images onto dielectric sheet 26. When dielectric sheet 26 reaches the end of movement, i.e. one half a revolution of drum 10 beyond the end of platen 20, as shown by the dotted representation of drum 10, the entire electrostatic latent image has transferred thereto. The relative linear velocity between drum 10 and dielectric sheet 26 at the point of contact, is essentially zero. Preferably, dielectric sheet 26 may be of any composition suitable for electrographic recording. By way of example, Mylar, polystyrene and polyethylene are examples of coatings which may be formed on plain paper to produce a dielectric sheet capable of retaining an electrostatic latent image thereon.

At transfer station C, the electrostatic latent image is transferred from drum 10 to dielectric sheet 26. Inasmuch as the charge on dielectric sheet 26 is not dissipated by exposure to light, it is not necessary to shield the image from light during the subsequent processing steps. Dielectric sheet 26 contacts an elongated conductive rubber roller 28. A non-conductive rubber pad 30 is positioned prior to roller 28 in the direction of rotation of drum 10, as indicated by arrow 14. Both roller 28 and pad 30 are mounted on the translating carriage supporting drum 10 rotatably. Preferably, roller 28 is electrically gounded provided the photoconductive surface of drum 10 is maintained at a sufficiently high potential. Alternatively, if the photoconductive surface of drum 10 is at a lower potential, a voltage source electrically couples roller 28 to the conductive backing of drum 10. The voltage source applies an electrical field between the conductive backing of drum 10 and roller 28. The electrical field applied by the voltage source is of a suitable magnitude and polarity to transfer the electrostatic latent image from the photoconductive surface of drum 10 to the dielectric sheet. Preferably, the potential difference between the conductive backing of drum 10 and conductive roller 28 is about 1,000 volts. Various techniques have hereinbefore been described teaching the process of transferring an electrostatic latent image from a photoconductive surface to a dielectric sheet.

Preferably, the carriage supporting drum 10 and the various processing stations translating therewith is mounted on a drive screw and bearing rod arranged with their axes in a parallel and spaced relationship on a base plate. A motor, coupled to a gear box, turns the drive screw which in turns translates the carriage in the direction of arrow 12.

After the electrostatic latent image is transferred to the dielectric sheet, a conveyor (not shown) advances the dielectric sheet to development station D. Development station D is positioned after platen 20. Hence, electrostatic transfer is terminated when drum 10 reaches the end of its travel, i.e. one half a revolution of drum 10 beyond the end of platen 20. Development station D includes a magnetic brush development system, indicated generally by the reference numeral 32. The magnetic brush development system advances magnetic particles into contact with the electrostatic latent image on dielectric sheet 26. A hopper 34 stores a supply of magnetic particles 36 therein. Magnetic particles 36 are dispensed from hopper 34 onto tubular member 38. Preferably, tubular member 38 is made from a non-magnetic material, such as aluminum. An elongated magnetic member 40 is mounted rotatably interiorly of tubular member 38. Tubular member 38 is stationary and as magnetic member 40 rotates, magnetic particles 36 are transported into contact with the electrostatic latent image formed on dielectric sheet 26.

After the electrostatic latent image formed on dielectric sheet 26 has been developed with magnetic particles, a conveyor (not shown) advances dielectric sheet 26 to fusing station E having a fusing system indicated generally by the reference numeral 42. An exemplary fusing system 42 is a cold roll pressure system including a pair of rollers 44 and 46. The dielectric sheet with the powder image thereon passes between rollers 44 and 46. Rollers 44 and 46 apply pressure on the powder image to per-

manently affix it to the dielectric sheet. Preferably, rollers 44 and 46 are made from chrome plated as stainless steel. Rollers 44 and 46 rotate in a suitable direction so as to continue to advance dielectric sheet 26. After fusing, dielectric sheet 26 advances to the catch tray (not shown). When the sheet is in the catch tray, it may be subsequently removed therefrom by the machine operator.

The process heretofore described is only one embodiment of the reproducing machine of the present invention. Turning now to Figure 2, there is shown another embodiment thereof. As shown in Figure 2, photoconductive web or belt 48 has one end thereof secured to the frame of the printing machine with the other end thereof wound about a take-up spool 50. Belt 48 is entrained about roller 52 which is mounted on a movable carriage (not shown) so as to translate the direction of arrow 54. The carriage may be driven in the manner heretofore described with reference to the embodiment of Figure 1 or by any other suitable means. As roller 52 translates in the direction of arrow 54, take-up spool 50 rotates in the direction of arrow 56 so as to take-up belt 48 as roller 52 translates in the direction of arrow 54. Once again both the photoconductive belt and original document are stationary at the point of exposure. Initially, charging station A passes over successive segments of the photoconductive belt. Charging station A includes a corona generating device, indicated generally by the reference numeral 58, which charges the photoconductive surface of belt 48 to a relatively high substantially uniform potential. Corona generator 58 is mounted on the carriage translating roller 52 so as to move therewith to continuously charge segments of belt 48.

Thereafter, exposure station B passes over the charged portions of belt 48. At exposure station B, an original document 60 is positioned face-down on a stationary transparent platen 62. Exposure station B includes lamp 64 and lens strip 66 mounted on the carriage supporting roller 52. Hence, as lamp 64 advances in the direction of arrow 54, it illuminates incremental width strips of original document 60. The light rays transmitted from these incremental width strips pass through lens strip 66 to form a light image thereof which is projected onto successive charged portions of photoconductive belt 48. This forms an electrostatic latent image corresponding to the original document being illuminated.

Next, as roller 52 translates in the direction of arrow 54, the electrostatic latent image recorded belt 48 pass through transfer station C. At transfer station C, the electrostatic latent image recorded on belt 48 is transferred to a dielectric sheet 68. The dielectric sheet advances at twice the linear velocity of roller 52. In this way, the relative linear velocity between the photoconductive surface of belt 48 and the dielectric sheet, at the point of contact, is zero. Dielectric sheet 68 passes between conductive rubber roller 70 and photoconductive belt 48. Preferably, roller 70 is electrically grounded. Alternatively, a voltage source may be connected between electrode 70 and the conductive backing of belt 48. The voltage source applies an electrical field between the conductive backing and electrode 70. The electrical field supplied by the voltage source is of a suitable magnitude and polarity to transfer the electrostatic latent image from the photoconductive surface of belt 48 to the dielectric sheet. A non-conductive rubber pad 72 is disposed prior to roller 70. Roller 70 and pad 72 are also secured to the carriage supporting roller 52 so as to translate therewith. Alternatively, roller 70 and pad 72 may be mounted stationarily, at any point along the path of movement of roller 52. Preferably, in this configuration, roller 70 and pad 72 are located just prior to take-up roller 50, i.e. just prior to the lead edge of the electrostatic latent image recorded on the photoconductive surface of belt 48 being entrained thereabout. This enables the dielectric sheet feeder to be positioned beneath belt 48 reducing the overall size of the printing machine. After the electrostatic latent image is transferred to the dielectric sheet, the dielectric sheet advances to development station D.

At development station D, a magnetic brush development system, indicated generally by the reference numeral 74, advances magnetic particles into contact with the electrostatic latent image formed on the dielectric sheet. Preferably, the developer material, i.e. the magnetic particles, is a single component development material. Magnetic brush development system 74 includes a hopper 76 for holding a supply of magnetic particles 78 therein. The magnetic particles are dispensed from the hopper onto stationary tubular member 80. Preferably, tubular member 80 is made from a non-magnetic material such as aluminum. An elongated magnetic member 82 is mounted rotatably interiorly of tubular member 80. In this manner, a magnetic field is created which attracts the magnetic particles to tubular member 80. As magnetic member 82 rotates, the magnetic particles are transported into contact with the electrostatic latent image formed on the dielectric sheet.

After the electrostatic latent image formed on the dielectric sheet has been developed with magnetic particles, the dielectric sheet is advanced to fusing station E. Fusing station E, indicated generally by the reference numeral 84, includes a pair of rollers 86 and 88. The dielectric sheet with the powder image thereon passes between rollers 86 and 88. The rollers are preferably made from chrome plated stainless steel or any other material which can apply sufficient pressure to permanently affix the powder image to the dielectric sheet.

After fusing, a conveyor (not shown) advances the dielectric sheet with the powder

image permanently affixed thereto to a catch tray (not shown). In the catch tray, the dielectric sheet, i.e. the finished copy sheet, may be readily removed therefrom by the machine operator.

Referring now to Figure 3, there is shown still another embodiment of the reproducing machine of the present invention. The embodiment depicted in Figure 3 also employs a photoconductive belt. As shown thereat, belt 90 advances from a supply spool 92 about roller 94 onto a take-up spool 96. Roller 94 is mounted on a carriage so as to translate in the direction of arrow 100. As roller 94 translates in the direction of arrow 100, take-up spool 96 rotates so as to take up any slack in the photoconductive belt. However, when roller 94 returns to its initial position, the same initial segment of the photoconductive belt is disposed beneath the platen supporting the original document. Hence, the same segment of the photoconductive belt is continually reused to produce a multiplicity of copies. After many thousands of copies have been made, this segment of the photoconductive belt may become fatigued. In order to obviate this problem, supply spool 92 operating in conjunction with take-up spool 96 will advance a new segment of photoreceptor material which, in turn, is also entrained about roller 94. With roller 94 fixed in the initial position, take-up spool 96 rotates to advance a new section of the photoconductive belt 90 from supply spool 92 into its operative position. Once again, photoconductive belt 90 and the original document are stationary during the exposure process.

Initially, charging station A passes over successive portions of photoconductive belt 90. At charging station A, a corona generating device, indicated generally by the reference numeral 98, charges the successive portions of the photoconductive surface of belt 90 to a relatively high, substantially uniform potential. Corona generating device 98 is mounted on the carriage supporting roller 94 so as to translate therewith.

At exposure station B, an original document 104 is positioned on a stationary transparent platen 106. The exposure station includes lamps 108 and lens strip 110 secured to the carriage translating idler roller 94. As lamp 108 translates in the direction of arrow 100, it illuminates incremental widths of original document 104. The incremental width light rays transmitted from document 104 pass through lens strip 110 so as to form an incremental width light image thereof. These light images, in turn, are projected onto successive charged portions of photoconductive belt 90 so as to selectively discharge these portions. This records an electrostatic latent image on photoconductive belt 90.

Next, electrostatic latent image recorded on photoconductive belt 90 is transferred to dielectric sheet 112 at transfer station C. Dielectric sheet advances in the direction of arrow 100 at twice the linear velocity of roller 94. In this manner, the relative linear velocity between roller 94 and dielectric sheet 112 is moving at zero velocity at the point of contact. Dielectric sheet 112 passes between photoconductive belt 90 and a conductive rubber roller 114. Preferably roller 114 is electrically grounded. However, in the alternative, a voltage source may be connected between roller 114 and the conductive backing of photoconductive belt 90. The electrical field applied by the voltage source is of a suitable magnitude and polarity to transfer the electrostatic latent image from the photoconductive surface of belt 90 to the dielectric sheet. A non-conductive rubber pad 116 is positioned prior to roller 114. After roller 94 has translated one half a revolution beyond the end of stationary platen 106, the entire electrostatic latent image is effectively transferred to dielectric sheet 112. At this point, the dielectric sheet moves through the development station and fusing stations previously discussed with regard to Figure 2. The dielectric sheet, with the powder image permanently affixed thereto, is then advanced to a catch tray for subsequent removal from the printing machine by the operator.

One skilled in the art will appreciate that many other techniques may be employed in conjunction with the embodiment shown in Figure 3. For example, the photoconductive member itself may be the copy sheet with successive portions thereof being cut to size after development and fusing rather than being advanced about the take-up spool. Alternatively, the image portions of the photoconductive member may be transferred directly to a copy sheet forming a visible image of the original document. In these latter configurations, each portion of the photoconductive member is used over rather several thousand times prior to being replenished.

In recapitulation, it is evident that the reproducing machine of the present invention employs a stationary photoconductive member and a stationary original document. A dielectric sheet moves into contact with the photoconductive member so that the electrostatic latent image recorded thereon may be transferred thereto. The processing stations associated with the photoconductive member translate relative thereto. A system of this type readily lends itself for usage in desk type low cost reproducing machines.

Claims

1. Electrophotographic reproducing machine including means (20) for supporting substantially stationarily an original document (18) being reproduced, a photoconductive member (10), charging means (16), exposing means (22, 24), for recording a latent image on said photoconductive member, transfer means (28) for

transferring the latent image to a sheet (26), the exposing means (22, 24) being translated to effect scanning of the document, characterised in that

the photoconductive member (10) is translated such that the relative velocity between the portion of the stationary document (18) being scanned by the exposing means (22, 24) and the increment of the photoconductive member (10) receiving the image from the exposing means is zero, and

the charging means (16), the transfer means (28) and the exposing means (22, 24) are translated together with the photoconductive member (10).

2. A reproducing machine according to claim 1, wherein said supporting means (20) comprises a substantially stationary platen for supporting the original document (18) thereon.

3. A reproducing machine according to claim 1 or 2, further including a dielectric sheet (26) and means for advancing said dielectric sheet (26) into contact with said photoconductive member (10) to transfer the latent image from said photoconductive member (10) thereto.

4. A reproducing machine according to claim 3, further including, means (32) for developing the latent image recorded on said dielectric sheet (26) to form a powder image thereon, and means (42) for fixing substantially permanently the powder image to said dielectric sheet (26).

5. A reproducing machine according to claim 3 or 4, wherein said dielectric sheet (26) translates at a linear velocity such that the relative linear velocity between said photoconductive member (10) and said dielectric sheet (26) at the point of contact is substantially zero.

6. A reproducing machine according to claim 3, 4 or 5, wherein said charging means (16) and said exposing means (22, 24) translate at the same linear velocity as said photoconductive member (10).

7. A reproducing machine according to any preceding claim when appendant to claim 6, wherein said exposing means (22, 24) includes a light source (22) arranged to iluminate the original document (18) supported on said platen (20) and a lens strip (14) arranged to receive the light rays transmitted from the original document (18) and to project a light image thereof onto the charged portion of said photoconductive member (10).

8. A reproducing machine according to any preceding claim, wherein said photoconductive member (10) is a drum (20).

9. A reproducing machine according to any preceding claim, wherein said photoconductive member (10) is a flexible belt (68).

Patentansprüche

1. Elektrofotografischer Vervielfältigungsapparat mit einer Einrichtung (20) zum im wesentlichen stationären Halten eines Original-Schriftstückes (18), das vervielfältigt wird, mit einem fotoleitfähigen Teil (10), einer Aufladeeinrichtung (16) und einer Belichtungseinrichtung (22, 24) zum Aufzeichnen eines latenten Abbildes auf dem genannten fotoleitfähigen Teil, und mit einer Übertragungseinrichtung (28) zum Übertragen des latenten Abbildes auf ein Blatt (26), wobei die Belichtungseinrichtung (22, 24) verschoben wird, um ein Abtasten des Schriftstückes zu bewirken, dadurch gekennzeichnet, daß der fotoleitfähige Teil (10) derartig verschoben wird, daß die Relativgeschwindigkeit zwischen dem von der Belichtungseinrichtung (22, 24) abgetasteten Abschnitt des stationären Schriftstückes (18) und dem das Abbild von der Belichtungseinrichtung aufnehmenden Inkrement des fotoleitfähigen Teils (10) gleich Null ist, und daß die Aufladeeinrichtung (16), die Übertragungseinrichtung (28) und die Belichtungseinrichtung (22, 24) zusammen mit dem fotoleitfähigen Teil (10) verschoben werden.

2. Vervielfältigungsapparat nach Anspruch 1, in welchem die genannte Halteeinrichtung (20) eine im wesentlichen stationäre Platte zum Abstützen des Original-Schriftstückes (18) darauf umfaßt.

3. Vervielfältigungsapparat nach Anspruch 1 oder 2, welcher ferner ein dielektrisches Blatt (26) und Mittel zum Vorwärtsbewegen des genannten dielektrischen Blatts (26) bis zum Kontakt mit dem genannten fotoleitfähigen Teil (10) umfaßt, um das latente Abbild von dem genannten fotoleitfähigen Teil (10) auf das dielektrische Blatt (26) zu übertragen.

4. Vervielfältigungsapparat nach Anspruch 3, welcher weiterhin eine Einrichtung (32) zum Entwickeln des auf dem genannten dielektrischen Blatt (26) aufgezeichneten latenten Abbildes zur Bildung eines Pulver-Abbildes darauf und eine Einrichtung (42) zum im wesentlichen permanenten Fixieren des Pulver-Abbildes auf dem genannten dielektrischen Blatt (26) umfaßt.

5. Vervielfältigungsapparat nach Anspruch 3 oder 4, in welchem das genannte dielektrische Blatt (26) sich mit einer linearen Geschwindigkeit derart translatorisch bewegt, daß die relative Lineargeschwindigkeit zwischen dem genannten fotoleitfähigen Teil (10) und dem genannten dielektrischen Blatt am Berührungspunkt im wesentlichen gleich Null ist.

6. Vervielfältigungsapparat nach Anspruch 3, 4 oder 5, in welchem die genannte Aufladeeinrichtung (16) und die genannte Belichtungseinrichtung (22, 24) sich mit der gleichen linearen Geschwindigkeit wie der genannte fotoleitfähige Teil (10) translatorisch bewegen.

7. Vervielfältigungsapparat nach irgendeinem vorhergehendem Anspruch, in welchem die genannte Belichtungseinrichtung (22, 24) eine Lichtquelle (22), die zur Beleuchtung des auf der genannten Platte (20) abgestützten Original-Schriftstücks angeordnet ist, und eine Linsen-Anordnung (24) aufweist, die angeordnet ist, die vom Original-Schriftstück (18)

übertragenen Lichtstrahlen zu empfangen und ein Licht-Abbild derselben auf den aufgeladenen Teil des genannten fotoleitfähigen Teils (10) zu projizieren.

8. Vervielfältigungsapparat nach irgendeinem vorhergehenden Anspruch, in welchem der genannte fotoleitfähige Teil (10) eine Trommel (20) ist.

9. Vervielfältigungsapparat nach irgendeinem vorhergehenden Anspruch, in welchem der genannte fotoleitfähige Teil (10) ein flexibles Band (68) ist.

Revendications

1. Machine de reproduction électrophotographique, comprenant un moyen (20) pour supporter d'une façon sensiblement fixe un document original (18) en cours de reproduction, un élément photoconducteur (10), un moyen de charge (16), un moyen d'exposition (22, 24) pour enregistrer une image latente sur l'élément photoconducteur, un moyen de transfert (28) pour transférer l'image latente à une feuille (26), le moyen d'exposition (22, 24) étant animé d'un mouvement de translation pour effectuer le balayage du document, caractérisé en ce que:

l'élément photoconducteur (10), subit une translation de façon que la vitesse relative entre la partie du document fixe (18) en cours de balayage par le moyen d'exposition (22, 24) et l'incrément de l'élément photoconducteur (10) recevant l'image à partir du moyen d'exposition soit nulle; et

le moyen de charge (16), le moyen de transfert (28) et le moyen d'exposition (22, 24) sont animés ensemble d'un mouvement de translation avec l'élément photoconducteur (10).

2. Machine de reproduction selon la revendication 1, où le moyen de support (20) comprend une platine sensiblement fixe pour supporter le document original (18) sur son dessus.

3. Machine de reproduction selon la revendication 1 ou la revendication 2, comportant en outre une feuille diélectrique (26) et un moyen pour faire avancer la feuille diélectrique (26) afin de l'amener en contact avec l'élément photoconducteur (10) et transférer l'image latente de l'élément photoconducteur (10) à ce élément.

4. Machine de reproduction selon la revendication 3, comprenant en outre un moyen (32) pour développer l'image latente enregistrée sur la feuille diélectrique (26) afin de former une image en poudre sur son dessus, et un moyen (42) pour fixer d'une manière sensiblement permanente l'image en poudre sur la feuille diélectrique (26).

5. Machine de reproduction selon la revendication 3 ou la revendication 4, où la feuille diélectrique (26) se déplace à une vitesse linéaire telle que la vitesse linéaire relative entre l'élément photoconducteur (10) et la feuille diélectrique (26) au point de contact est sensiblement nulle.

6. Machine de reproduction selon la revendication 3, ou la revendication 4 ou la revendication 5, où le moyen de charge (16) et le moyen d'exposition (22, 24) se déplacent à la même vitesse linéaire que l'élément photoconducteur (10).

7. Machine de reproduction selon l'une quelconque des revendications précédentes lorsqu'elles dépendent de la revendication 6, où le moyen d'exposition (22, 24) comprend une source lumineuse (22) disposée de manière à éclairer le document original (18) supporté par la platine (20) et une bande (14) formant lentille disposée de manière à recevoir les rayons lumineux transmis à partir du document original (18) et à projeter une image lumineuse de cette bande sur la partie chargée de l'élément photoconducteur (10).

8. Machine de reproduction selon l'une quelconque des revendications précédentes, où l'élément photoconducteur (10) est un tambour (20).

9. Machine de reproduction selon l'une quelconque des revendications précédentes, où l'élément photoconducteur (10) est une courroie flexible (68).

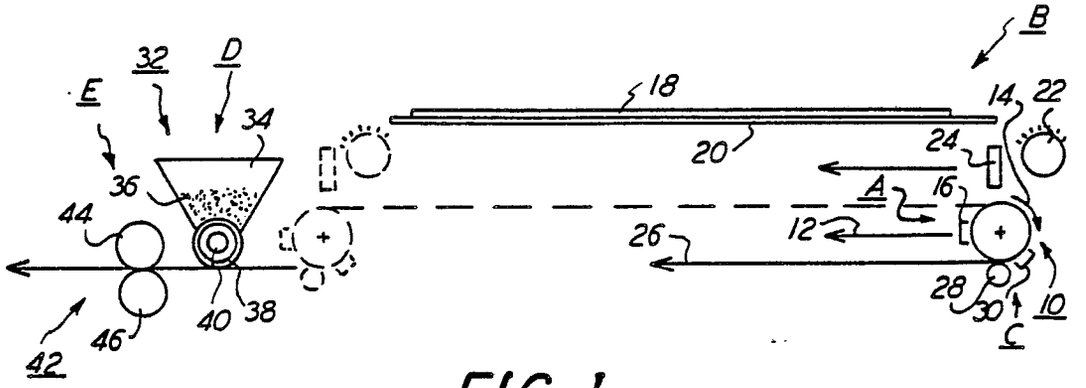

FIG. 1

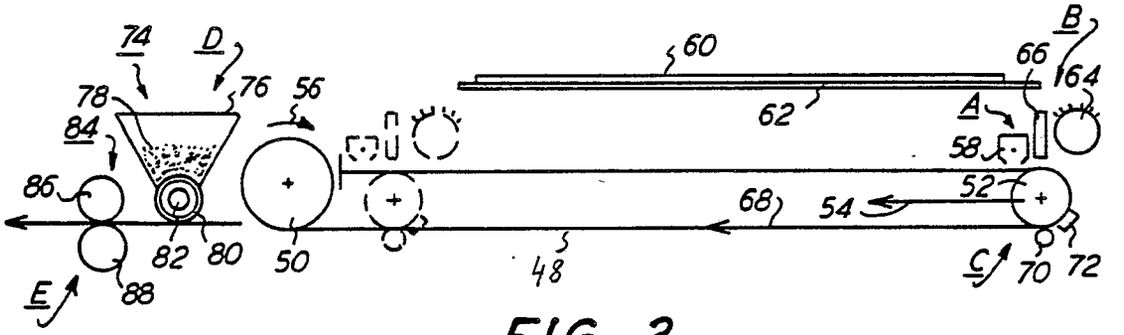

FIG. 2

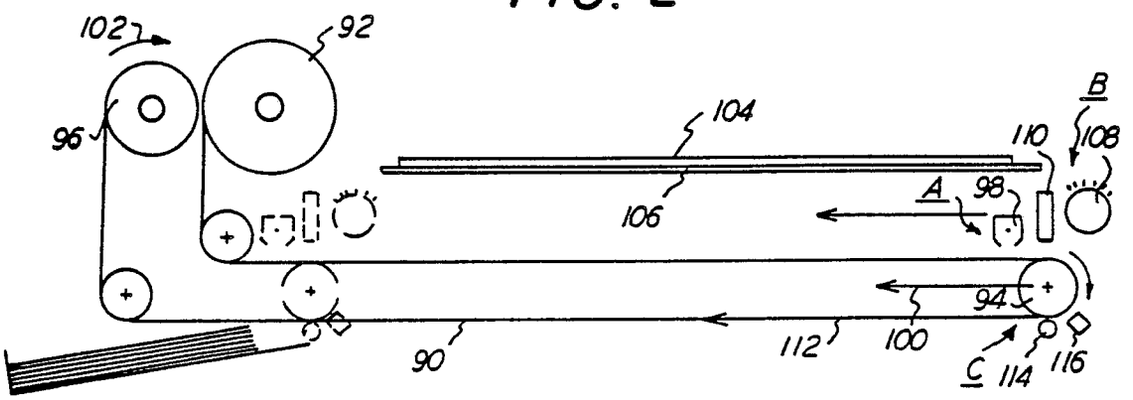

FIG. 3