(19) Europäisches Patentamt
European Patent Office
Office européen des brevets

(11) Publication number: **0 093 090**
B1

(12) **EUROPEAN PATENT SPECIFICATION**

(45) Date of publication of patent specification: **21.01.87**

(51) Int. Cl.[4]: **B 65 D 51/28**

(21) Application number: **83830076.2**

(22) Date of filing: **06.04.83**

(54) **A closure for bottles and the like of the type including a breakable bottom reservoir to break during use.**

(30) Priority: **23.04.82 IT 2166582 u**
23.04.82 IT 2166682 u

(43) Date of publication of application:
02.11.83 Bulletin 83/44

(45) Publication of the grant of the patent:
21.01.87 Bulletin 87/04

(84) Designated Contracting States:
BE CH DE FR GB LI NL SE

(56) References cited:
DE-A-2 363 054
DE-A-2 625 175
FR-A-1 568 362
GB-A-2 019 820
US-A-3 802 604

(73) Proprietor: **CAPSULIT S.r.l.**
C.so Indipendenza 6
I-20122 Milan (IT)

(72) Inventor: **Rizzardi, Napoleone**
Via Zambelletti 10
I-20129 Milan (IT)

(74) Representative: **La Ciura, Salvatore**
Via Francesco Sforza 5
I-20122 Milano (IT)

EP 0 093 090 B1

Note: Within nine months from the publication of the mention of the grant of the European patent, any person may give notice to the European Patent Office of opposition to the European patent granted. Notice of opposition shall be filed in a written reasoned statement. It shall not be deemed to have been filed until the opposition fee has been paid. (Art. 99(1) European patent convention).

Courier Press, Leamington Spa, England.

Description

This invention relates to a closure for bottles and the like, of the type including a reservoir housed within the bottle neck and containing a material, generally as a powder, which is allowed to drop into the liquid in the bottle by breakage of the bottom in said reservoir.

The bottom breakage is effected by pressure exerted on the presser member of cylindrical shape, entering the reservoir by a slantwise cut end, this operation being carried out according to known techniques following the opening of a guarantee aluminum or also plastic crown-cap.

In this known arrangement (DE—A—27 38 551), the presser member is made together with the reservoir, and the whole is placed on the bottle neck, the guarantee crown-cap being successively applied by rolling about said neck.

However, such a closure has substantial disadvantages, some of which will be hereinafter illustrated.

A first disadvantage consists of the difficulty in removing an aluminum crown-cap rolled about the bottle neck, operation which very often causes wounds to the operator's hands and which cannot always be manually carried out.

Known plastic crown-caps, as used to this end, also require complicated operations for removal thereof, because of tending to remain entrapped about the bottle neck.

Upon removal of the guarantee crown-cap, the cylindrically shaped presser member is acted upon, which member will be in the following simply referred to as piercing plunger, for the breakage of the reservoir bottom in which it is housed.

The reservoir content, generally powdery material, is then allowed to fall down into the bottle, mixing with the liquid material therein. Thus, in order to use the mixture thereby obtained, the bottle inlet has to be freed, by removing said reservoir which together with the piercing plunger remains embedded within the bottle neck. This is also a difficult manual operation because of the poor available gripping and high seal or friction between the reservoir and bottle, so that the aid of mechanical means is often resorted to, such as for example a suitable tool acting as a lever between the respective contact edges of the bottle and reservoir inlet.

A closure in accordance with the pre-characterising part of claim 1 is known from US—A—3802604 which discloses a plurality of embodiments of a closure for a container with a reservoir.

The closure comprises an inner threaded cap surmounted by a cover cap provided with a piercing plunger and with a removable tear-strip which encircles the adjacent edge portion of the container and the inner cap.

Such a closure is planned for not being removed from the container, as the mixture is dispensed through a dispensing spout.

DE—A—2625175 discloses several embodiments of a closure, with a reservoir.

In one of such embodiments, the closure comprises a cap with a hollow cylinder and with a tear-strip.

In the use of the closure, the bottom of the reservoir has not to be broken.

FR—A—1568362 discloses a complicated closure with reservoir, comprising two threaded caps.

After having broken the bottom of the reservoir, only the outer cap has to be removed from the container.

Therefore, it clearly appears that the above described known closures, as well as other closures which have not been herein mentioned for the sake of brevity, but which do not anyhow show substantial differences as to functionality from those shown, have a poor practicability and require quite complicated operations for the removal thereof.

It is the object of the present invention to obviate the above mentioned disadvantages, by providing a closure for bottles and the like which on one hand is capable of offering safety against any possible casual tamperings, and on the other hand enables by simple and ready operations to pierce through the reservoir therein contained and remove the whole from the bottle to which it is applied.

In order to achieve these objects, the closure for bottles and the like, according to the present invention is characterised by the features in the characterising part of claim 1.

Further characteristics of a closure for bottles and the like according to the present invention will become apparent from the following description referred to a preferred embodiment thereof, as shown in the accompanying drawings, in which:

Figure 1 is an exploded axonometric view with parts removed of a closure according to the present invention, showing the application thereof onto a bottle;

Figure 2 is a front and partly cutaway view showing the closure of Figure 1 mounted on the bottle; and

Figure 3 is a view showing the same closure with the median strip removed and the reservoir pierced through by the presser member.

Referring to said figures of the accompanying drawings, reference numeral 1 denotes a crown-cap closure preferably of plastic material, according to the present invention and including a reservoir 2 with breakable bottom 3 whch is accommodated within the neck of a bottle 4. Said reservoir 2, containing a generally powdery material which is allowed to fall down into the liquid in said bottle 4 by piercing through of the bottom thereof, is of well known type and comprises a circumferentially continuous ridge 5 for interfering with the inner portion of the neck of said bottle 4, and an annular edge 6 overlapping the annular edge 7 of the bottle neck.

Internally of and coaxially therewith said crown-cap 1 has a preferably hollow piercing plunger 8, made in a unitary body with said crown-cap, having the free end 9 slantwise cut

and housing in said reservoir 2.

The crown-cap 1 comprises a skirt 10 having at its lower edge 11 an inner annular ridge 12 for engagement upon transitory elastic deformation with the bottle inlet edge, as shown in Figure 2.

Of course, instead of said continuous annular ridge 12, a discrete number of discontinuous ridges could be provided, still obtaining the same result, which is that to assure a seal between said crown-cap 1 and bottle 4.

At the middle portion of skirt 10, and preferably at a height from the top portion of the bottle inlet edge to beyond the top portion of the annular edge 6 of reservoir 2, there is provided a tearing removable strip 15, as defined by two circumferential parallel weakening or breaking lines 16 and 17, a gripping tab or tongue 13 being provided for aiding in tearing.

According to a feature of the present invention, said tearing removable strip 15 is internally and at a suitable height provided with at least one continuous ridge 15' (or a plurality of discontinuous ridges) for abutment with the top portion of the annular edge 6 of the reservoir 2 and suitable to prevent the skirt 10 from vertically moving when a casual pressure is exerted on the top portion 14 of the crown-cap 1, and accordingly to prevent any accidental piercing of reservoir 2.

The removal of said median strip 15 provided the separation of the lower portion 18 from the top portion 19 of the skirt 10 said portion 18 remaining entrapped about the bottle neck, but falling down at its convex portion, so ad to facilitate the successive lowering of the portion 19 of said skirt for piercing through said reservoir 2. Thus, upon removal of said strip 15, a suitable pressure should only be exerted on the top portion 14 of the crown-cap 1 to break the breakable bottom 3 of reservoir 2 by the piercing plunger 8 which is integral with said crown cap, said bottom 3 remaining attached for a short length to the sidewall of the reservoir at the top portion of the slantwise cut end of the piercing plunger, as shown in Figure 3.

Upon piercing (Figure 3), the reservoir 2 remains embedded within the crown-cap 2, both due to friction between the outer portion of the piercing plunger 8 and the inside of the reservoir, and due to friction between the edge 6 of said reservoir and the inner surface of the portion 19 of the skirt 10 of said crown-cap, so that the reservoir can be removed together with the crown-cap 1 from the bottle 4 by exerting a simultaneous tractive and torsional stress on said portion 19 of skirt 10 which is to this end provided as knurled. Thus, the removal of the reservoir 2 is greatly facilitated because of the substantial increase in gripping due to the top portion 19 of the skirt of the guarantee crown-cap.

It should be pointed out that the useful height of the portion 19 of said skirt is preferably greater than or equal to the distance as vertically measured between the corners of the slantwise cut end 9 of the piercing plunger 8, and this to provide a nearly complete breakage of the bottom 3 of reservoir 2 and accordingly to facilitate the fall of the powdery material therein contained into the bottle 4.

Although in the figures of the accompanying drawings the lower edge 11 of the skirt 10 has been located immediately below the annular edge 12, such a skirt 10 could be of course extended to bring said edge 11 in abutment with the convex portion of bottle 4.

Of course, many changes in detail can be made to the crown-cap closure according to the present invention, without departing for this from the scope of the invention as claimed.

Claims

1. A closure for bottles and the like of crown-cap type, including a reservoir (2) with breakable bottom (3) housed within the bottle neck and comprising an annular flange (6) seating on the edge (7) of the bottle inlet, and a preferably hollow piercing plunger (8) in unitary body with the outer crown-cap (1), entering said reservoir (2) by a slant-wise cut end (9), the skirt (10) of the outer crown-cap (1) having provided thereon a tearing removable strip (15), characterised in that the skirt (10) of said crown-cap is internally provided with continuous or discontinuous ridges (12) for engagement with the bottle inlet edge after transitory elastic deformation (7), that the tearing removable strip (15), which is defined by two circumferential parallel weakening or breaking lines (16, 17) is located at an intermediate portion of the skirt (10) and carries internally continuous or discontinuous ridges (15') for abutment with the top portion of the annular flange (6) of said reservoir (2), in order to avoid any accidental piercing through of the reservoir (2) in case of casual pressures being exerted on the crown-cap (1), so that by removing said strip (15) and exerting a suitable pressure on the outer crown-cap (1), said reservoir (2) is pierced through, which reservoir remains embedded within said crown-cap (1) and can be readily removed therewith, freeing the bottle inlet for use of the content thereof.

2. A closure according to claim 1, wherein said reservoir (2) is embedded to the crown-cap (1) owing to friction between the outside of the piercing plunger (8) and the reservoir inside, and friction between the annular edge (6) of said reservoir (2) and the inner surface of the top portion (19) of said crown-cap skirt (10).

3. A closure according to claim 1 or 2, wherein the height of said top portion (19) of the crown-cap skirt (10) is greater than or equal to the distance as vertically measured between the corners of the slantwise cut end (9) of said piercing plunger (8) in order to provide a nearly complete breakage of the reservoir bottom (3), thereby facilitating the fall down of the content thereof into the underlying bottle.

Patentansprüche

1. Verschluss für Flaschen und Ähnliches, ausgeführt als Stopfenkapsel, umfassend einen Be-

hälter (2) mit brechbarem Boden (3), der innerhalb des Flaschenhalses liegt, einen ringförmigen Flansch (6), angebracht auf dem Rand (7) der Flaschenöffnung, sowie einen vorzugsweise hohlen Durchstosskolben (8), der einen einzigen Körper mit der äusseren Kapsel (1) bildet und dessen schräggeschnittenes Ende (9) in den Behälter (2) eintritt; der Rand (10) der äusseren Kapsel (1) mit einem abziehbaren Streifen (15) versehen; dadurch gekennzeichnet, dass der äussere Rand (10) der Kapsel innen kontinuierliche oder lückende Spitzen (12) hat, die mit dem Rand der Flaschenöffnung (7) nach vorübergehender elastischer Verformung greifen; dass der abziehbare Streifen (15), bestimmt durch zwei periphere parallele Abschwächungs- und Reisslinien (16, 17), in Entsprechung des Mittelteils des äusseren Randes (10) angeordnet ist und an seiner Innenseite kontinuierliche oder lückende Spitzen (15') hat, die gegen den oberen Teil des ringförmigen Flansches (6) des Behälters (2) anliegen, um jedes zufällige Durchstossen des Behälters (2) zu verhindern im Fall von versehentlichem Druck auf die Kapsel (1), sodass bei Entfernen des Streifens (15) und angemessenem Druck auf die äussere Kapsel (1) der Behälter (2) durchstossen wird, wobei der Behälter innerhalb der Kapsel (1) stekken bleibt und mit dieser leicht entfernt werden kann, sodass die Flaschenöffnung befreit und der Inhalt verfügbar wird.

2. Verschluss gemäss Anspruch 1, wobei der Behälter (2) dadurch in der Kapsel (1) lagert, dass zwischen der Aussenseite des Durchstosskolbens (8) und der Innenseite des Behälters Reibung besteht und Reibung besteht zwischen dem ringförmigen Flansch (6) des Behälters (2) und der Innenfläche des oberen Teils (19) des äusseren Randes (10) der Kapsel.

3. Verschluss gemäss Ansprüchen 1 oder 2, wobei die Höhe des oberen Teils (19) des äusseren Randes (10) grösser ist als oder gleich dem vertikal gemessenen Abstand zwischen den Ekken des schräggeschnittenen Endes (9) des Durchstosskolbens (8), damit ein nahezu vollständiger Bruch des Behälterbodens (3) erzielt und so das Fallen des Behälterinhalts in die darunter befindliche Flasche erleichtert wird.

Revendications

1. Un système de fermeture pour bouteilles et similaires, de type couvercle à couronne, comprenant un réservoir (2) à fond à rompre (3) logé à l'intérieur du col de la bouteille et comprenant une bride annulaire (6) placée sur le bord (7) du goulot de la bouteille et un plongeur perceur préférablement creux (8) incorporé dans le couvercle à couronne externe (1), pénétrant dans le dit réservoir (2) par une extrémité taillée obliquement (9), la bordure (10) du couvercle à couronne extérieur (1) étant entourée d'une bande à détacher par arrachement (15) caractérisée par le fait que la bordure (10) de ce couvercle à couronne est intérieurement dotée d'ondulations (12) continues ou discontinues pour constituer une prise sur le bord (7) du goulot de la bouteille après déformation élastique transitoire, la bande à détacher par arrachement (15), définie par deux lignes (16, 17) circonférencielles parallèles d'affaiblissement ou de rupture, étant située dans une partie intermédiaire de la bordure (10) dotée d'ondulations internes (15') continues ou discontinues pour aboutement avec la partie supérieure de la bride annulaire (6) du dit réservoir (2), de manière à éviter tout percement accidentel du réservoir (2) en cas de pressions qui pourraient éventuellement être exercées sur le couvercle à couronne (1), de sorte qu'en retirant la dite bande (15) et qu'en exerçant une pression appropriée sur le couvercle à couronne extérieur (1) le dit réservoir (2) est percé, lequel réservoir demeure enfoncé dans le dit couvercle à couronne (1) et peut être retiré facilement avec ce dernier, libérant le goulot de la bouteille et permettant d'utiliser le contenu du réservoir.

2. Une fermeture selon la revendication 1 où le dit réservoir (2) est enfoncé dans le couvercle à couronne (1) par friction entre la portion externe du plongeur perceur (8) et l'intérieur du réservoir et par friction entre le bord annulaire (6) du dit réservoir (2) et la surface interne de la portion supérieure (19) de la bordure du dit couvercle à couronne (10).

3. Une fermeture selon les revendications 1 ou 2 où la hauteur de la dite portion supérieure (19) de la bordure du couvercle à couronne (10) est plus grande que ou égale à la distance mesurée verticalement entre les coins de l'extrémité taillée obliquement (9) du dit plongeur perceur (8) de manière à produire une rupture à peu près complète du fond du réservoir (3), facilitant ainsi la chute du contenu dans la bouteille placée au-dessous.

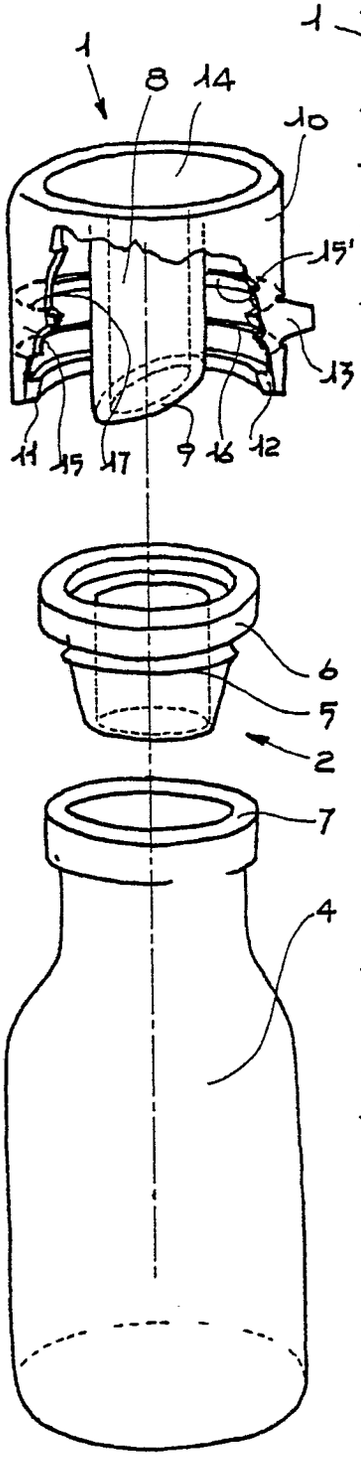

Fig.1

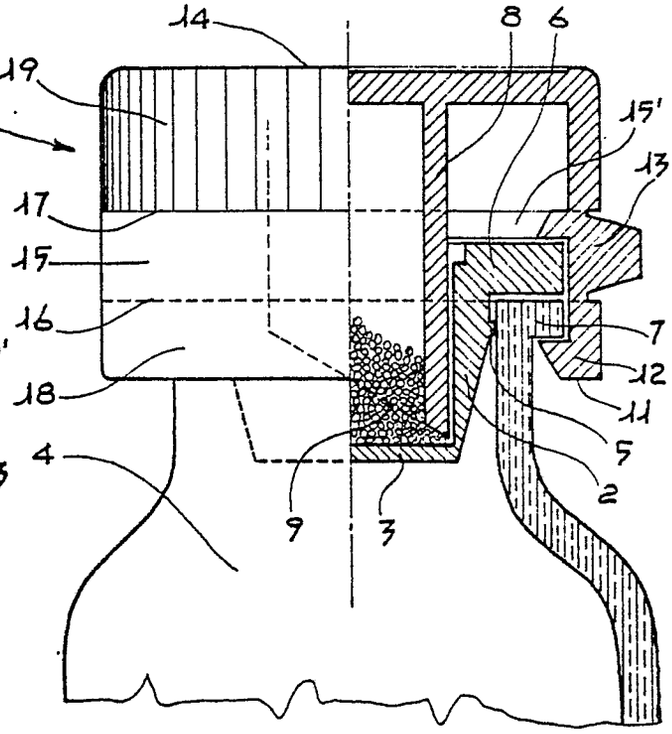

Fig.2
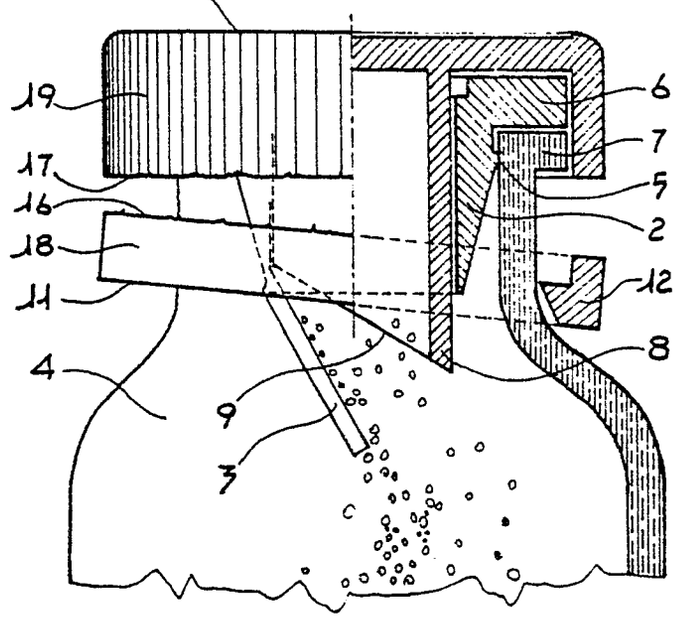
Fig.3