(19) Europäisches Patentamt
European Patent Office
Office européen des brevets

(11) Publication number : **0 154 800 B2**

(12) **NEW EUROPEAN PATENT SPECIFICATION**

(45) Date of publication of the new patent specification : **19.01.94 Bulletin 94/03**

(51) Int. Cl.[5] : **H01B 7/08,** H01R 23/66

(21) Application number : **85101107.2**

(22) Date of filing : **20.03.84**

(54) **Method of making electrical ribbon cable harness.**

(30) Priority : **21.04.83 US 487377**

(43) Date of publication of application : **18.09.85 Bulletin 85/38**

(45) Publication of the grant of the patent : **02.08.89 Bulletin 89/31**

(45) Mention of the opposition decision : **19.01.94 Bulletin 94/03**

(84) Designated Contracting States : **DE FR GB IT NL SE**

(56) References cited :
EP-A- 0 104 013
DE-C- 1 959 131
FR-A- 2 361 761
GB-A- 625 051
US-A- 3 768 067

(60) Publication number of the earlier application in accordance with Art. 76 EPC : **0 123 417**

(73) Proprietor : **MOLEX INCORPORATED**
2222 Wellington Court
Lisle Illinois 60532 (US)

(72) Inventor : **Ponn, Timothy R.**
835 Gerten Avenue
Aurora Illinois 60505 (US)

(74) Representative : **Slight, Geoffrey Charles et al**
Graham Watt & Co. Riverhead
Sevenoaks Kent TN13 2BN (GB)

EP 0 154 800 B2

Description

This invention relates to a method of making electrical ribbon cable harness comprising flat electrical ribbon cable and, more particularly, to a method involving terminating an insulated ribbon cable to an electrical connector assembly by displacement of the insulation surrounding the cable conductors.

Electrical ribbon cable has gained wide acceptance in a variety of applications involving the interconnection wiring of electrical and electronic assemblies. It is particularly suitable for low voltage applications such as in the interconnection of telecommunications or computer subassemblies where a plurality of discrete electrical signals are required to be transmitted from one subassembly to another. Typically in these applications, the interconnection ribbon cable is terminated at each end with electrical connectors having the capability of being mounted on printed circuit boards by connection to a plurality of spaced wire pins which have been wave-soldered to the board circuitry, for example.

In order to ensure that ribbon cables of various origins are compatible with generally accepted printed circuit board design configurations, industry conventions have developed such that ribbon cable is manufactured with standard center spacing of the cable conductors. Generally, the conductor center spacings which have been adopted are those spacings which have been found preferable for standardized pin separation in the design of printed circuit board circuitry layout. These spacings are typically on the order of several conductor-diameters in magnitude. Accordingly, it is common practice to manufacture ribbon cable by an extrusion process which coats the conductors with a relatively uniform layer of insulation and joints adjacent pairs of conductors in spaced-apart relationship with a web of extruded insulation. The webs need only have a thickness sufficient to maintain the individual conductors in uniform separation and assure the integrity of the cable as a unitary structure during handling and use.

For economy of manufacture, it has been found desirable to extrude ribbon cable with a predetermined large number of conductors, and then separate the conductors by tearing to obtain a cable having a lesser width where fewer interconnection circuits are needed. By such a method, manufacturing efficiency is enhanced, in as much as only one extrusion die and related machinery are necessary to manufacture ribbon cable of various widths. To facilitate the uniform tearing of the master cable into cables having lesser width, it is common practice to extrude the master cable with lengthwise grooves formed in the webs equi-distantly between adjacent pairs of conductors.

One method of terminating interconnection wiring that has gained wide acceptance in the above-mentioned applications because of its efficiency in assembly is mass termination by insulation displacement. In the insulation displacement process, the conductors are not stripped of their covering insulation prior to termination, whether they are discrete insulated wires or in ribbon cable form. Instead, the insulation is severed and displaced by the respective terminal to which the conductor is electrically connected. Connectors having the capability of insulation displacement termination are disclosed, for example, in US-A-4,217,022 and typically comprise a row of stamped, slotted metal terminals with V-shaped ends for receiving and making electrical contact with the respective conductors of the interconnection wiring or cable.

Where ribbon cable is used instead of discrete insulated wire, it is common practice to prepare the cable by removing the insulation webs for a distance from the cable end or along an intermediate portion of the cable at the locations where connectors are to be installed. Preparing the ribbon cable by removing insulation web portions is desirable for the reason that it permits the cable to be terminated as if it were composed of a plurality of discrete wires. More specifically, by removal of the webs in the region of the connector termination, less force is required to press the cable conductors into their respective terminals and a more reliable connection between the cable conductors and terminals can be assured. Additionally, if the cables are not prepared, there is a tendency for overpacking of the terminal interface area with excess insulation causing withdrawal forces to be imposed on the conductors as a result of the latent resiliency of the insulation. This condition can, with time, result in inadequate electrical conductivity at the terminal-to-conductor interface of an operative connector. The step of preparing the ribbon cable, however, involves the use of specialized equipment and added investment of time. Additionally, where the cable user is unequipped to prepare the cable but requires multiple connector terminations within a single cable span, the cable must be specially prepared by the cable manufacturer, resulting in increased cost to the cable user.

FR-A-2,361,761 describes a hitherto known connector assembly for flat flexible ribbon cable that aims to overcome a different problem, namely that with such cable which is to be mass terminated by insulation displacement, the conductors are not always accurately spaced apart to align with the insulation displacement terminals of a connector. To this end the assembly includes a clamping member which positions the conductors of the cable in the required spaced relationship with respect to one another prior to engaging the cable with the terminals, which are carried by a further part of the connector.

EP-A-0 104 013 claiming a priority of 31.08.82 but published on 28.08.84, which is prior art according to Article 54(3) EPC, describes a multi-contact elec-

trical connector for connecting a plurality of discrete wires to respective insulation displacement terminals. The connector comprises an open topped housing formed in one piece and shaped to define terminal receiving cavities below wire receiving portions, with a wire holding means in each portion. The wire receiving ends of the terminals extend into the wire receiving portions and the wires are inserted downwardly, one into each of the wire receiving portions to be terminated and at the same time gripped by its holding means.

The present invention provides a method of connecting an electrical ribbon cable to an electrical connector, said connector including a housing with a plurality of terminal receiving cavities formed therein, a plurality of terminals, one mounted in each cavity, each terminal having a conductor engaging end with an insulation displacement slot formed therein, said cable including a plurality of parallel, spaced-apart conductors, each of said conductors being embedded in a continuous generally planar layer of insulation with a plurality of webs integrally formed between said conductors, the method comprising the steps of aligning the conductors over their respective insulation displacement slots and forcing the conductors downwardly laterally of their longitudinal axes so that the conductors are received in their respective slots and being characterised in that said housing is formed in one piece, with walls defining extensions of said terminal receiving cavities, the conductor engaging ends of the terminals being separated by said walls, in that said cable webs have grooves extending parallel to said conductors and in that said webs are forced against said walls to tear said webs along their grooves a short distance adjacent the connector so that said conductors are presented to said slots with a substantially uniform coating of insulation around that portion of their circumferences to be severed in the slots.

Some ways of carrying out the invention will now be described in detail with reference to drawings in which:

Fig. 1 is an end sectional view of a multiconductor flat cable for use in a method embodying the present invention;

Fig. 2 is a perspective view, partially in section, of the ribbon cable of Fig. 1 terminated to a typical insulation displacement type connector by a method embodying the present invention;

Fig. 3 is an end sectional view of a further multiconductor flat cable for use in a method embodying the present invention; and

Fig. 4 is a perspective view, partially in section, showing the ribbon cable of Fig. 3 terminated to a typical insulation displacement type connector by a method embodying the present invention.

Referring to the drawings and first to Fig. 1, there is shown a round-conductor ribbon cable 20 comprising electrical conductors 21 enveloped in a coating of insulation 22. Ribbon cable 20 may be made by an extrusion process whereby continuous lengths of conductors 21 are conveyed through a die which forms the insulation layer 22 in any desired cross-sectional configuration. Preferably, the conductors 21 are arranged in parallel side-by-side relationship, uniformly separated by webs of insulation 23 which have a thickness no more than that required to maintain the cable 20 as a unitary structure in handling and in use. Formed in the webs of insulation 23 are grooves 24 positioned in close proximity to one of the pair of conductors 21 between which each web 23 is formed. The grooves 24 permit manual or machine separation of the cable 20 into preselected conductor groupings, and additionally, they facilitate termination of the cable 20 without preparation, in a manner in accordance with the present invention which will, hereinafter, be described in greater detail.

Referring now to Fig. 2, a portion of the cable 20 shown in Fig. 1 is disclosed in association with an insulation displacement type connector, designated generally by the reference numeral 30. The connector 30 includes a rigid dielectric housing 31 into which are fitted a plurality of metal insulation displacement type terminals 32. Each terminal 32 is formed with a slotted V-shaped edge portion 33 adapted to receive an individual conductor 21. Molded integrally with the housing 31 and extending to a position immediately above the terminals 32 are a plurality of strain reliefs 35 configured with angled surfaces 36 which serve to guide the individual conductors 21 into position over their respective mating terminals 32. The strain reliefs 35 also serve to retain the conductors 21, within the slotted terminals 32 after termination. Because of their somewhat pointed configuration, the strain reliefs 35 initiate the severing of the ribbon cable webs 23 upon moving the cable towards the connector 30 in order to effect termination.

Turning now to Fig. 3, there is shown an alternative ribbon cable 40 for use in the method of the invention provided with web grooves 44 immediately adjacent to both sides of the individual conductors 41. As a result of the dual groove construction and, as best shown in Fig. 4, upon termination of the cable 40 to an insulation displacement connector 30, the webs 43 sever completely away from the conductors 41 in the flap-like manner for a suitable distance from the cable end or along an intermediate portion (not shown) of the cable 40. By this arrangement, the cable conductors 41 become, in effect, the equivalent of discrete insulated wires, and they can be terminated with relatively uniform severing of their insulation covering by the edge portions 33 of the terminals 32.

Upon termination of the ribbon cable 20 of Fig. 1, as best shown in Fig. 2, the cable 20 severs at each of the grooves 24 formed between adjacent pairs of conductors 21 as a result of piercing action imposed

on the webs 23 by the pointed strain reliefs 35 of the connector housing 31. As the cable conductors 21 are further forced into the terminals 32 of the connector 30, they rotate about their longitudinal axes due to the pivotal interaction of the webs 23 with the surfaces 33 of the terminals 32 and of the surfaces 36 of the strain reliefs 35. By the rotation of the conductors 21, the webs 23 are caused to trail the conductors 21 into the terminals 32 as final termination is achieved. Accordingly, the webs 23 do not interfere with the displacement of the insulation layer 22 adjacent the conductors 21 by the terminal edge surfaces 33. Additionally, there is no overpacking of the opposed terminal edges 33 with web insulation, thus avoiding the tendency for excess web insulation 23 to withdraw the conductors 21 from seated relationship with the terminals 32 as a result of the latent resiliency of the insulation 22. Upon termination of the alternative cable 40 of Fig. 3, as best shown in Fig. 4, the cable 40 severs at each of the grooves 44 formed at the juncture of the webs 43 with the conductors 41 as a result of piercing action imposed by the strain reliefs 35. After severance, the webs 43 completely dissociate from between the conductors 41 and will not enter the region of the opposed edges 33 of the connector terminals 32.

The grooves 24 and 44 are so configured and located as to permit severing of the webs 23 and 43 respectively, without exposing the conductors 21 and 41 to the environment or reducing the dielectric properties of the cable 20, 40. Also, the grooves are configured and positioned such that the conductors 21 and 41 have a substantially uniform thickness of insulation 22 and 42, respectively, after severance of the webs. In this manner, the cable 20 and 40 may be separated along its entire length to provide a cable of lesser width without reducing the dielectric properties of the cable as a result of excessive thinness of the insulative covering 22, 42 along the edges of the resultant cable. Additionally, the cables 20 and 40 do not require preparation, in order to effect termination at any position along a cable span. Accordingly, the cable user is not limited to placement of connectors only at cable sections which have been prepared by the cable manufacturer.

Claims

1. A method of connecting an electrical ribbon cable (20;40) to an electrical connector,

said connector (30) including a housing (31) with a plurality of terminal receiving cavities formed therein, a plurality of terminals (32), one mounted in each cavity, each terminal having a conductor engaging end with an insulation displacement slot (33) formed therein;

said cable including a plurality of parallel, spaced-apart conductors (21;41), each of said conductors being embedded in a continuous generally planar layer of insulation (22;42) with a plurality of webs (23;43) integrally formed between said conductors, the method comprising the steps of

aligning the conductors (21;41) over their respective insulation displacement slots (33) and

forcing the conductors downwardly laterally of their longitudinal axes so that the conductors are received in their respective slots (33) and being characterised in that

said housing (31) is formed in one piece, with each conductor engaging end extending out of the housing (31) and being separated by walls (35) defining extensions of said cavities, said walls (35) having upper free ends with angled surfaces (36) forming funnel-shaped conductor receiving openings communicating with said insulation displacement slots (33) in that

said cable webs (23,43) have grooves (24;44) extending parallel and adjacent to said conductors (21;41) and in that

said webs (23;43) are forced against the free ends of said walls (35) to tear said webs (23;43) along their grooves (24;44) a short distance adjacent the connector so that said conductors (21;41) are engaged and oriented by the angled surfaces (36) for presentation to said slots (33) with a substantially uniform coating of insulation around that portion of their circumferences to be severed in the slots (33) and in that

said conductors (21;41) after positioned in slots (33) are retained therein by the angled surfaces (36).

2. A method as claimed in claim 1 in which each web (23) has a single groove (24) formed proximate and adjacent to one of said conductors (21) such that after the webs (23) are torn, each conductor has a portion of the web extending from one of its sides, which web portion contacts the angled surfaces (36) and acting as a lever rotates the conductors (21) about their longitudinal axes as they are forced into their respective slots (33) in the terminals (32) the web portions trailing the conductors (21).

3. A method as claimed in claim 1 in which each web (43) has a second groove (44) running lengthwise of said conductors (41), said second groove is formed proximate and adjacent to the other end of said conductors (41) between which said webs (43) are formed and the cable conductors (41) are severed completely from the webs (43) as they are forced into their respective slots (33) in the terminals (32) and do not enter into the region between the opposed edges (33) of the slots

(33).

Patentansprüche

1. Verfahren zum Verbinden eines elektrischen Bandkabels (20;40) mit einem elektrischen Verbinder, bei dem

der Verbinder (30) ein Gehäuse (31) mit einer Mehrzahl in diesem gebildeter Anschlußteilaufnahmeräume aufweist, je eines einer Mehrzahl von Anschlußteilen (32) in jedem Raum angebracht ist, jedes Anschlußteil ein Leitereingriffsende mit einem in diesem gebildeten Isolierungsverdrängungsschlitz (33) aufweist,

das Kabel eine Mehrzahl paralleler, mit Abstand voneinander angeordneter Leiter (21;41) aufweist und jeder der Leiter in einer durchgehenden, im allgemeinen ebenen Isolationsschicht (22;42) mit einer Mehrzahl von Stegen (23;43) eingebettet ist, die einstückig zwischen den Leitern gebildet sind wobei das Verfahren die Schritte umfaßt, daß

die Leiter (21;41) über ihren entsprechenden Isolierungsverdrängungsschlitzen (33) ausgerichtet und

die Leiter nach unten quer zu ihrer Längsachse gedrückt werden, so daß die Leiter in den entsprechenden Schlitzen (33) aufgenommen werden, und dadurch gekennzeichnet ist, daß

das Gehäuse (31) in einem Stück gebildet ist, wobei jedes Leitereingriffsende aus dem Gehäuse (31) herausragt und durch Verlängerungen der Aufnahmeräume bildende Wände (35) abgetrennt ist und die Wände (35) obere freie Enden mit abgewinkelten Oberflächen (36) aufweisen, die trichterförmige, mit den Isolierungsverdrängungsschlitzen (33) in Verbindung stehende Leiteraufnahmeöffnungen bilden, daß

die Kabelstege (23,43) Nuten (24;44) aufweisen, die sich parallel zu den Leitern (21;41) und angrenzend an diese erstrecken, und daß

die Stege (23;43) gegen die freien Enden der Wände (35) gedrückt werden, um die Stege (23;43) entlang ihren Nuten (24;44) ein kurzes an den Verbinder angrenzendes Stück aufzutrennen, so daß die Leiter (21;41) von den abgewinkelten Oberflächen (36) für eine Darbietung gegenüber den Schlitzen (33) mit einer im wesentlichen gleichmäßigen Isolierungsbeschichtung um den in den Schlitzen (33) zu durchtrennenden Bereich ihres Umfangs erfaßt und ausgerichtet werden, und

daß die Leiter (21;41) nach Positionierung in Schlitzen (33) in diesen durch die abgewinkelten Oberflächen (36) gehalten sind.

2. Verfahren nach Anspruch 1, bei dem jeder Steg (23) eine einzelne Nut (24) aufweist, die nahe angrenzend an einen der Leiter (21) gebildet ist, derart, daß, nachdem die Stege (23) aufgetrennt sind, jeder Leiter einen von einer seiner Seiten ausgehenden Bereich des Steges aufweist, welcher Stegbereich die abgewinkelten Oberflächen (36) berührt und als Hebel wirkend die Leiter (21) um ihre Längsachsen dreht, wenn sie in ihre entsprechenden Schlitze (33) in den Anschlußteilen (32) mit den Leitern (21) nachlaufenden Stegbereichen eingedrückt werden.

3. Verfahren nach Anspruch 1, bei dem jeder Steg (43) eine zweite Nut (44) aufweist, die in Längsrichtung der Leiter (41) verläuft, die zweite Nut nahe angrenzend an den anderen der Leiter (41) gebildet ist, zwischen denen die Stege (43) gebildet sind, und die Kabelleiter (41) vollständig von den Stegen (43) getrennt werden, wenn sie in ihre entsprechenden Schlitze (33) in den Anschlußteilen (32) gedrückt werden, und nicht in den Bereich zwischen den einander gegenüberliegenden Rändern (33) der Schlitze (33) gelangen.

Revendications

1. Procédé de connexion d'un câble ruban électrique (20,40) à un connecteur électrique,

ce connecteur (30) comprenant un boîtier (31) dans lequel sont ménagées plusieurs cavités de logement de bornes, plusieurs bornes (32) montées à raison d'une dans chaque cavité, chaque borne comportant une extrémité de contact avec un conducteur dans laquelle est ménagée une fente à déplacement d'isolation (33),

le câble comprenant plusieurs conducteurs espacés entre eux et parallèles (21,41), chacun de ces conducteurs étant noyé dans une couche continue et sensiblement plane d'isolation (22,42) comportant, venues de matière, plusieurs âmes formant pont (23,43) situées entre les conducteurs,

ce procédé consistant :

à aligner les conducteurs (21,41) au-dessus de leurs fentes associées à déplacement d'isolation (33) et

à appliquer de force les conducteurs vers le bas, latéralement par rapport à leurs axes longitudinaux, de façon que ces conducteurs se logent dans les fentes associées (33)

et étant caractérisé

en ce que le boîtier (31) est réalisé en une seule pièce, chaque extrémité de contact avec un conducteur s'étendant à l'extérieur du boîtier (31) et étant séparée par des parois (35) définissant des prolongements des cavités, ces parois (35) ayant des extrémités supérieures libres avec des

surfaces inclinées (36) formant des ouvertures en forme d'entonnoir pour la réception des conducteurs, ces ouvertures communiquant avec les fentes à déplacement d'isolation (33), en ce que les âmes (23,43) du câble présentent des rainures (24,44) parallèles et adjacentes aux conducteurs (21,41) et en ce que les âmes (23,43) sont forcées contre les extrémités libres des parois (35), afin de déchirer les âmes (23,43), le long de leurs rainures (24,44), sur une courte distance, à proximité immédiate du connecteur, si bien que les conducteurs (21,41) viennent en contact avec les surfaces inclinées (36) et sont orientés par celles-ci de manière à être présentés aux fentes (33) avec un revêtement d'isolation sensiblement uniforme autour de la portion de leurs circonférences devant être coupées dans les fentes (33), et en ce que les conducteurs (21,41), après avoir été mis en position dans les fentes (33), sont retenus dans ces fentes par les surfaces inclinées (36).

2. Procédé suivant la revendication 1 caractérisé en ce que chaque âme (23) présente une rainure unique (24) formée à proximité immédiate de l'un des conducteurs (21) de telle façon que, après que les âmes (23) ont été déchirées, chaque conducteur comporte une partie de l'âme s'étendant à partir de l'un de ses côtés, cette partie de l'âme venant en contact avec les surfaces inclinées (36) et agissant en tant que levier pour faire tourner les conducteurs (21) autour de leurs axes longitudinaux, tandis qu'ils sont forcés dans leurs fentes respectives (33) dans les bornes (32), les parties des âmes s'étendant à l'arrière des conducteurs (21).

3. Procédé suivant la revendication 1, selon lequel chaque bande formant pont (43) comporte une seconde rainure (44) s'étendant dans le sens de la longueur des conducteurs (41), cette seconde rainure est ménagée à proximité de l'autre des conducteurs (41) entre lesquels cette bande formant pont est réalisée, et en position adjacente à cet autre conducteur, et les conducteurs (41) du câble sont complètement séparés, par sectionnement, des bandes formant pont (43) lorsqu'on les applique de force dans les fentes associées (33) des bornes (32) et n'entrent pas dans la zone située entre les bords opposés (33) de ces fentes (32).

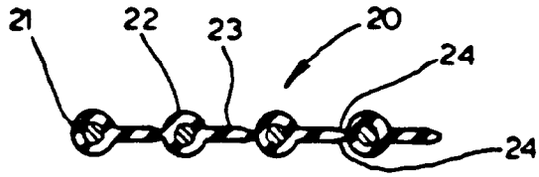

FIG. 1

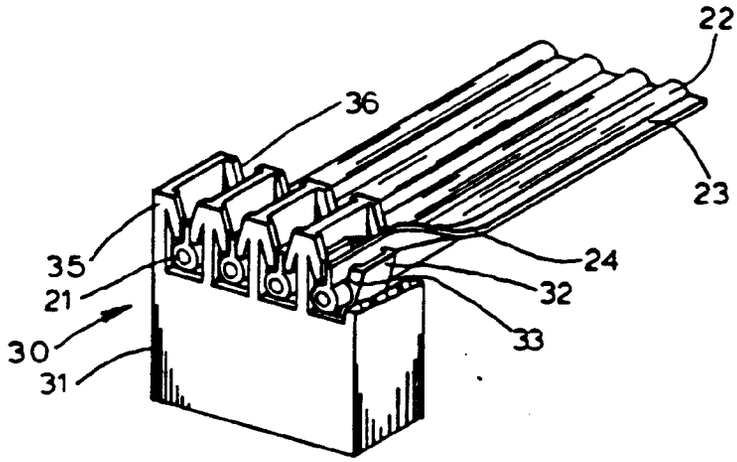

FIG. 2

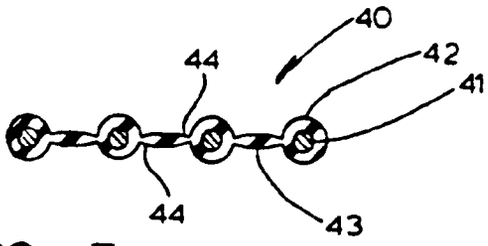

FIG. 3

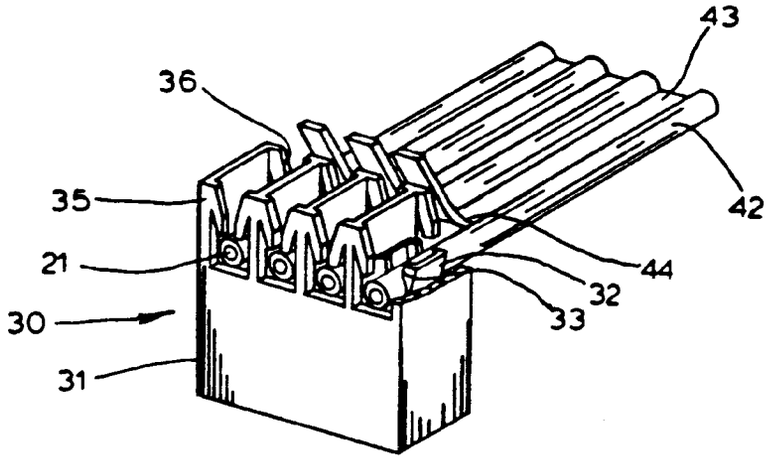

FIG. 4