(19) Europäisches Patentamt
European Patent Office
Office européen des brevets

(11) Publication number : **0 176 830 B2**

(12) **NEW EUROPEAN PATENT SPECIFICATION**

(45) Date of publication of the new patent specification : **06.07.94 Bulletin 94/27**

(51) Int. Cl.[5] : **B61L 5/06,** E01B 7/02

(21) Application number : **85111525.3**

(22) Date of filing : **12.09.85**

(54) **Electrically actuated mechanism for rail switch-points.**

(30) Priority : **03.10.84 IT 1261884**

(43) Date of publication of application : **09.04.86 Bulletin 86/15**

(45) Publication of the grant of the patent : **18.07.90 Bulletin 90/29**

(45) Mention of the opposition decision : **06.07.94 Bulletin 94/27**

(84) Designated Contracting States : **AT BE CH DE FR GB LI NL SE**

(56) References cited :
DE-A- 3 020 788

(56) References cited :
GB-A- 978 318
GB-A- 1 041 629
US-A- 1 641 578
US-A- 2 027 512

(73) Proprietor : **SASIB S.p.A.**
Via di Corticella, 87/89
I-40128 Bologna (IT)

(72) Inventor : **Gritti, Giovanni**
Via Silvagni 9
I-40137 Bologna (IT)

(74) Representative : **Porsia, Dino, Dr. et al**
c/o Succ. Ing. Fischetti & Weber
Via Caffaro 3/2
I-16124 Genova (IT)

EP 0 176 830 B2

Description

The invention relates to an electrically actuated mechanism for rail switchpoints.

An electrically actuated mechanism for rail switchpoints, in which two internal operating rods, a coupling member and a slide form actuating, checking, and locking devices, is described already in DE-A-3 020 788. The two internal operating rods of this mechanism are arranged side-by-side and parallel to each other. The slide overlies the internal operating rods and is slidable in the same longitudinal direction as the said rods. The coupling member is interposed between the two internal operating rods and the slide. The coupling member is coupled to the slide by driving members which are resiliently collapsible within certain limits and automatically disconnectable when said limits are exceeded. A locking clamp (Verschlußklammer) is hinged to each operating rod. These locking clamps have dove-tail-like heads with projections which cooperate with driving abutments of the coupling member). The coupling member is disengageable, on completion of the switchpoint movements in one direction, from the one of said locking clamps and in the opposite direction from the other locking clamp.

IT-A-12485/83 describes an electrically actuated mechanism for rail switchpoints, of the type wherein the actuating, checking, and locking devices are arranged within the container enclosing the swtichpoint mechanism, and the two internal operating rods cf this mechanism are arranged side-by-side and parallel to each other, whilst an elastic coupling device which acts as a force limiter performing the function of friction, trailing, approach, and stabilizing the points, is integrated in the internal operating rods, and the said mechanism comprises a slide which overlies the internal operating rods and is slidable in the same longitudinal direction as the said rods by the action of an electrical motor which is alternately rotable in either direction, the elastic coupling device being connected to the overlying slide through driving members which. are resiliently collapsible within certain limits and automatically disconnectable when said limits are exceeded.

This invention aims to further improve the electrically actuated swtichpoint mechanisms while maintaining all the advantages thereof in respect of the prior points mechanisms, particularly by providing an approach action, i.e., an action to force the closing blade with a predetermined presssure against the rail-stock, thus overcoming small obstacles that may be interposed between the blade and the rail stock, and permitting to ascertain the presence and the exact positioning of the rail-stock. This is obtained by the features of claim 1.

Those and other features of the invention and the advantages resulting therefrom will be more apparent from the following description of a preferred embodiment thereof, shown by way of non-limitating example in the single Figure of the accompanying sheet of drawing, which is an exploded perspective and partly sectional view of some mechanical components of an electrically-actuated switch-points mechanism according to the invention.

The switch-points mechanism according to the invention may be applied, similarly to the known Italian Railways switch-mechanisms, either to simple switch-points and to double-slip switch-points. The assembling of said mechanism and its connection to the switch-points are not shown in the drawing since they are known and obvious to those skilled in the art.

Anyway, it is to be reminded that the switch-points mechanism moves the switch-blades through external operating rods (not shown) which are connected by means of pivot pins to the corresponding internal operating rods T1 and T2 of the mechanism. The position of each blade-tip is re-transmitted to the switch-mechanism through similar external checking rods (not shown) connected by means of pivot pins to the corresponding internal checking rods C1 and C2 of the mechanism. The external operating rods and checking rods are connected to the switch-blades, preferably, by means of ball joints so as to permit a considerable ease of movement and eliminate stresses and friction losses which enhance wear and are detrimental to regularity.

The switch-points mechanism comprises a D.C. electrical motor (not shown) capable of rotating, alternately, in either direction. Two separate feeding conductors and one common return conductor are connected to said motor.

By applying the voltage to either one or the other of the feed windings, the rotation of the motor in either direction is obtained. This system enables a double direction of rotation with no need to provide the mechanism with a rotation reverser. Arranged on the return conductor within the container for the switch-point mechanism is a normally-closed switch (not shown) which opens upon insertion of a hand-control lever.

On the motor shaft there is keyed a pinion (not shown) that through a train of gears (not shown) moves a gearwheel 1 keyed on the shaft of a worm-screw 2 which meshes with a corresponding nut-screw of a slide 3 which is slidably mounted in suitable guides (not shown) to move in the same longitudinal direction as said worm-screw 2.

The slide 3 can effect longitudinal reciprocatory movements depending upon the direction of rotation of the worm-screw 2. The system comprising the worm-screw 2 and respective nut-screw is of the balls or rollers type, or the like, whereby it has a high efficiency and enables the use of a motor of much smaller power and size as well as a reduced wear of the moving members due to the absence of sliding fric-

tion.

The slide 3 is arranged above the two internal operating rods T1 and T2 and is connected to these rods by means of an elastic coupling device comprising a coupling member 4 having, preferably, a square-section parallelepipedal outer contour and is accommodated in a suitable seat between the two rods T1 and T2. Said coupling member 4, on the top side of which the slide 3 reciprocates slidingly, is formed with a cylindrical axial recess. Two cylindrical sliders 5 (only one of which is exposed) are slidingly accommodated within said cylindrical recess and are positioned in the opposite end portions of said recess, a compression spring 6 being interposed therebetween. Accommodated in a longitudinal slot of each slider 5 is a suitable shaped plate 7, 7′, which is thus pivotably mounted in the respective slider about the axis of a transverse pivot 8.

Each plate 7, 7′ has formed therein a suitably shaped slot slidably receiving a guide roller 9 which is solidary with the body of the coupling member 4. The rollers 9 are intended to prevent the pivotable plates 7, 7′ from rotating about their axes 8 during the normal operation.

The upper portion of each pivotable plate 7, 7′ is provided with a recess 10, 10′ and protrudes from the top side of said coupling member whereon said slide 3 reciprocates slidingly. Thrust rollers 11, 11′ mounted at the ends of the slide 3 and disposed transversely to the path of movement thereof will abut against said recesses 10, 10′.

When the slide 3 is moved in either direction, said rollers 11, 11′ will thrust against said pivotable plates 7, 7′ and the latter, being prevented from rotating about their axes 8, will resiliently transfer the thrust, through said sliders and compression spring 6, to the coupling member 4 and will displace it together with said slide 3.

The operating rods T1, T2 are displaced in either direction by the slide 3 by means of the coupling member 4 which, for this purpose, comprises end portions 12, 12′ co-operating with driving abutments 13, 13′ integral with the operating rods T1, T2, and with abutment projections 14, 14′ of drive members 15, 15′ for the operation of approach (facing the points), which are pivotably mounted on the operating rods T1, T2.

The front end portion 12 of the coupling member 4 co-operates with a stationary driving abutment 13 of the operating rod T2 and with a pivotable approach drive member 15 of the other operating rod T1. In a similar manner, to rear end portion 12′ of the coupling member 4 co-operates with a stationary driving abutment 13′ of the operating rod T1 and with a pivotable drive member 15′ of the other operating rod T2. Stated otherwise, at each end portion 12, 12′ of the coupling member 4, the two operating rods T1, T2 will present, alternately, one a pivotable approach drive member 15, 15′ and the other a stationary driving abutment 13, 13′.

The approach drive members 15, 15′ are pivotable about pins 16, 16′ secured to the respective operating rods T1, T2 and are formed with two opposite abutment projections 14, 14′ receiving the thrusts of the end portions 12, 12′ of the coupling member 4. On the opposite sides with respect to said abutment projections 14, 14′, the pivotable approach drive members 15, 15′ are formed with guide projections 17, 17′ slidable on the side walls 19, 19′ of the guide and support baseplate of the operating rods T1, T2 and which, on completion of the switch-points movement in either direction, are received alternately into recesses 18, 18′ formed in the side walls 19, 19′.

Formed in each approach drive member 15, 15′ is a cylindrical recess containing a push-rod 20, 20′ having a chisel-shaped tip protruding out of the head portion of the respective approach drive member and is pushed by a cup-shaped spring 21 against a respective roller 22, 22′ which is fixed to the respective operating rod T1, T2.

The switch-points mechanism according to the invention is provided with a points lock of the transverse lock type operatively similar to that of the Italian Railways switch-points mechanism used heretofore and, therefore, it has all the advantages thereof as to strength, reliability and safety. The locking action is obtained by means of a transverse locking member 23 provided with teeth 25, 26 which engage suitable notches 27, 28 of either one or the other of the internal operating rods T1, T2 and checking rods C1, C2 connected to the points in the closed position thereof, thus locking them in said position. More particularly, with reference to the position of the rods as shown in the drawing, the inclined flat of the rod T2 abuts against a similar inclined flat of the tooth 25 of the locking member 23 and pushes the latter laterally so that the tooth 26 will engage the notch 27 in the rod T1 in the closure position thereof, so as to lock it.

The switch-points mechanism is also provided with a check device which is similar to that of the heretofore known Italian Railways switch-point mechanisms, and the description thereof may, therefore, be omitted. This check device supplies, via suitable relays, the signals of positioning and locking of the points in the two positions thereof to a central control station. Said check device comprises a system of electrical knife contacts mounted on two shafts which are driven to the two end positions by said operating rods. The exact closed position of said contacts in either end position, is the confirmation of the exact positioning of the operating rods and transverse lock 23 and, therefore, of the exact positioning of the switch blades in either position, and of their firm locking. The check circuit only closes if the contacts of both shafts are in their proper positions.

The switch-point mechanism, moreover, compris-

es a limit-switch device the construction of which is apparent to those skilled in the art. Such a device is intended to open, upon completion of a switchpoint operation, the feed circuit to the motor and to pre-set the same for the successive reverse operation. Said limit switch device comprises two sets of knife-contacts (not shown) controlled by the slide 3 which, at the end of its movement, establishes the required electrical contacts for the function mentioned above, on either one or the other set of contacts.

The dimensions, construction and method of mounting of the switch-points mechanism according to the invention are, preferably, such as to permit its perfect interchange ability with the knonn Italian Railways P.64 switch-points mechanism without modifying the existing external members (foundation slabs, tierods, etc.). The stroke of the switch-blades may be maintained at 150 mm.

Operation

In each of the two positions to be assumed by the switch-points, the latter is locked by the point lock 23 arranged within the container for the swith-points; therefore, the sequence of operations for throwing over the points are as follows: movement of the spaced apart blade towards the stock-rail, removal of the point lock, throwing over of both blades, stopping of a blade in the close-by-position, pursuance of the movement of the spaced apart blade and new application of the point lock.

In the initial position shown in the drawing, the operating rod T1 is related to the spaced part blade and the operating rod T2 is related to the close-by blade that is rigidly locked by the transverse locking member 23 by means of the respective tooth 25 engaged in the notch 28 of said rod T2. Again with reference to the drawing, the operatin occurs in the direction of the arrow F. At the beginning, the end portion 12 of the coupling member 4 engages the abutment projection 14 of the approach drive member 15 which is pivoted on the rod T1 of the spaced apart blade and is spaced from the stationary drive member 13 of the rod T2 of the close-by blade. The pushing action of the coupling member 4 against the abutment projection 14 of the approach drive member 15 causes - through the pivot 16 - the displacement of the freely-movable rod T1. The rod T2 related to the closed blade is presently still and locked. After the rod T1 has moved as far as to permit the transverse locking member 23 to move away, the tooth 26 will reach a depressed or undercut flat 127, and the end portion 12 of the coupling member 4 will engage the driving abutment 13 of the rod 12, whereby the latter - pushed by said end portion 12 - starts moving.

From now on, the rods T1 and T2 move simultaneously until the rod T1 will be stopped when the blade to which it is connected engages the respective stock-rail. At this instant, the guide projection 17 of the approach drive member 15 will be in front of the recess 18 formed in the side wall 19 of the baseplate. The coupling member 4, moved by the slide 3, goes on pushing against the abutment projection 14 of the approach drive member 15 which, being prevented from advancing further, is obliged to rotate about its pivot 16. The pivot movement of the approach drive member 15 is hindered by the pin 22 which, abutting against the inclined flat of the chisel-shaped tip of the push-rod 20, tends to push said rod 20 into the recess therefor, thus compressing the respective cup-shaped spring 21 until, after a certain effort (approach effort) the push-rod 20 is pushed back to such an extent as to permit the approach drive member 15 to move angularly so that its guide projection 17 may enter the recess 18 in the side wall 19 of the baseplate, thus withdrawing the abutment projection 14 from the pushing action of the end portion 12 of the coupling member 4, whereby the latter may go on pushing against the driving abutment 13 of the operating rod T2, so that the latter may effect the point locking of the rod T1 and respective overlap.

The overlap permits the opened blade to effect limited displacements without affecting the locking of the closed blade.

The switch-points mechanism according to the invention has the advantage to take up, due to the elastic coupling device between the slide 3 and operating rods T1, T2, any displacement of the rod for the opened blade due to shocks or vibrations by moving its back to its original point-locking position. Upon the opposite operating manoeuvre, the slide 3 is moved in the direction opposite to that of the arrow F and causes movements which are similar but contrary to those described above. The switch-points mechanism according to the invention may be operated also manually by means of a handle to be coupled with a suitable clutch (not shown), which also opens an electrical contact in the operating circuit, thus preventing any simultaneous electrical operation.

Approach (facing the points)

As stated above, during the step of introduction of the guide projection 17 of the approach drive member 15 into the recess 18 in the sidewall 19 of the baseplate, the thrust of the slide 3 is taken up by the cup-shaped spring 21 which, thus, exerts an approach action, i.e. an action to force the respective blade against the rail-stock. By this forcing action of the blade against the rail-stock, is obtained, within certain limits, a check of the track-gauge. In fact, in case of absence of a contrasting action of the rail-stock, the blade of the rod T1 would override, whereby the notches of the respective operating rods and checking rods would not be in line with the transverse

locking member 23 and the latter would be prevented from effecting its point-locking stroke and actuating of the check device. Therefore, the action of the spring 21 makes the closing blade exert a pre-established pressure against the rail-stock, thus overcoming small obstacles which might be interposed between the blade and rail-stock and permitting to ascertain the presence and exact positioning of the rail-stock.

Disengagement of the slide

In the switch-points mechanism according to the invention, the elastic coupling between the slide 3 and operating rods T1, T2 aims to prevent any damage to the motor and members of the kinematic chain in case of an obstacle or strong resistance opposing to the movement of the blades. In fact, any accidental stop of the blades in an intermediate position during the switch-points operative movment, no matter the cause, makes the operating rods T1, T2 stop as well. In such a circumstance, since the motor goes on pushing the slide 3 through the worm-screw 2, the pins 11 and 11′ will pursue exerting a corresponding push against the shaped plates 7 or 7′. Said plates 7 or 7′, therefore, displace their sliders 5 or 5′ against the action of the spring 6 until the guide rollers 9 or 9′ will reach the end of the slot wherein they slide, where a suitable shaping of the slot causes a downward rotation of the respective plates 7 or 7′ about their pivots 8 or 8′. The slide 3 is thus disconnected from the operating rods T1, T2 and may terminate its stroke so as to actuate the limit-switch device to cut off the power supply to the motor and pre-set the circuit for the reverse operation. The restoration of the normal condition of the switch-points mechanism is obtained automatically by effecting the reverse operation. In fact, the backward movement of the slide 3 permits the shaped plates 7 or 7′, pushed upwards by suitable springs (not shown), to resume their original normal angular position, whereby restoring the elastic connection between the slide 3 and operating rods T1, T2.

Trailing (forcing open the points)

The switch-points according to the invention is of the forcing-open type, whereby should said switch-points be engaged by a train from the heel and in a wrong position, the displacement of the blade assembly would be obtained with no damage to the members, either internal or external, of the switch-points mechanism. The trailing action occurs as follows: the axle of the vehicle which engages the heel of the points in a wrong position will force the open blade and force it toward its respective rail-stock. Since the rod T1 of the now open blade is connected to the slide 3 through the elastic coupling device, the slide 3 is urged to move in the same direction as the open blade and respective operating rod T1. The connection between the slide 3 and worm-screw 2, however, is made irreversible by means of a stabilizing device (not shown) whereby the slide 3 cannot be driven by the rod T1. In these conditions, the pin 11′ solidary with the slide 3, which is unmovable in its position, exerts a reactive force on the plate 7′ which, through the slider 5′, causes a compression of the spring 6. The guide roller 9′, therefore, moves along the slot of the plate 7′ until it reaches the end of said slot where, as stated above, a suitable shaping urges the plate 7′ downwards by pivoting it about its pivot 8. Thus, the coupling member 4 is disengaged from the slide 3 and may slide, under the pushing action of the rod T2, as far as to actuated the limit-switch device and cut off the power supply to the motor. As a result, the operating rod T1 connected to the coupling member 4 is, in turn, disconnected from the slide 3 and the switch-points frame may resume its operational movement with no damage to the components. In the reverse movement, the slide 3 moves back and brings the shaped plate back to its original position and re-establishes the elastic coupling between the slide 3 and rod T1. Therefore, the capability of trailing the points affords the re-establishment of the normal operating conditions by means of a successive operative command, with no need of a local intervention. It is also to be noted that, in case of trailing the points, also with the switch-points mechanism of the invention, there is no possibility to check the positioning and points-locking in the switchpoints via the checking rods C1 and C2, as soon as the margin of overlap is nullified.

Permanent or Optional Uncapability of Trailing (Forcing Open the Points)

The switchpoints mechanism according to the invention may be made uncapable of trailing either optionally under command or permanently. The uncapability under command is effected by means of an electromagnet which is arranged within the container of the switchpoints mechanism and which, when not energized, latches the point-lock 23. The permanent uncapability is obtained by means of a mechanical device, which, however, permits the rod connected to the open blade to move to such an extent as to cause the loss of the electrical positional check of the switchpoints, but not the loss of the point-lock capability.

Claims

1. An electrically actuated mechanism for rail switchpoints, in which
two internal operating rods (T1, T2), a coupling

member (4) and a slide (3) are arranged within a container and form actuating, checking and locking devices,
whereby the two internal operating rods (T1, T2) of this mechanism are arranged side-by-side and parallel to each other,
the slide (3) overlies the internal operating rods and is slidable in the same longitudinal direction as the said rods (T1, T2) by the action of an electrical motor which is alternately rotatable in either direction, and the coupling member (4), which co-operates with stationary guide means (18, 19, 18′, 19′) is interposed between the two internal rods (T1, T2) and the slide,
the coupling member being coupled to the slide by driving members (5, 6, 7, 8, 9, 10, 11) which are resiliently collapsible within certain limits and automatically disconnectable when said limits are exceeded, and whereby further

- each internal operating rod has a stationary (13, 13′) and a pivotable (14, 14′) driving abutment,
- for one direction of movement the end portion (12, 12′) of the coupling member (4) co-operates with the pivotable driving abutment (14, 14′) on one of the internal operating rods (T1, T2) and the stationary driving abutment (13, 13′) on the other internal operating rod,
- the coupling member (4) is disengabable, on completion of the switchpoint movements in one direction, from the one internal rod (T1) by movement of its pivotable driving abutment, and in the opposite direction from the other internal operating rod (T2),
- the angular displacements of each pivotable driving abutment (14, 14′) to become disengagable from the coupling member (4) occurs against an opposing elastic action.

2. A switchpoints mechanism according to claim 1, characterized in that said pivotable driving member (14 or 14′) is arranged on an approach drive member (15 or 15′) which is pivotably mounted on the respective internal operating rod (T1, T2) and is maintained in the angular engagement position against the respective end portion (12, 12′) of the coupling member (4) by the action of a guide projection (17 or 17′) formed thereon and slidable on the side wall (19 or 19′) of the baseplate guiding the internal operating rods (T1, T2), said guide projection (17 or 17′) being adapted to enter, on completion of the movement of the respective internal operating rod (T1 or T2), a recess (18 or 18′) in the respective side wall (19 or 19) of the baseplate, thus permitting said approach drive member (15 or 15) to displace angularly so as to disengage its driving abutment (14 or 14′) from the coupling member (4) and to permit the latter to pursue its movement to the end of the stroke of the other internal operating rod (T1 or T2) to which it is coupled by means of a stationary driving abutment (13 or 13′).

3. A switchpoints mechanism according to claim 3, characterized in that the angular displacement of each pivotable approach drive member (15 or 15′) to disengage from the coupling member (4) occurs against an opposing elastic action obtained, for example, by means of a push-rod (20 or 20′) slidably guided in the approach drive member (15 or 15′), urged outwards by a spring (21) and co-operating, through its chisel-shaped outer end, with a roller (22 or 22′) rotatably mounted on the respective internal operating rod (T1 or T2).

4. A switchpoints mechanism according to one or more of the preceding claims, characterized in that said coupling member (4) has associated therewith two thrust members (for example, pins 11, 11 ′) fixed to the slide (3) and spaced from each other in the same longitudinal direction of the two operating rods (T1, T2), said thrust members (11, 11′) co-operating with two driving members (7, 7′) carried by the coupling member (4) and adapted to move resiliently to a certain extent, starting from a limit position in the longitudinal direction of the respective rod, and to disengage automatically from the corresponding thrust member of the slide when said extent has been exceeded.

5. A switchpoints mechanism according to claim 5, characterized by two sliders (5) slidably accommodated in a longitudinal recess of the coupling member (4) and pushed by an interposed compression spring (6) to initial positions against stop shoulders at the opposed ends of said recess in the coupling member (4), while said driving members of the coupling member (4) are formed by two shaped plates (7, 7′) which are arranged each in one of said sliders (5) so as to be rotatable about a transverse pivot (8) and comprise each a driving portion (10, 10′) protruding upwardly towards the overlying slide (3) through a longitudinal slot in the coupling member (4) and co-operating with an associated driving or thrust member (11, 11′) of said slide (3).

6. A switchpoints mechanism according to claims 5 and 6, characterized in that each pivotable shaped plate (7, 7′) is formed-in the end thereof op-

posed from the spring (6)-with a suitable shaped slot slidably receiving a guide roller (9) fixed to the coupling member (4) and maintaining the pivotable shaped plate (7, 7′) in its angular engagement position wherein its driving portion (10, 10′) may be engaged by the associated driving or thrust member (11, 11′) of the overlying slide (3), whereas when said shaped plate (7, 7′) moves resiliently towards the spring (6) the respective guide roller (9) displaces said plate (7, 7′) angularly to a disengagement position wherein its driving portion (10, 10′) disengages from the associated driving or thrust member (11, 11′) of the slide (3).

7. A switchpoints mechanism according to one or more of the preceding claims, characterized in that the coupling member (4) slidable together with the slide (3) is substantially of prismatic shape and is accommodated in a corresponding seat defined by the rear ends of the internal operating rods.

Patentansprüche

1. Elektrisch betätigter Mechanismus für Eisenbahnweichenzungen, bei dem zwei innere Betätigungsstangen (T1, T2) ein Kupplungselement (4) und ein Schlitten (3) innerhalb eines Behälters angeordnet sind und Betätigungs-, Prüf- und Sperreinrichtungen bilden,
wobei die beiden inneren Betätigungsstangen (T1, T2) dieses Mechanismus Seite an Seite und parallel zueinander angeordnet sind,
der Schlitten (3) über den inneren Betätigungsstangen liegt und in der gleichen Längsrichtung wie diese Stangen (T1, T2) durch die Wirkung eines wahlweise in beiden Drehrichtungen antreibbaren Elektromotors gleitverstellbar ist und das Kupplungselement (4), das mit stationären Führungseinrichtungen (18, 19, 18′, 19′) zusammenwirkt, zwischen den beiden inneren Betätigungsstangen (T1, T2) und dem Schlitten angeordnet ist,
das Kupplungselement mit dem Schlitten durch Antriebseinrichtungen (5, 6, 7, 8, 9, 10, 11) gekuppelt ist, die innerhalb bestimmter Grenzen elastisch zusammendrückbar und automatisch von der Verbindung lösbar sind, wenn diese Grenzen überschritten werden, und wobei ferner
   - jede innere Betätigungsstange einen festen (13, 13′) und einen schwenkbaren (14, 14′) Antriebsanschlag aufweist,
   - für eine Bewegungsrichtung der Endabschnitt (12, 12′) des Kupplungselementes (4) mit dem schwenkbaren Antriebsanschlag (14, 14′) an einer der inneren Betätigungsstangen (T1, T2) und dem festen Antriebsanschlag (13, 13′) an der anderen inneren Betätigungsstange zusammenwirkt,
   - das Kupplungselement bei Vollendung der Weichenzungenbewegungen in einer Richtung durch Bewegung seines schwenkbaren Antriebsanschlages von der einen inneren Stange (T1) und in der entgegengesetzten Richtung von der anderen inneren Betätigungsstange (T2) lösbar ist und
   - die Winkelverlagerungen jedes schwenkbaren Antriebsanschlages zur Lösung vom Kupplungselement gegen eine entgegengerichtete elastische Wirkung stattfinden.

2. Weichenzungenmechanismus nach Anspruch 1, dadurch gekennzeichnet, daß das schwenkbare Antriebselement (14 oder 14′) an einem Auffahr-Antriebselement (15 oder 15′) angeordnet ist, das an der zugehörigen inneren Betätigungsstange (T1, 72) schwenkbar montiert und in der Eingriffswinkelstellung mit dem entsprechenden Endabschnitt (12, 12′) des Kupplungselementes (4) durch die Wirkung eines Führungsvorsprunges (17 oder 17′) gehalten wird, der auf ihm ausgeformt und an der Seitenwand (19 oder 19′) der Grundplatte gleitverstellbar ist, die die inneren Betätigungsstangen (T1, T2) führt, wobei der Führungsvorsprung (17 oder 17′) dafür ausgelegt ist, am Ende der Bewegung der zugehörigen inneren Betätigungsstange (T1, T2) in eine Ausnehmung (18 oder 18′) in der entsprechenden Seitenwand (19 oder 19′) der Grundplatte einzutreten und dadurch eine Verlagerung des Auffahr-Antriebselementes (15 oder 15′) hinsichtlich seiner Winkelstellung zu gestatten, um dessen Antriebsanschlag (14 oder 14′) vom Kupplungselement (4) zu lösen und es letzterem zu ermöglichen, seine Bewegung bis zum Ende des Antriebshubes der anderen inneren Betätigungsstange (T1 oder T2) fortzusetzen, mit der es über einen feststehenden Antriebsanschlag (13 oder 13′) gekuppelt ist.

3. Weichenzungenmechanismus nach Anspruch 2, dadurch gekennzeichnet, daß die Winkelverstellung jedes schwenkbaren Auffahrantriebselementes (15 oder 15′) zur Lösung vom Kupplungselement (4) gegen eine elastische Wirkung erfolgt, die beispielsweise von einer Schubstange (20 oder 20′) erzeugt wird, welche gleitverstellbar im Auffahr-Antriebselement (15 oder 15′) geführt ist, durch eine Feder (21) nach außen gedrückt wird und mit einem meisselförmigen Außenende mit einer Rolle (22 oder 22′) zusammenwirkt, die drehbar an der zugehörigen inneren Betätigungsstange (T1 oder T2) montiert ist.

4. Weichenzungenmechanismus nach einem oder mehreren der vorhergehenden Ansprüche, dadurch gekennzeichnet, daß dem Kupplungselement (4) zwei Schiebeelemente (beispielsweise Zapfen 11, 11′) zugeordnet sind, die am Schlitten (3) befestigt und in Längsrichtung der beiden Betätigungsstangen (T1, T2) mit Abstand voneinander angeordnet sind, welche Schiebeelemente (11, 11′) mit zwei Antriebselementen (7, 7′) zusammenwirken, die vom Kupplungselement getragen werden und dafür ausgelegt sind, sich in einem vorbestimmten Ausmaß elastisch aus einer Grenzstellung in Längsrichtung der zugehörigen Stange zu bewegen und sich automatisch vom zugehörigen Schiebeelement des Schlittens zu lösen, wenn dieses Ausmaß überschritten wird.

5. Weichenzungenmechanismus nach Anspruch 4, gekennzeichnet durch zwei Gleitstücke (5), die in einer Längsausnehmung des Kupplungselementes (4) untergebracht und von einer zwischen ihnen angeordneten Druckfedern (6) in Ausgangsstellungen gegen Anschlagschultern an den entgegengesetzten Enden der Ausnehmung im Kupplungselement (4) gedrückt werden, wobei die Antriebseinrichtungen des Kupplungselementes (4) von zwei profilierten Platten (7, 7′) gebildet sind, die in je einem der Gleitstücke (5) um eine quer verlaufende Schwenkachse (8) drehbar angebracht sind und je einen Antriebsabschnitt (10, 10′) aufweisen, der nach oben in Richtung auf den darüberliegenden Schlitten (3) durch einen Längsschlitz im Kupplungselement (4) herausragt und mit einem zugeordneten Antriebs- oder Schiebeelement (11, 11′) am Schlitten (3) zusammenwirkt.

6. Weichenzungenmechanismus nach den Ansprüchen 4 und 5, dadurch gekennzeichnet, daß jede schwenkbare profilierte Platte (7, 7′) in dem von der Feder (6) abweisenden Ende mit einem passend geformten Schlitz versehen ist, der gleitbar eine Führungsrolle (9) aufnimmt, die mit dem Kupplungselement (4) fest verbunden ist und die schwenkbare profilierte Platte (7, 7′) in der angewinkelten Eingriffsstellung hält, in der ihr Antriebsabschnitt (10, 10′) mit dem zugeordneten Antriebs- oder Schiebeelement (11, 11′) des darüberliegenden Schlittens (3) in Eingriff kommen kann, wogegen die zugeordnete Führungsrolle (9) die Platte (7, 7′) dann, wenn sich diese profilierte Platte (7, 7′) elastich gegen die Feder (6) bewegt unter Winkelverstellung in eine Freigabestellung leitet, in der ihr Antriebsabschnitt (10, 10′) vom zugeordneten Antriebs- oder Schiebeelement (11, 11′) des Schlittens (3) freikommt.

7. Weichenzungenmechanismus nach einem oder mehreren der vorhergehenden Ansprüche, dadurch gekennzeichnet, daß das Kupplungselement (4), das gemeinsam mit dem Schlitten (3) gleitverstellbar ist, im wesentlichen eine prismatische Umrißform aufweist und in einem entsprechenden Sitz Aufnahme findet, der von den Hinterenden der inneren Betätigungsstangen bestimmt ist.

Revendications

1. Un mécanisme actionné électriquement pour un aiguillage de chemin de fer, dans lequel
deux tringles de manoeuvre internes (T1, T2), un organe d'accouplement (4) et un coulisseau (3) sont disposés à l'intérieur d'un boîtier et forment des dispositifs d'actionnement, de contrôle et de verrouillage,
les deux tringles de manoeuvre internes (T1, T2) de ce mécanisme étant disposées côte à côte et parallèlement l'une à l'autre,
le coulisseau (3) est placé au-dessus des tringles de manoeuvre internes et il peut coulisser dans la même direction longitudinale que les tingles (T1, T2) sous l'action d'un moteur électrique pouvant tourner alternativement dans un sens et dans l'autre, et l'organe d'accouplement (4), qui coopère avec des moyens de guidage fixes (18, 19, 18′, 19′), est interposé entre les deux tringles internes (T1, T2) et le coulisseau,
l'organe d'accouplement étant accouplé au coulisseau par des organes d'entraînement (5, 6, 7, 8, 9, 10, 11) qui peuvent s'effacer de façon élastique dans certaines limites et qui peuvent se désaccoupler automatiquement lorsque ces limites sont dépassées,
et dans lequel, en outre
   - chaque tringle de manoeuvre interne comporte une butée d'entraînement fixe (13, 13′) et une butée d'entraînement pivotante (14, 14′),
   - pour une direction de mouvement, la partie d'extrémité (12, 12′) de l'organe d'accouplement (4) coopère avec la butée d'entraînement pivotante (14, 14′) sur l'une des tringles de manoeuvre internes (T1, T2) et avec la butée d'entraînement fixe (13, 13′) sur l'autre tringle de manoeuvre interne,
   - à l'achèvement du mouvement de l'aiguillage dans une direction, l'organe d'accouplement (4) peut se désaccoupler de la tringle interne mentionnée en premier (T1), sous l'effet du mouvement de sa butée d'entraînement pivotante, et dans la direction opposée il peut se désaccoupler de l'autre tringle de manoeuvre interne (T2),

- les déplacements angulaires de chaque butée d'entraînement pivotante (14, 14′) pour permettre à la butée de se désaccoupler de l'organe d'accouplement (4) ont lieu contre une action élastique s'opposant à ces déplacements.

2. Un mécanisme d'aiguillage selon la revendication 1, caractérisé en ce que la butée d'entraînement pivotante (14 ou 14′) est montéesur un organe d'entraînement d'approche (15 ou 15′) qui est monté de façon pivotante sur la tringle de manoeuvre interne respective (T1, T2) et qui est maintenu dans la position angulaire d'appui contre la partie d'extrémité respective (12, 12′) de l'organe d'accouplement (4), par l'action d'une saillie de guidage (17 ou 17′) qui est formée sur lui et qui peut glisser sur la paroi latérale (19 ou 19′) de la plaque de base guidant les tringles de manoeuvre internes (T1, T2), cette saillie de guidage (17 ou 17′) étant conçue pour entrer, à l'achèvement du mouvement de la tringle de manoeuvre interne respective (T1 ou T2), dans une ouverture (18 ou 18′) dans la paroi latérale respective (19 ou 19′) de la plaque de base, permettant ainsi à l'organe d'entraînement d'approche (15 ou 15′) d'effectuer un déplacement angulaire de façon à dégager sa butée d'entraînement (14 ou 14′) par rapport à l'organe d'accouplement (4), pour permettre à ce dernier de poursuivre son mouvement jusqu'à l'extrémité de la course de l'autre tringle de manoeuvre interne (T1 ou T2) à laquelle il est accouplé au moyen d'une butée d'entraînement fixe (13 ou 13′).

3. Un mécanisme d'aiguillage selon la revendication 2, caractérisé en ce que le déplacement angulaire de chaque organe d'entraînement d'approche pivotant (15 ou 15′) pour se dégager de l'organe d'accouplement (4) a lieu contre une action élastique opposée, obtenue par exemple au moyen d'un poussoir (20 ou 20′) qui est guidé de façon coulissante dans l'organe d'accouplement d'approche (15 ou 15′), en étant sollicité vers l'extérieur par un ressort (21), et qui coopère, par l'intermédiaire de son extrémité extérieure biseautée, avec un galet (22 ou 22′) monté de façon tournante sur la tringle de manoeuvre interne respective (T1 ou T2).

4. Un mécanisme d'aiguillage selon une ou plusieurs des revendications précédentes, caractérisé en ce que l'organe d'accouplement (4) est associé à deux éléments de poussée (par exemple des galets 11, 11′) qui sont fixés au coulisseau (3) et sont mutuellement espacés dans la direction longitudinale des deux tringles de manoeuvre (T1, T2), ces éléments de poussée (11, 11′) coopérant avec deux organes d'entraînement (7, 7′) qui sont portés par l'organe d'accouplement (4), et sont conçus de façon à se déplacer de manière élastique sur une certaine étendue, à partir d'une position limite dans la direction longitudinale de la tringle respective, et à se dégager automatiquement de l'élément de poussée correspondant du coulisseau lorsque l'étendue précitée a été dépassée.

5. Un mécanisme d'aiguillage selon la revendication 4, caractérisé par deux éléments coulissants (5) logés de façon coulissante dans une cavité longitudinale de l'organe d'accouplement (4), et poussés par un ressort de compression intercalé (6) vers des positions initiales contre des épaulements de butée aux extrémités opposées de la cavité de l'organe d'accouplement (4), tandis que les organes d'entraînement de l'organe d'accouplement (4) sont formés par deux plaquettes de forme appropriée (7, 7′), chacune d'elles étant disposée dans l'un des éléments coulissants (5), de façon à pouvoir tourner autour d'un pivot transversal (8), et chacune d'elles comprenant une partie d'entraînement (10, 10′) qui fait saillie vers le haut en direction du coulisseau (3) se trouvant au-dessus, en traversant une fente longitudinale dans l'organe d'accouplement (4) et coopérant avec un organe d'entraînement ou de poussée associé (11, 11′) du coulisseau (3).

6. Un mécanisme d'aiguillage selon les revendications 4 et 5, caractérisé en ce que chaque plaquette pivotante de forme appropriée (7, 7′) présente, à son extrémité opposée au ressort (6), une ouverture de forme appropriée dans laquelle est logé de façon coulissante un galet de guidage (9) fixé à l'organe d'accouplement (4), maintenant la plaquette pivotante de forme appropriée (7, 7′) dans sa position angulaire d'accouplement, dans laquelle sa partie d'entraînement (10, 10′) peut venir en contact avec l'organe d'entraînement ou de poussée associé (11, 11′) du coulisseau (3) qui se trouve au-dessus, tandis que lorsque la plaquette de forme appropriée (7, 7′) se déplace de façon élastique vers le ressort (6), le galet de guidage respectif (9) provoque un déplacement angulaire de la plaquette (7, 7′) vers une position de dégagement dans laquelle sa partie d'entraînement (10, 10′) se dégage de l'organe d'entraînement ou de poussée associé (11, 11′) du coulisseau (3).

7. Un mécanisme d'aiguillage selon l'une ou plusieurs des revendications précédentes, caractérisé en ce que l'organe d'accouplement (4) qui peut coulisser avec le coulisseau (3) a une forme pratiquement prismatique et il est logé dans un

logement correspondant qui est défini par les extrémités arrière des tringles de manoeuvre internes.

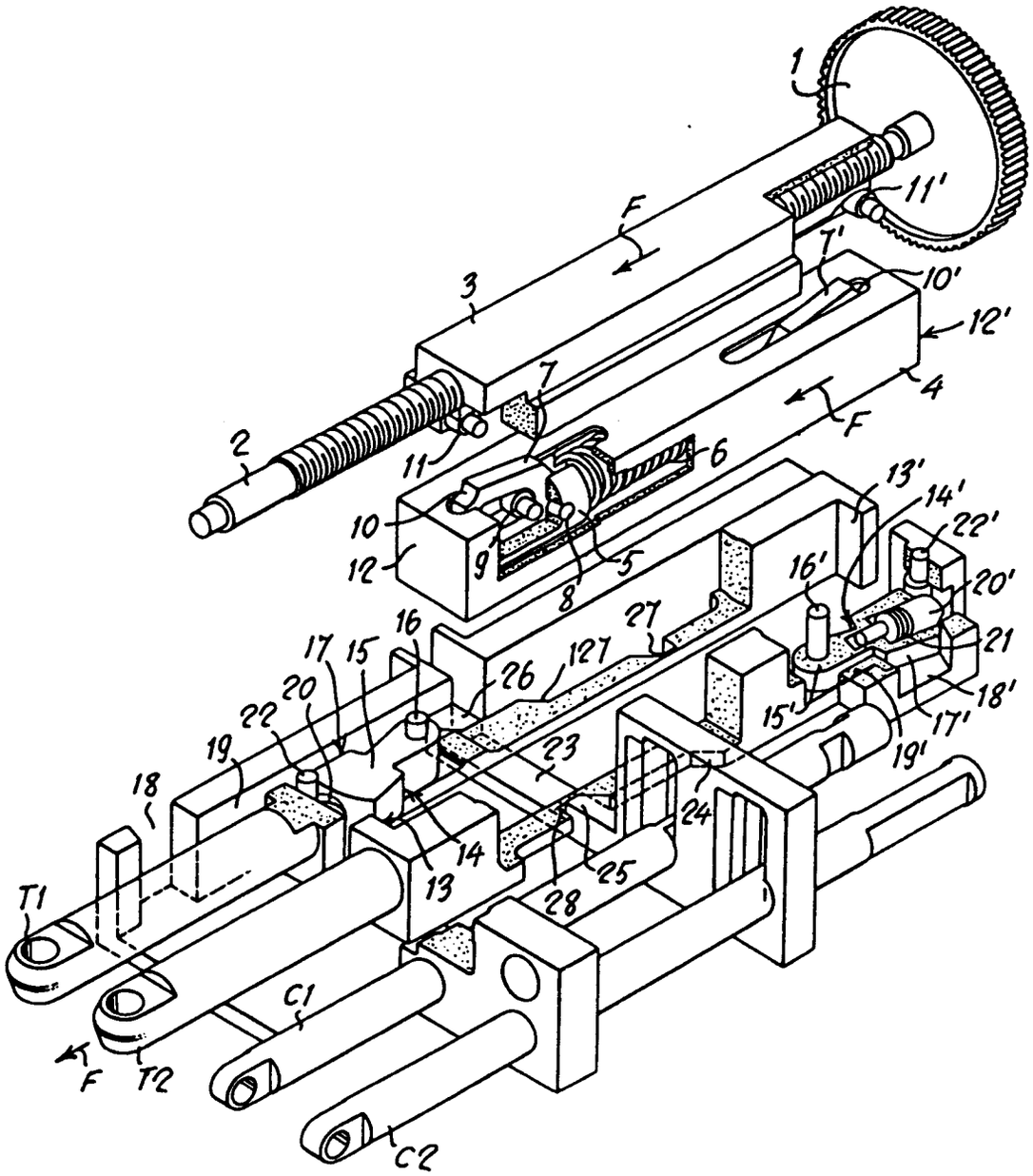
1
11'
F
7'
10'
3
12'
7
4
F
2
11
6
13'
14'
10
22'
12
9
5
8
16'
20'
27
21
16
17
15
26
127
18'
20
22
15'
17'
19
23
19'
18
24
14
13
25
28
T1
C1
F
T2
C2