(19) Europäisches Patentamt
European Patent Office
Office européen des brevets

(11) Publication number : **0 236 282 B2**

(12) **NEW EUROPEAN PATENT SPECIFICATION**

(45) Date of publication of the new patent specification : **01.09.93 Bulletin 93/35**

(51) Int. Cl.[5] : **D06F 23/02**

(21) Application number : **87830069.8**

(22) Date of filing : **27.02.87**

(54) **Improved washing machine with a reduced power consumption.**

(30) Priority : **28.02.86 IT 1959686**

(43) Date of publication of application : **09.09.87 Bulletin 87/37**

(45) Publication of the grant of the patent : **18.07.90 Bulletin 90/29**

(45) Mention of the opposition decision : **01.09.93 Bulletin 93/35**

(84) Designated Contracting States : **DE ES FR GB**

(56) References cited :
DE-A- 1 485 070
DE-A- 3 527 724

(56) References cited :
FR-A- 377 638
FR-A- 411 880
FR-A- 1 299 679
FR-A- 2 243 289
GB-A- 222 420
GB-A- 673 887

(73) Proprietor : **SMEG S.p.A.**
Via Circonvallazione Nord, 36
Guastalla (Reggio Emilia) (IT)

(72) Inventor : **Bertazzoni, Roberto**
Via Maldotti 2
Guastalla Reggio Emilia (IT)

(74) Representative : **Adorno, Silvano et al**
c/o SOCIETA' ITALIANA BREVETTI S.p.A. Via Carducci, 8
I-20123 Milano (IT)

EP 0 236 282 B2

Description

The present invention relates to an improved washing machine with a reduced power consumption, and in particular a machine capable of performing, in a traditional rotating drum, a washing cycle of a quality as good as the one obtained with the prior art machines, in spite of a limited water quantity being employed, and therefore with reduced consumption of detergent and electric power for heating.

It is known that since when the rotating drum with horizontal axis was adopted, only little changes have been experienced in the washing machine technology, other than some minor improvements to make these machines more practical, steady and/or noiseless. However the research in this field has been oriented lately to the reduction of utilization costs of the washing machines, while trying to decrease, whenever possible, the washing time and the consumption of electric power and water. The water feed reduction in the hot washing cycle has proved to be the most advantageous and efficient way to obtain this purpose. As a matter of fact a reduced quantity of water allows a quicker achievement of the washing temperature with a saving of time and electric power, as well as with a lower quantity of detergent at the same preferred concentration, thus leading to a consequent strong reduction of costs.

On the other hand it is known that the washing effect is obtained by the dynamic action mechanically exerted by the alternate rotation of the perforated drum in which the clothes are placed being immersed in the water and detergent solution contained in the washing tank and drum through the holes of the latter. This mechanical action is also favoured by a certain number of dragging ribs extending longitudinally on the inner cylindrical wall of the drum and radially projecting towards its rotation axis. The quantity of water with detergent contained in washing tank should therefore be such as to ensure a sufficient level height for soaking the laundry articles in the drum. If the height is insufficient, the washing effect would be unavoidably poor.

In attempting to overcome these difficulties, washing machines have been lately manufactured in which a sufficient soaking of the fabrics is ensured, in spite of the reduced water feed, by adopting a solution providing for a re-cycling of water contained in a boiler communicating with the washing tank by means of a recovery conduit, this water then falling again as a jet onto the fabrics within the drum through the holes thereof. This solution however requires that, in addition to the usual discharge pump, another circulating pump is applied to the container-boiler, which draws water from the boiler and delivers the same to the outlet section of the above-mentioned jet through a conduit. There is also a variation of this solution, according to which the water jet is directed, rather than to the outside of the drum, to the inside thereof, directly onto the items to be washed through an inlet nozzle from the door chamber.

In both the preceding solutions, against an undoubted saving of energy, it should however be taken into account the rise in costs resulting from the installation of a container-boiler and an additional circulating pump, bearing also in mind that both these elements add to the machine complexity and, especially for the pump, the likelihood of failures or malfunctions.

FR-A-1299679 discloses, in combination with a washing, rinsing or bleaching machine, having a feeding and degreasing auxiliary tank, a perforated drum rotatably mounted within a stationary housing connected with said auxiliary tank. Said drum is provided with rib-shaped "hoppers" or "troughs" having protruding elements or deflectors which are suitable to dip into the water between drum and housing and to feed it into said hollow ribs adapted to contain the washing liquid during a part of revolution of the drum and then to discharge it again into the inside of the drum, as said ribs are formed with perforations. However this prior patent states that only the wall downstream of the rib, in the direction of drum rotation, is provided with holes and the drawings show that such a wall is totally holed. Therefore this arrangement cannot ensure that the collected water is retained within the rib-shaped hopper for a considerable angle of rotation, but it would be discharged almost immediately, well before reaching a top position. Furthermore an auxiliary tank, in addition to the drum housing, is required.

Washing machines provided with hollow inner ribs in the rotating drum, with inlet openings to take in water from the tank and outlet holes to discharge the same onto the articles to be washed within the drum are also known from DE-A-3 527 724, DE-A-1 485 070, GB-A-673 887 and GB-A-222 420, according to all of which no auxiliary tank is required.

From these prior disclosures the features in the preamble of the claim are known, although DE-A-3 527 724 gives no indication about the position of the discharge holes. DE-A-1 485 070 discloses a longitudinal partition wall in symmetric paddles provided on a drum-like rotating housing in connection with a special machine having various washing stations, wherein the clothes are in counter-flow movement with respect to the washing fluid, from a feed inlet to a discharge outlet.

From GB-A-673 887 discharge holes are known on the upstream side, viewed in the direction of rotation, for the whole length of a rib on the washing drum. According to GB-A-222 420 water inlet openings along one generating line on a washing drum appear to be directed to opposite directions.

It is an object of the present invention to provide a washing machine the rotating drum of which has in-

ner hollow ribs including a transverse or radial partition wall, with a respective protruding mouth element in such a direction to drag water for a half length of the ribs when rotating in one direction and for the other half length in the opposite direction.

This object is achieved by means of the features of the characterizing portion of the claim.

According to the present invention the inner hollow of each of said ribs is formed with a division in two longitudinal chambers, each of which being provided with an opening at opposite sides of the rib with an inlet mouth inclined toward opposite directions, each time in the direction of rotation of the drum suitable to carry out a dynamic action on the related half rib, the outlet holes being also provided on opposite sides symmetrical to the central line of the rib to cause some water to be stored therein before being discharged through said holes according to the corresponding rotation direction of the drum.

These and other objects, advantages and features of the washing machine of the invention will be clear to those skilled in the art by the following detailed description of a preferred embodiment thereof, given by way of non-limiting example with reference to the enclosed drawing in which:

FIGURE 1 shows a schematic view of the washing machine according to the invention, illustrated in cross-section along a vertical diametral plane of the washing tank; and

FIGURES 2, 2a show a sectional view along line II-II of Fig. 1 and, respectively, a detail of the bottom portion of the washing machine, cross-sectioned along line IIa-IIa of Fig. 1.

With reference to the drawings a motor-flywheel unit 1 is conventionally mounted on the frame 2 of the washing machine according to the invention in order to rotate, as it is known about a horizontal axis X-X, a cylindrical perforated drum 20 at the inside of a chamber or tank 10 wich encloses the same. Again in a traditional way the inside portion of drum 20 is accessible from outside through a door 12.

Similarly as for other known washing machines, the diameter of tank 10 is kept as small as possible, while reducing at the same time the size of gap 15 between drum 20 and inner wall of the washing tank 10. Such a gap can be brought to a minimum size of about 12 mm at the front side of the drum, as required by the unavoidable clearance between the two walls, when considering that the rotating drum is subject to vibratory and oscillating movements of its axis X-X, also depending upon the load of the articles to be washed and their more or less uniform distribution. The size of the gap can even be decreasing towards the rear side of the machine, where the drum is less subject to transverse movements, such as by making the washing tank slightly tapered, with a greater diameter at the front side. Due to the reduced room between tank and drum, the heating resistance 16 is housed as it is known in a recess 14 formed for this purpose at the lower portion of the wall of the tank itself, i.e. in the zone which during the operation is certainly covered with water, as is better seen in Fig. 2.

By these known arrangements an average volume of 12 liters of water with detergent can be reduced to about 8 liters for washing machines having a load capacity of 5 kg.

In this way the washing efficiency is increased, since the water quantity within the drum 20 is relatively greater, whereas the fraction of fluid mass is reduced, which remains substantially inactive, as it fills the gap 15. To ensure that all the fabrics in the drum 20 will be soaked, the periphery of the drum 20 has on his outer surface means for taking and temporary storing a given quantity of water which is drawn from the lower zone of gap 15 upon rotation of the drum, to be subsequently poured downwards onto the fabrics in the drum while the rotation continues.

With reference to the drawing, each of such means can be advantageously provided by the dragging spokes or ribs usually included in the known washing machines to enhance the mechanical action onto the fabrics to be washed by driving them into rotation with the drum. These ribs are formed hollow for obvious reasons of weight reduction and saving of material, and according to the invention are modified as follows. Designated 22, 22', 22" in Fig. 2, these ribs having a cylindrical cross-section with the apex radially directed towards the axis X-X of the drum and evenly distributed along the drum periphery (in the case shown at an angular distance of 120° from each other, as they are in number of three), all show an opening 23 which communicates their inside with the gap 15. The opening 23, defined by a slightly inclined member 21, is directed facing the rotation direction of drum 20, whereby during the washing operation the inside of each rib 22 is filled with the liquid in the lower portion of the gap by dynamic effect, when opening 23 comes into contact therewith and, as the drum rotation continues (in a counterclockwise direction in Fig. 2), the liquid flows out therefrom through holes 25 provided at the apex portion of each rib. According to the invention the holes 25 are formed beyond the apex portion, in the indicated direction of rotation, in order to ensure that the water received within each rib will be discharged when the latter has reached a given angle with respect to the horizontal, i.e. at a predetermined height from the articles in the drum, this height in fact depending on the position of said holes 25. A better distribution is thus obtained of then water which sprinkles on the fabrics to be washed in a rain-like fashion.

However, as the drum rotation is alternately directed in both directions, if the ribs were made as shown in Fig. 2 along the whole length, they would have no influence on water in the gap 15 during the clockwise rotation of the drum 20. To this effect it has

been thought to use one half length of each rib 22 for the counterclockwise rotation and the other half length for the clockwise direction by dividing each rib into two halfribs (or half-spokes), i.e. a front one 22 and a rear one 22a, by means of a separating central wall 24. Both half-ribs are aligned each other along the same generating line of the cylinder forming the drum and have therefore the associated opening 23 with the member 21 defining the same directed to opposite sides from the central axis of the rib, and the holes 25 also positioned at opposite sides, symmetrically with respect to those of the other half-rib. This is clearly shown in Fig. 2a with reference to the lower rib 22, 22a, when compared with Fig. 2.

From the foregoing it will be clear the advantages and the way of operating of the washing machine according to the invention which, without adding difficulties due to additional devices which are expensive and such as to cause the drawbacks of possible failures or necessity of maintenance service, provides for an important reduction of the quantity of water required while a washing performance is obtained as good as with the known washing machines of the prior art which need a larger quantity of water. Thus the mass of water contained in the bottom of gap 15 between washing tank and drum, which heretofore was useless for washing purposes, not only is reduced in percentage with respect to that portion of water which is contained within the drum passing through the holes thereof, but is also utilized to better soak the fabrics to be washed.

Claims

1. Washing machine comprising a perforated drum (20) which rotates alternately in opposite directions at the inside of a washing tank (10) coaxially therewith about a horizontal axis (X-X), said drum being provid ed with inner, substantially radial dragging ribs (22, 22', 22") which extend longitudinally and parallel to said axis (X-X), also comprising means (21) projecting from the outer surface of drum (20) and suitable to dip into the lower portion of a gap zone (15) between tank (10) and drum (20) and to draw therefrom, during the rotation of the drum in one direction, a given quantity of water, means (22) for containing the same during a fraction of revolution of the drum and then discharging it down again into the inside of the drum (20), wherein said means (22) for containing and subsequent discharging the washing liquid are formed of the dragging ribs themselves (22, 22', 22") which are made hollow with an opening (23) at the drum (20) periphery, with discharge holes (25) being provided only in the zone of the rib apex directed inwardly into the drum and of the rib wall which is upstream in the said one direction of rotation of the drum, and wherein the width of the gap (15) between said tank and washing drum lying in the range of 12-15 mm at the front portion of said drum, characterized by the fact that the inner hollow of said ribs is divided in two longitudinal portions, each of which (22, 22a; 22', 22'a; 22", 22"a) having associated an opening (23) at opposite sides of the rib with a mouth element (21) inclined toward opposite directions, each time in the direction of rotation of the drum suitable to carry out a dynamic action on the related half rib, the outlet holes (25) being also provided on opposite sides symmetrical to the central line of the rib to provide for some water storing therein before its flowing out through said holes (25) according to the corresponding rotation direction of the drum (20).

Patentansprüche

1. Waschmaschine mit einer durchlöcherten Trommel (20), die koaxial im Inneren eines Waschbehälters (10) abwechselnd in entgegengesetzten Richtungen um eine horizontale Achse (X-X) rotiert, wobei die Trommel mit innenliegenden, im wesentlichen radialen Mitschlepprippen (22, 22', 22") versehen ist, die sich der Länge nach und parallel zu der Achse (X-X) erstrecken, weiterhin mit Mitteln (21), die von der Außenfläche der Trommel (20) hervorragen und geeignet sind, in den unteren Bereich einer Spaltzone (15) zwischen Behälter (10) und Trommel (20) einzutauchen und von dort während der Rotation der Trommel (20) in eine Richtung eine bestimmte Wassermenge mitzunehmen, Mitteln (22) zum Halten derselben während eines Bruchteils einer Drehung der Trommel und zu deren nachfolgendem Wiederabgeben nach unten in das Innere der Trommel (20), wobei die Mittel (22) zum Halten und nachfolgenden Wiederabgeben der Waschflüssigkeit aus den Mitschlepprippen (22, 22', 22") selbst ausgebildet sind, die hohl ausgeführt sind mit einer Öffnung (23) am Umfang der Trommel (20), mit Abgabeöffnungen (25), die nur in dem Bereich des Rippenscheitels, der nach innen in die Trommel (20) gerichtet ist, und der Rippenwand, die sich stromauf in der einen Drehrichtung der Trommel (20) befindet, vorgesehen sind, und wobei die Breite des Spaltes (15) zwischen dem Behälter und der Waschtrommel am vorderen Teil der Trommel im Bereich von 12 bis 15 mm liegt, dadurch gekennzeichnet, daß der Innenhohlraum der Rippen in zwei Längsabschnitte geteilt ist, denen jeweils (22, 22a; 22', 22'a; 22", 22"a) eine Öffnung (23) an sich gegenüberliegenden Seiten der Rippe zugeordnet ist, mit einem jeweils in entgegengesetzte Richtungen ge-

neigten Mündungselement (21), geeignet, um jedesmal in der Drehrichtung der Trommel eine dynamische Wirkung auf die zugeordnete Rippenhälfte auszuüben, wobei die Abgabeöffnungen (25) ebenfalls an sich gegenüberliegenden Seiten symmetrisch zu der Mittellinie der Rippe angeordnet sind, um für etwas Wasserspeicherung darin vor dessen Ausfluß durch die Öffnungen (25) gemäß der entsprechenden Drehrichtung der Trommel (20) zu sorgen.

Revendications

1. Machine à laver comprenant un tambour perforé (20) qui tourne alternativement dans des sens opposés, à l'intérieur d'une cuve de lavage (10), ensemble autour d'un même axe horizontal (X-X), ledit tambour étant doté de côtes internes de brassage sensiblement radiales (22, 22', 22") qui s'étendent longitudinalement et parallèlement audit axe (X-X), comprenant également des moyens (21) faisant saillie depuis la surface extérieure du tambour (20) et en mesure de plonger dans la partie inférieure d'une zone d'intervalle (15) entre la cuve (10) et le tambour (20), et d'en retirer, pendant la rotation du tambour dans un sens, une quantité d'eau donnée, des moyens (22) pour contenir cette eau pendant une partie de la révolution du tambour puis pour la déverser de nouveau vers le bas, à l'intérieur du tambour (20), dans laquelle lesdits moyens (22) pour contenir puis déverser le liquide de lavage sont formés par les côtes de brassage (22, 22', 22") elles-mêmes, qui sont creuses avec une ouverture (23) à la périphérie du tambour (20), avec des orifices de déversement (25) uniquement dans la partie de la pointe de la côte orientée vers l'intérieur du tambour et dans la partie de la paroi de la côte qui est en amont dans ledit sens de rotation du tambour, et dans laquelle la largeur de l'intervalle (15) entre ladite cuve et ledit tambour de lavage est dans la plage de 12 à 15 mm, sur la partie avant dudit tambour, caractérisée en ce que le creux interne desdites côtes est divisé en deux portions longitudinales, dont chacune (22, 22a; 22', 22'a; 22", 22"a) a une ouverture (23) qui lui est associée sur les faces opposées de la côte, avec une bouche (21) inclinée dans des sens opposés, à chaque fois dans le sens de rotation du tambour qui est adapté pour effectuer une action dynamique sur la demie côte qui s'y apporte, les orifices de sortie (25) étant également placés sur les faces opposées, symétriquement par rapport à la ligne centrale de la côte, afin d'y permettre le stockage d'une certaine quantité d'eau, avant que cette eau ne soit déversée, par l'intermédiaire desdits orifices (25), en fonction du sens de rotation correspondant du tambour (20).

Fig.1

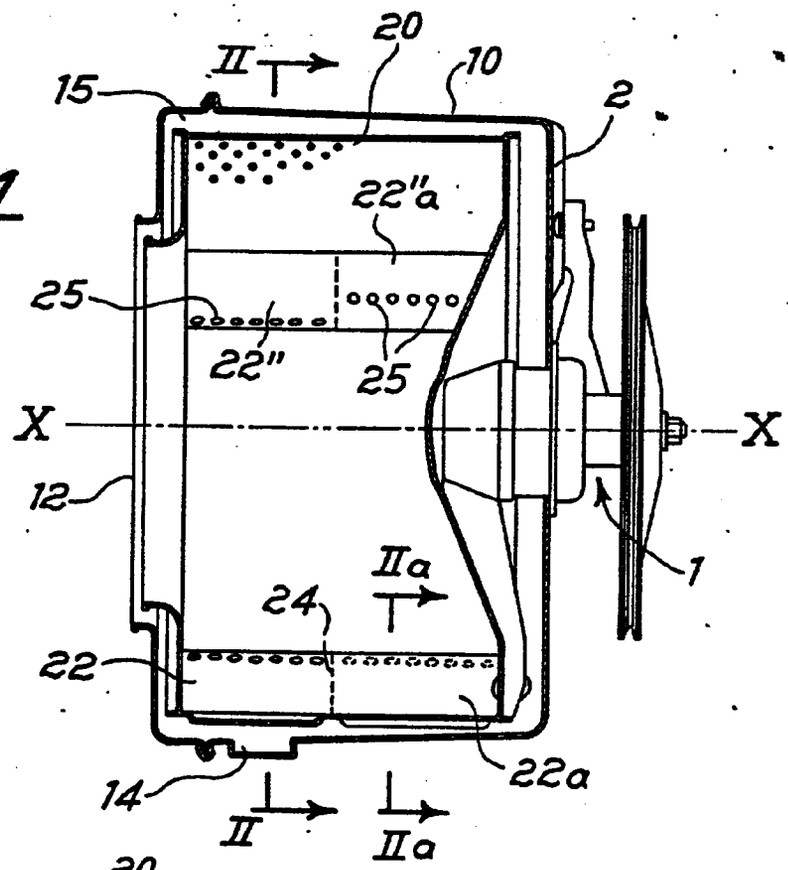

Fig.2

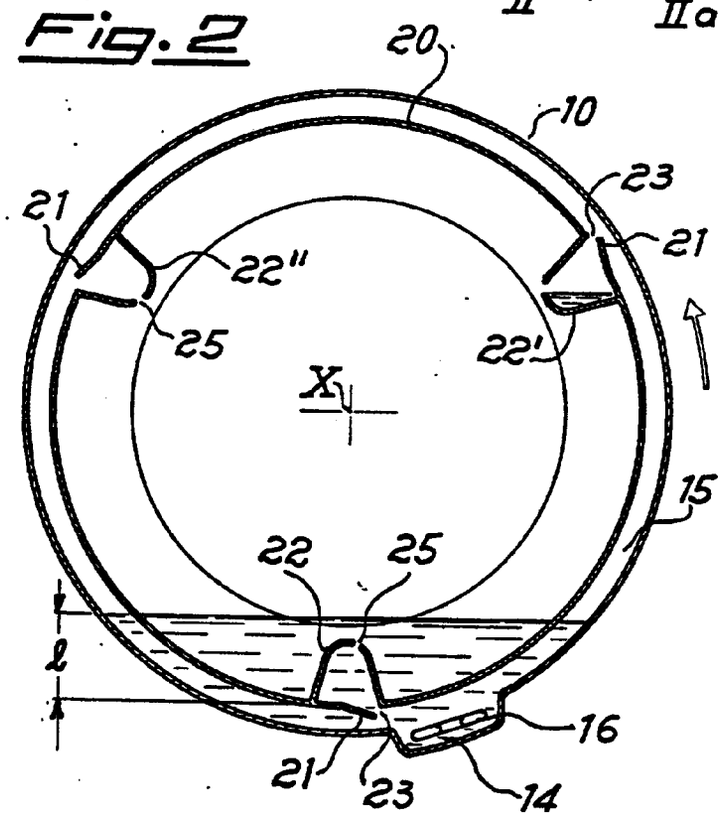
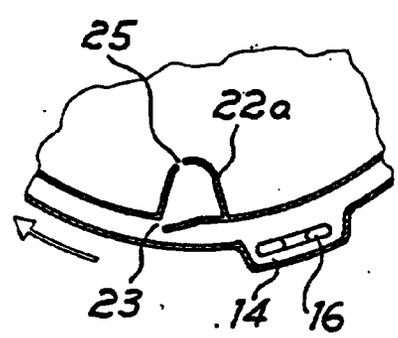
Fig.2a