(19) Europäisches Patentamt
European Patent Office
Office européen des brevets

(11) Publication number: **0 512 940 B1**

(12) # EUROPEAN PATENT SPECIFICATION

(45) Date of publication of patent specification: **05.07.95** (51) Int. Cl.[6]: **D06F 58/28**

(21) Application number: **92610032.2**

(22) Date of filing: **06.05.92**

(54) **Laundry dryer.**

(30) Priority: **07.05.91 DK 838/91**

(43) Date of publication of application:
11.11.92 Bulletin 92/46

(45) Publication of the grant of the patent:
05.07.95 Bulletin 95/27

(84) Designated Contracting States:
AT BE CH DE ES FR GB IT LI NL PT SE

(56) References cited:
EP-A- 0 312 072
EP-A- 0 351 276
DE-A- 3 438 762
US-A- 2 895 230

(73) Proprietor: **NYBORG VASKERIMASKINER A/S**
Österbro 4
DK-5690 Tommerup (DK)

(72) Inventor: **Poulsen, Olaf Bronden**
Skovgardsvej 38
DK-5230 Odense M (DK)

(74) Representative: **Pedersen, Soeren Skovgaard**
c/o K. Skoett-Jensen Patentingenioerer A/S,
Lemmingvej 225
DK-8361 Hasselager (DK)

Note: Within nine months from the publication of the mention of the grant of the European patent, any person may give notice to the European Patent Office of opposition to the European patent granted. Notice of opposition shall be filed in a written reasoned statement. It shall not be deemed to have been filed until the opposition fee has been paid (Art. 99(1) European patent convention).

EP 0 512 940 B1

Description

The invention concerns a laundry drying machine, in particular the monitoring of a lint filter in a tumbler dryer.

The background of the invention is a tumbler dryer with a rotatable drum which is permeable to air and which contains wet laundry to be dried, an air inlet and an air passage from the inlet through the drum to a ventilator which is adapted for exhausting air through the air passage. The air is heated in a heater which is placed before the drum in the air passage, which heater supplies essentially constant power. The air temperature is regulated as a result of signals from a temperature sensor which is placed in the air passage at or immediately before the entry of the air into the drum. A regulator is connected to the temperature sensor which will disconnect the heater from the power supply when the temperature rises above a pre-determined upper limit, and re-connect the heater when the temperature goes below a predetermined lower limit.

In order to prevent that the ventilator or the air duct following the ventilator get clogged with lint from the laundry there is provided a lint filter in the air passage for collecting the lint. In order to advertise the fact that the filter needs cleaning the laundry drying machine is fitted with a monitoring device for the degree of clogging of the filter, and this monitoring device will trigger an alarm when the degree of clogging exceeds a given pre-determined limit.

Laundry drying machines of this kind have been on the market for a number of years. The monitoring device is often made as an electromechanical system which re-acts acts to the reduction in pressure in the air passage when the lint filter clogs up. These solutions have many problems and uncertainties, however. They are frequently quite clumsy and space-demanding in the installation. Quite large demands on their sensitivity are made because the vacuum is only slight and its variations are small, and this often provokes erroneous signals or cycling of the monitoring signal which may prove irritating to the user of the laundry drying machine.

Document EP-A-0 312 072 describes a safety device for a laundry drying machine cutting the electric power supply in case of insufficient drying air circulation due to clogging of the lint filter when the resetting of protection thermostat takes place at progressively increasing time intervals.

It is an object of the invention to provide a laundry drying machine in which the degree of clogging of the lint filter is monitored fully electronically and in which the disadvantages of known solutions are eliminated.

The object is met in a laundry drying machine in which the monitoring device comprises a counting device which is adapted to trigger the indicating signal in case the upper limit of temperature is exceeded a pre-determined number of times.

The inventions rests on the realization that the frequency of interruption of the supply to the heater that has to occur in order to keep the temperature below the upper limit is a practically applicable measure of the degree of clogging by lint.

This may be understood by a theoretical consideration of a tumbler dryer in which the power of the heater is adapted to the the ventilation through the tumbler dryer in case of normal degree of filling and drying at the highest temperature permissible. Without a lint filter a dynamic thermic equilibrium would establish itself after a short period of stabilization. Because of the adaptation the the equilibrium would be characterized by un-interrupted supply of power to the heater. Because of the drying of the wet laundry and consequent expansion of volume a slow rise of temperature would be noticeable immediately before the entry of the air into the drum, caused by the restriction of the air passage. Towards the end of the drying cycle, in order not to exceed the maximum temperature, it might be required to perform some regulation by disconnecting/reconnecting the power supply.

If the same considerations are made with respect to a tumbler dryer with a lint filter, it will be seen that the gradual clogging of the filter will provoke a further reduction of the air transport through the air passage. This means that it will be necessary to perform more cycles of temperature regulation than if the lint filter were clean or non-existent. Hence it will be possible to count the frequency of temperature regulation and compare it with the value obtained by experience in the case of a completely clean lint filter. In case the frequency is too great, a warning signal as to the need for cleaning must be given to the user.

These theoretical considerations are not influenced by the fact that a tumbler dryer may not be optimally adjusted from a thermic viewpoint. Above all it must be considered that there is no absolute criterion for the precise timing of a cleaning of the lint filter; the signal can only act as a timely reminder for the user. In case the heater is somewhat over-dimensioned there will already be a fairly high frequency of regulation, however there will still be a rise in frequency when the lint filter clogs. And this rise will be measurable.

Similar considerations apply in case of a drying operation in which the power of the heater is reduced in order to obtain a lower temperature due to special requirements of the laundry. This only means that the heater is over-dimensioned in this situation. One embodiment of the invention in

which several drying temperatures may be specified in one and the same tumbler dryer is covered by claim 2.

In case the heater is under-dimensioned (the other parameters being unchanged) the lint filter will have to be more clogged before the signal is given. This is of no consequence, however.

Normally the exhaust air is expelled into a duct. In case this clogs up it would also create a reduction of air transport through the tumbler dryer, and the signal would be given, although the lint filter is not yet clogged. In this case the instruction book should point the user or repairman to the likely cause of indication.

As such, the principle of regulating the temperature of a tumbler dryer is not unknown, and conventional bi-metallic switches or controllers of the bellows type have been used. These have a fairly high time constant and may have to be provided in a number corresponding to the number of drying temperatures desired, in case each controller has a fixed temperature at which it reacts. The introduction of a lint filter monitoring device according to the invention introduces a signal processing task (the measurement of the frequency of temperature regulation and comparison with the value based on experience) which justifies the use of only one temperature sensor and measuring circuit, as defined in claim 3. Both tasks may be sensibly performed by a micro-processor.

The invention will be further described in the following with reference to the drawings in which

Fig. 1 is a schematic vertical section through a tumbler dryer.

Fig. 2 shows the temperature over time for input and exhaust air during a typical drying cycle.

Fig. 3. shows the temperature over time for input and exhaust air during a drying cycle with partially clogged lint filter.

Fig. 4 is a schematic diagram showing the connection of a temperature sensor to a controller for a laundry drying machine according to the invention.

Fig. 5 is a simplified decision tree for a programme routine according to the invention for the monitoring of a lint filter.

The tumbler dryer as shown in Fig. 1 is adapted for the drying of wet laundry. The laundry (not shown) is put into a rotatable drum 1 which is closed by a door 2 encasing a window portion 3. The dryer is started by means of a control panel on the front of the machine (not shown). There is a choice between a drying programme for robust textile (cotton and the like) which allows drying at a fairly high temperature, and a programme for more sensitive textile, such as synthetics, which will allow only lower temperatures. Furthermore there is a provision for an airing programme where no drying takes place, only loosening by the passage of air. The possibilities for individual programmes would to a large degree be determined by market requirements.

When the user has started the tumbler dryer by means of the control panel the drum 1 rotates, and a ventilator 4 in the tumbler dryer is started. The ventilator 4 sucks air through the laundry in the drum. The air is let in through an air inlet 5 at the lower end of a heating unit 6 at the rear of the tumbler dryer. In the embodiment shown heating occurs by gas, and the air passes a gas burner 7. The heated air passes various guide plates 8, 9 and is let into the drum 1 through its perforated rear wall via an opening 10. Instead of a gas burner an electric heating element may be used or a heat exchanger which is supplied with steam under pressure.

In the front of the drum the air exits through a perforated shield which surrounds the door 2 and is led via a ring-shaped manifold 12 to an exhaust channel 13 which houses the ventilator 4. In front of the ventilator 4 a lint filter 14 is placed in the channel 13. The lint filter consists of a mesh (of metal or plastics) supported by ribs. The curved shape shown is chosen to increase the surface area of the filter. The lint filter is meant to remove lint or fluff from the exhaust air which has been picked up from the laundry during drying. The ventilator expels the air into an exhaust duct 15 at the rear of the tumbler dryer.

During the drying the input temperature is monitored in the opening 10 by means of a temperature sensor 16, and the exhaust temperature is monitored by means of a temperature sensor 17 in the exhaust duct 15. Both sensors are connected to an electronic controller in the tumbler dryer.

Fig. 2 illustrates the temperature over time for the input air (curve 23) and exhaust air (curve 24) for a typical drying cycle as well as that of the surrounding air (curve 25) and the residual humidity over time in the laundry (curve 26). The data shown were measured during a drying cycle where the tumbler dryer was already warmed-up, i.e. it had performed a previous drying cycle. Furthermore the lint filter was clean. The heater is dimensioned to work continuously and with constant power. The input temperature reaches ca. 130 deg.C within 2 minutes of the start of the drying cycle, where it remains stable, with a slight increase over time. The warm air perfuses the laundry in the drum and carries water vapour with it so that the residual humidity is continuously dropping. As the cooling of the air due to evaporation of water from the laundry is reduced the temperature of the exhaust air increases. The drying cycle is interrupted when the temperature of the exhaust air has reached a limit which has been determined experi-

mentally; experience shows that the laundry will have reached a suitable residual humidity. In the example shown the drying cycle is interrupted when the exhaust air temperature rises above 60 deg.C.

Fig. 3 in greater magnification shows the temperature over time for input air (curve 27) and exhaust air (curve 28) for a drying cycle with essentially the same conditions as above but where 75% of the lint filter had been screened off, i.e only 25% of the effective filter area of the lint filter was available for the passage of air. This was a simulation of operating conditions where the lint filter is partially clogged after a number of drying cycles.

The clogging of the lint filter leads to a reduced air transport through the tumbler dryer. The heater, working with constant power, heats the reduced air volume to a higher temperature than would be the case at full air transport. In order not to overheat the laundry the power supply is cut off when the input air reaches a temperature of 145 deg.C and is re-connected when the input air temperature has fallen to 135 deg.C. This ensures an average temperature of about 130 deg.C which by experience is the optimal temperature for cotton and other robust textiles.

It will be noted that the clogging of the filter causes the need for frequent adjustment of the heater in order to compensate for the reduced air transport.

In the tumbler dryer according to the invention a signal is given to the user that the lint filter needs cleaning when it has been determined that the frequency of these adjustments exceeds a previously set upper limit. In other words the control unit counts the number of times the heater is disconnected and reconnected within a suitable time interval, and if this occurs too often, a signal to clean the lint filter is given.

In case the user has selected drying at a lower temperature (for sensitive textiles) there will be some adjustment activity, even with a cleaned lint filter, in order to keep the temperature at the lower temperature. In practice the frequency of adjustment stabilizes itself at a suitable, "normal", value in case of a clean lint filter. In accordance with a more and more clogged lint filter the adjustment must take place with a frequency that exceeds the "normal" frequency in order to keep the temperature at the level required. In this case, too, the filter may be monitored by counting the frequency of disconnecting and reconnecting the heater.

It has been seen that the monitoring of the lint filter is based on a measurement of the input air temperature in the laundry drying machine. This measurement is the basis for the control of the heater supply and for the counting of the number of adjustments.

The measurement is performed by means of the temperature sensor 16 which is placed in the opening 10 that connects the heater 6 and the drum 1. In a preferred embodiment the temperature sensor is a temperature sensitive resistor, the resistance of which decreases with increased temperature. By means of analogue circuitry shown in Fig. 4 this NTC-resistor is connected to an input port of a micro-processor which performs the control processes in the tumbler dryer. The micro-processor is of a type which incorporates an analogue-to-digital converter for digitizing the signal from the analogue circuitry, but it is not shown in detail, because such control circuits are well-known and readily available. Also it must be expected that the architecture of such micro-processors will change, although they are pincompatible with presently known components.

As is seen in Fig. 4 the analogue circuitry is conventional in that the temperature sensor 16 is part of a voltage divider 16, R1, the potential difference of which is subtracted from a reference voltage from another voltage divider R2,R3 via the inputs of an operational amplifier 20. This embodiment is in essence a bridge circuit. In order to suppress noise and to ensure EMC the temperature sensor is decoupled by means of capacitors C, C1 i parallel and chokes L in series with the connecting cable, and limiting diodes D. The output signal from the operational amplifier is fed to the analogue-to-digital port 29 of the micro-processor amplifier via an active limiting circuit using the operational amplifiers 21 and 22 and the limiting diodes D1. The limiting circuit protects the micro-processor from voltage surges. The digitalized output voltage from the circuit in Fig. 4 is a measure of the input air temperature. The temperature sensor 17 for the exhaust air temperature may be connected to the micro-processor via a similar circuit.

The micro-processor has several other input ports apart from the temperature sensor circuits. These are provided for signals from the control panel and other sensors in the laundry drying machine. Furthermore there are output ports for control of indicator lamps in the control panel, among which is one for indicating the need for cleaning of the lint filter, and ports for control of the heater, the ventilator, a drive motor (which is not shown) for rotating the drum 1, etc. These particulars need not be described.

A programme in the micro-processor controls the functions of the drying tumbler. Fig. 5 shows a flow diagram (a decision tree) for a programme routine which performs the most important parts of the lint filter monitoring according to the invention. The routine is a sub-routine in a larger programme which is performed on a cyclic basis as long as the

tumbler dryer is in operation. In the present embodiment the programme is not interruptcontrolled. The routine manipulates the different counters internal to the micro-processor and maintains certain flags as indicators of the condition of the tumbler dryer.

General steps. After the routine has been called in step 30 it is determined in steps 31 and 32 if the tumbler dryer has been started, and if the programme selected comprises heating (a drying, not airing process). If no heating has been specified the routine is left immediately. If the tumbler dryer has been started in a drying programme, it is determined in step 33 if an earlier drying cycle has given an indication of clogged filter. If that is the case, the routine is left immediately.

A central function in the routine is to determine if the heater is connected (step 34). The continuous temperature measurement and the disconnection and re-connection of the heater are controlled by other sub-routines in the programme; the operating condition of the heater creates a representation of whether the temperature has exceeded the predetermined limits.

Start of the tumbler dryer Immediately following the start of the tumbler dryer the heater will not yet be in operation. The same applies during the later operation of the tumbler dryer after exceeding the upper control limit. With a view to this later operation a counter is provided in step 35 which may be reset to the number of heater adjustments, termed the heater counter, which will count down.

Next, in step 36, it is determined if the heater counter and another counter provided to keep track of elapsed time have been reset. This would not have been the case at the start of the tumbler dryer. In step 37 it is therefore indicated that reset has taken place (simultaneously with the reset itself), and in step 38 the elapsed time counter is reset for a time of 4 minutes.

In case the user has selected drying at a low temperature (step 39) the heater counter is reset in step 41 to a value of 9 adjustment occurrences. In case drying at high temperature has been selected, the heater counter is reset to 1 adjustment occurrence in step 40. This implies that at the lower temperature a lint filter indication is given in case the temperature has to be adjusted more than 9 times within a 4 minute period. At the higher temperature a lint filter indication is given in case the temperature has to be adjusted more than once in 4 minutes. These are values based on experience with a specific laundry drying machine. Similar values may be determined for other types of machine by practical experiments which may be simply performed as a routine matter by the man skilled in the art.

Irrespective of the reset values of the counters steps 42 and 43 determine whether they have been counted to zero. This would not have been the case at the start of the tumbler dryer. Hence the routine is left at step 49.

Before first adjustment At the next cycle of the routine after the start of the tumbler dryer the heater will be operational (this description presupposes that it has been turned on during the first cycle of the programme), which means a jump from step 34 to step 46 in which it is determined if the heater counter is blocked from counting. This would not be the case because it was reset at step 35, at the start of the laundry drying machine. The content of the heater counter is decreased by one and is subsequently blocked against further decrease. This block occurs because of the loop character of the control programme and will not be waived before the heater is once more disconnected (steps 34 and 35). Before this happens, each subsequent cycle of the routine will pass steps 34, 46, and 49, without any change in the state of the tumbler dryer.

After first adjustment After the heater has been disconnected for the first time and by each subsequent disconnection of the heater the routine steps from step 36 to step 42. In these steps it is determined if the measurement period has elapsed. If the period has not yet elapsed it is determined in step 43 if the heater counter has been decreased to zero. This corresponds to determining if within the measurement period the pre-selected number of adjustment occurrences has been reached, in other words if a lint filter alarm is to be given. In case the heater counter has been emptied (counted down to zero) within the measurement period, alarm is given in step 44 and the routine is left at step 49. Each subsequent cycle of the routine will lead from step 33 to step 49 without any change in the state of the tumbler dryer.

If the heater counter has not been emptied during the measurement period, a new measurement must be initiated. This occurs in step 45 by flagging that the counters are no longer reset, and the routine is left in step 49. The next cycle will perform a jump from step 36 to reset in steps 37-41.

It follows from the present discussion of the filter monitoring routine that the elapsed time counter, being a real-time counter, is reset by another part of the programme. The same applies for those indicators which are queried by the routine in steps 31-34 in order to determine the present operational condition of the tumbler dryer.

In practical construction work the mechanical, electronic, and signal processing details will be adjusted for the targetted market segment. The embodiment discussed above is only to be consid-

ered as an illustration and not as a limitation of the principles of the invention such as these are defined in the description and in the patent claims.

Claims

1. A laundry drying machine comprising a rotatable drum (1) which is permeable to air for holding wet laundry, with an air inlet (5) and an air passage from the air inlet through the drum to a ventilator (4) for evacuating air through the air passage, a heater (6) being disposed in the air passage in front of the drum (1), which heater supplies essentially constant power, a temperature sensor (16) in the air passage for monitoring the temperature of the air prior to entry into the drum, a control device being connected to the temperature sensor for disconnecting the heater (6) when the temperature exceeds a predetermined upper limit, and for re-connecting the heater (6) when the temperature falls below a pre-determined lower limit, with a lint filter (14) disposed in the air passage (13) between the drum and the ventilator for retaining lint from laundry in the drum, and with a monitoring device for evaluating the clogging of the filter, said device being adapted for giving an alarm when the clogging has exceeded a pre-determined limit, **characterized** in that the monitoring device consists of a counting device which triggers the alarm when the temperature in a pre-determined time interval exceeds the upper limit a pre-determined number of times.

2. A laundry drying machine according to claim 1 in which the control panel has at least two settings which are distinguished by the upper limit for the temperature, **characterized** in that the counting device has corresponding settings in which a lower upper limit for the temperature must be exceeded more frequently than a higher upper limit for the temperature in order to trigger the alarm.

3. A laundry drying machine according to claim 1 in which the control panel has at least two settings which are distinguished by the upper limit for the temperature, **characterized** in that the control device for all settings is connected to the same temperature sensor (16), that the control device is furnished with a measuring device for measuring the temperature, a comparator connected to the measuring device for comparing the measured temperature to one of at least two adjustable upper limits, and an adjustment device connected to the comparator for connecting and disconnecting the heater (6), the counting device having corresponding settings, in which a lower upper limit for the temperature must be exceeded more frequently than a higher upper limit for the temperature in order to trigger the alarm.

Patentansprüche

1. Ein Wäschetrockner, umfassend eine drehbare, luftdurchlässige Trommel (1) zur Aufnahme nasser Wäsche mit einem Lufteinlaß (5) und einem Luftdurchgang von dem Lufteinlaß durch die Trommel zu einem Ventilator (4) zum Evakuieren von Luft durch den Luftdurchgang, wobei eine Heizeinrichtung (6) in dem Luftdurchgang vor der Trommel (1) angeordnet ist und im wesentlichen konstante Energie zuführt, sich ein Temperaturfühler (16) in dem Luftdurchgang zum Erfassen/Kontrollieren der Temperatur der Luft vor Eintritt in die Trommel befindet, eine Steuereinrichtung mit dem Temperaturfühler verbunden ist, um die Heizeinrichtung (6) abzuschalten, wenn die Temperatur einen vorbestimmten oberen Grenzwert überschreitet, und um die Heizeinrichtung wieder zuzuschalten, wenn die Temperatur unter einen vorbestimmten unteren Grenzwert fällt, mit einem Faser- oder Flusenfilter (14), das in dem Luftdurchgang (13) zwischen der Trommel und dem Ventilator angeordnet ist, um Fasern/Flusen von der Wäsche in der Trommel fernzuhalten, und mit einer Erfassungs-/Kontrolleinrichtung zur Bestimmung der Verstopfung des Filters, wobei die Einrichtung einen Alarm geben kann, wenn die Verstopfung einen vorbestimmten Grenzwert überschreitet, **dadurch gekennzeichnet,** daß die Erfassungs-/Kontrolleinrichtung aus einer Zähleinrichtung besteht, die den Alarm auslöst, wenn die Termperatur in einem vorbestimmten Zeitintervall den oberen Grenzwert eine vorbestimmte Anzahl von Malen überschreitet.

2. Ein Wäschetrockner nach Anspruch 1, bei dem das Bedienungsfeld mindestens zwei Stellungen aufweist, die sich durch den oberen Grenzwert für die Temperatur unterscheiden, **dadurch gekennzeichnet,** daß die Zähleinrichtung korrespondierende Stellungen aufweist, bei denen ein niedrigerer oberer Grenzwert für die Temperatur häufiger überschritten werden muß als ein höherer oberer Grenzwert für die Temperatur, um den Alarm auszulösen.

3. Ein Wäschetrockner nach Anspruch 1, bei dem das Bedienungsfeld mindestens zwei Stellungen aufweist, die sich durch den oberen Grenzwert für die Temperatur unterscheiden,

dadurch gekennzeichnet, daß die Steuereinrichtung für alle Einstellungen mit demselben Temperaturfühler (16) verbunden ist, daß die Kontrolleinrichtung mit einer Meßeinrichtung zur Messung der Temperatur ausgerüstet ist, mit einem Komparator der mit der Meßeinrichtung zum Vergleich der gemessenen Temperatur mit einem von mindestens zwei einstellbaren oberen Grenzwerten verbunden ist, und mit einer Einstelleinrichtung, die mit dem Komparator zum Zu- und Abschalten der Heizeinrichtung (6) verbunden ist, wobei die Zähleinrichtung korrespondierende Einstellungen aufweist, bei denen ein niedrigerer oberer Grenzwert für die Temperatur häufiger überschritten werden muß als ein höherer oberer Grenzwert für die Temperatur, um den Alarm auszulösen.

Revendications

1. Sèche-linge, comportant un tambour rotatif (1) qui est perméable à l'air pour recevoir du linge humide, comprenant une entrée d'air (5) et un passage d'air depuis l'entrée d'air à travers le tambour vers un ventilateur (4) pour évacuer l'air par le passage d'air, un réchauffeur (6) étant disposé dans le passage d'air devant le tambour (1), lequel réchauffeur fournit essentiellement une puissance constante, un capteur de température (16) dans le passage d'air pour contrôler la température de l'air avant l'entrée dans le tambour, un dispositif de commande étant relié au capteur de température pour déconnecter le réchauffeur (6) quand la température dépasse une limite supérieure prédéterminée et pour reconnecter le réchauffeur (6) quand la température tombe au-dessous d'une limite inférieure prédéterminée, un filtre de peluches (14) disposé dans le passage d'air (13) entre le tambour et le ventilateur pour retenir les peluches du linge dans le tambour, et un dispositif de contrôle pour évaluer l'encrassement du filtre, ledit dispositif étant adapté pour fournir une alarme quand l'encrassement dépasse une limite prédéterminée,
caractérisé en ce que le dispositif de contrôle est constitué d'un dispositif de comptage qui déclenche l'alarme quand la température, dans un intervalle de temps prédéterminé, dépasse la limite supérieure un nombre prédéterminé de fois.

2. Sèche-linge selon la revendication 1, dans lequel le tableau de commande présente au moins deux réglages qui sont distingués par la limite supérieure pour la température,
caractérisé en ce que le dispositif de comptage présente des réglages correspondants pour lesquels une limite supérieure plus faible pour la température doit être dépassée plus fréquemment qu'une limite supérieure plus élevée pour la température de façon à déclencher l'alarme.

3. Sèche-linge selon la revendication 1, dans lequel le tableau de commande présente au moins deux réglages qui sont distingués par la limite supérieure pour la température,
caractérisé en ce que le dispositif de commande pour tous les réglages est relié au même capteur de température (16), en ce que le dispositif de commande est muni d'un dispositif de mesure pour mesurer la température, d'un comparateur relié au dispositif de mesure pour comparer la température mesurée à l'une d'au moins deux limites supérieures réglables, et d'un dispositif de réglage relié au comparateur pour connecter et déconnecter le réchauffeur (6), le dispositif de comptage ayant des réglages correspondants pour lesquels une limite supérieure plus faible pour la température doit être dépassée plus fréquemment qu'une limite supérieure plus élevée pour la température de façon à déclencher l'alarme.

Fig. 1

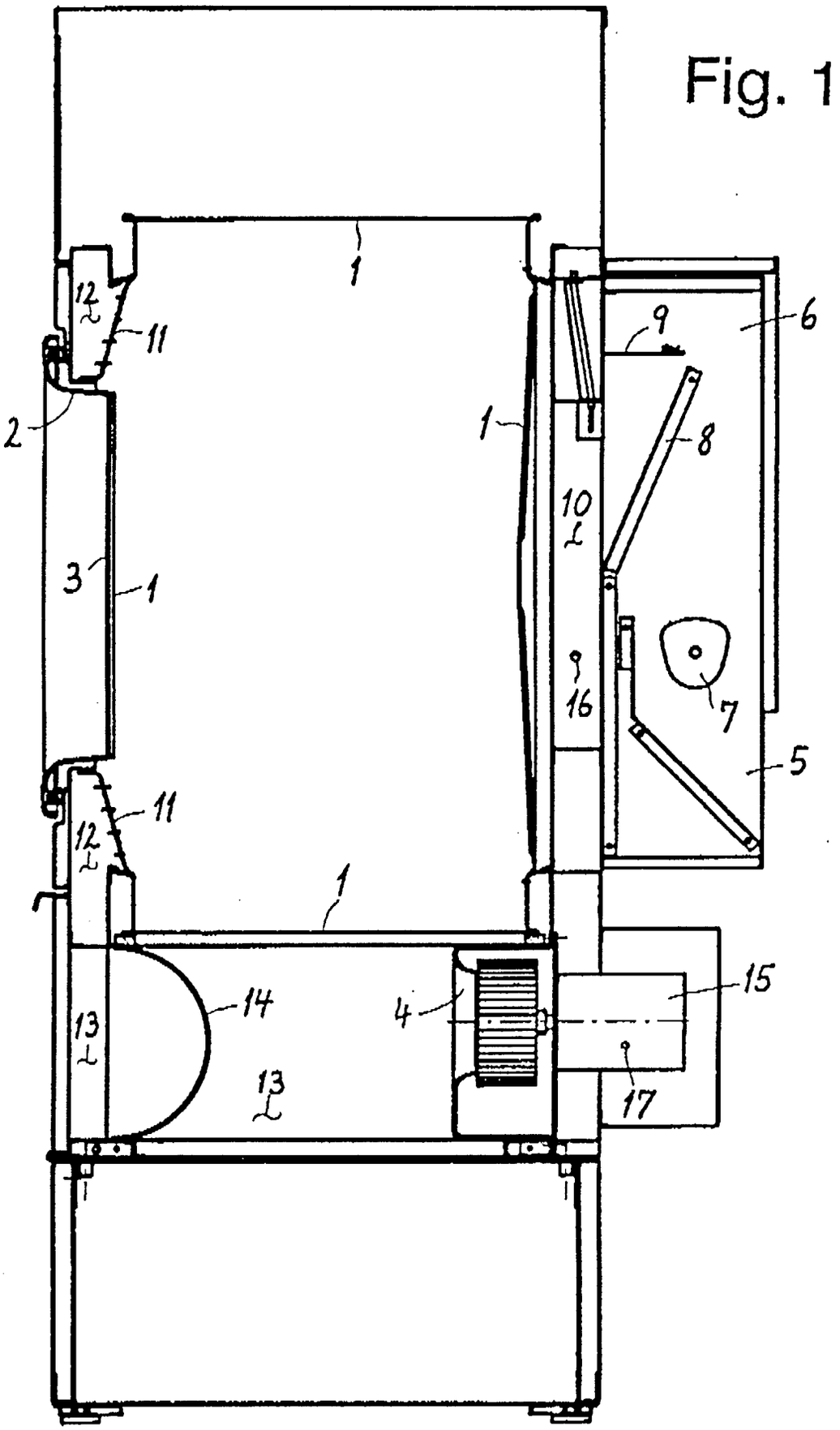

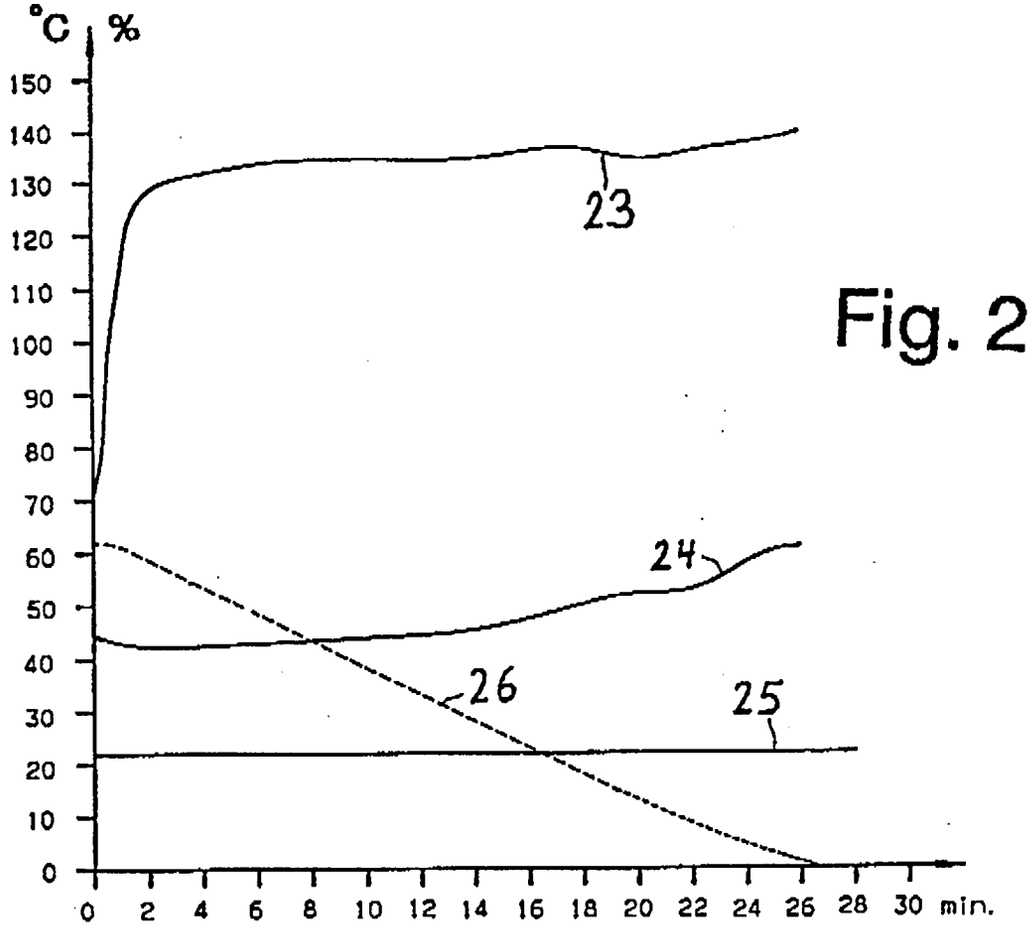
°C
%
150
140
130
120
110
100
90
80
70
60
50
40
30
20
10
0
23
24
26
25
0 2 4 6 8 10 12 14 16 18 20 22 24 26 28 30 min.

Fig. 2

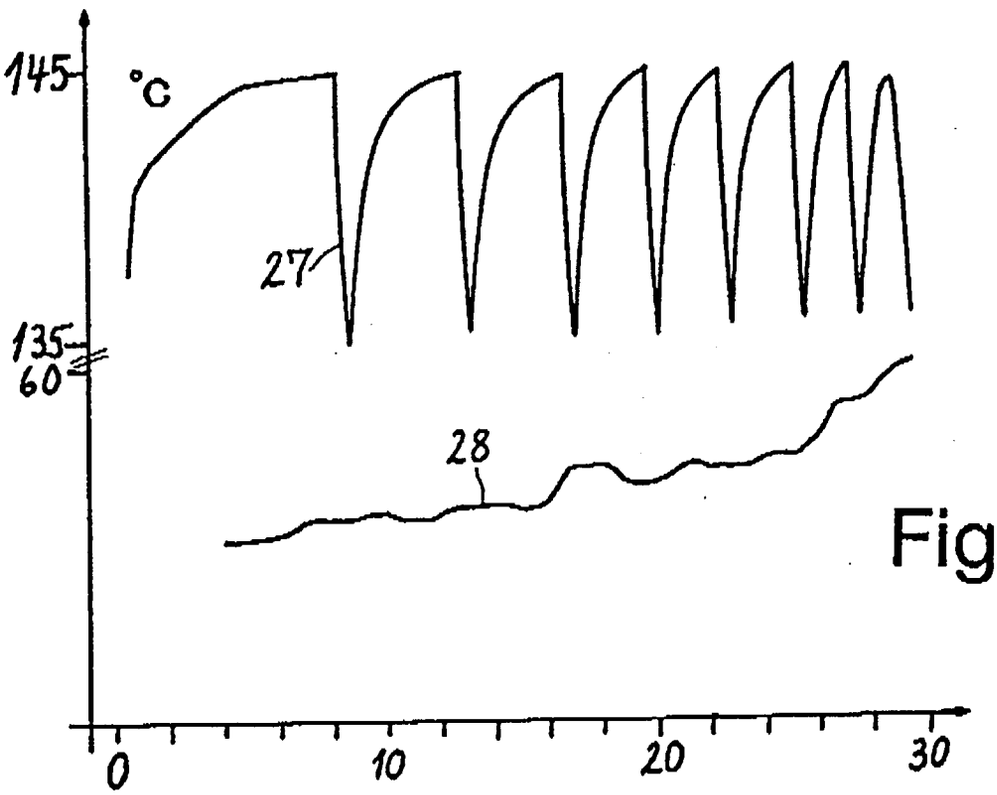
145
°C
27
135
60
28
0
10
20
30

Fig. 3

Fig. 4

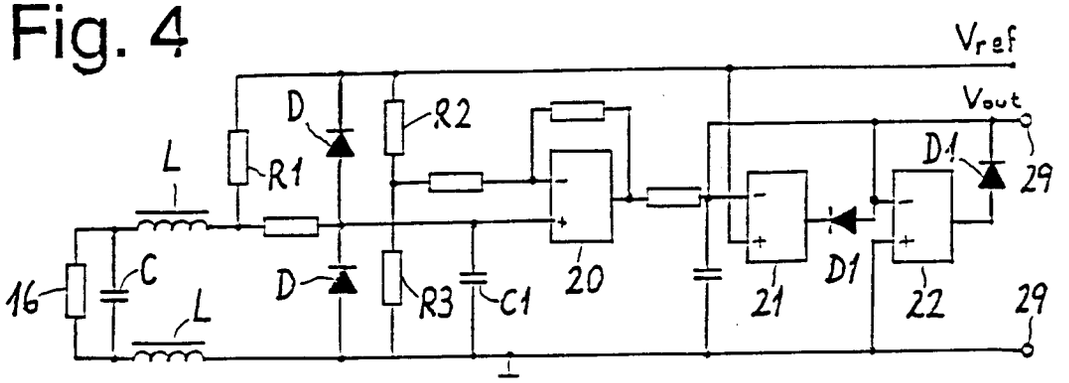
Vref
Vout
D
R2
R1
L
D1
29
16
C
D
R3
C1
20
21
D1
22
29
L

Fig. 5

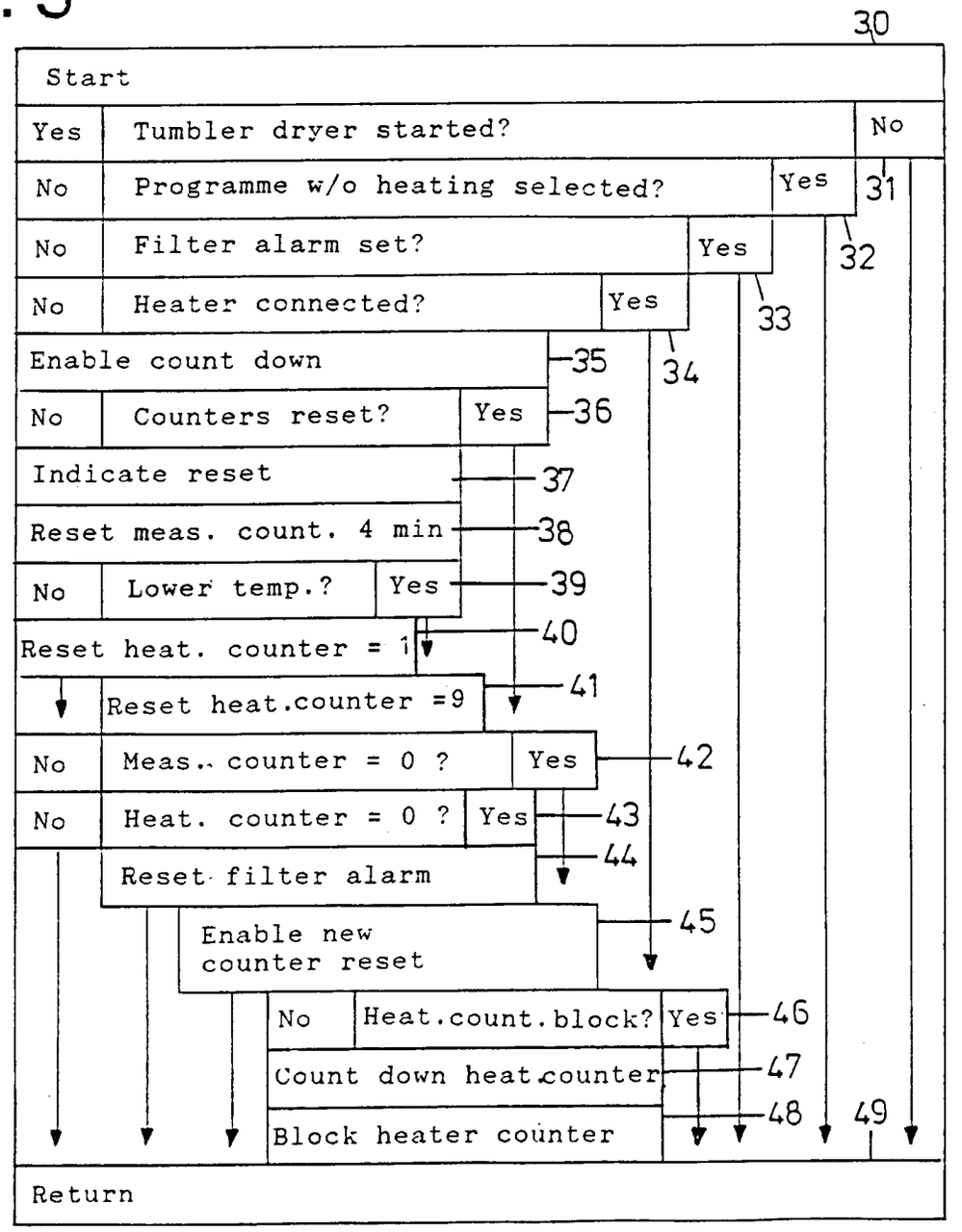
30
Start
Yes
Tumbler dryer started?
No
No
Programme w/o heating selected?
Yes
31
No
Filter alarm set?
Yes
32
No
Heater connected?
Yes
33
34
Enable count down
35
No
Counters reset?
Yes
36
Indicate reset
37
Reset meas. count. 4 min
38
No
Lower temp.?
Yes
39
Reset heat. counter = 1
40
Reset heat.counter =9
41
No
Meas.. counter = 0 ?
Yes
42
No
Heat. counter = 0 ?
Yes
43
44
Reset filter alarm
Enable new counter reset
45
No
Heat.count.block?
Yes
46
Count down heat.counter
47
Block heater counter
48
49
Return