(19) Europäisches Patentamt
European Patent Office
Office européen des brevets

(11) Publication number: **0 532 808 A1**

(12) EUROPEAN PATENT APPLICATION

(21) Application number: **91310611.8**

(51) Int. Cl.5: **A47K 10/28**

(22) Date of filing: **18.11.91**

(30) Priority: **19.09.91 JP 239780/91**

(43) Date of publication of application:
24.03.93 Bulletin 93/12

(84) Designated Contracting States:
CH DE FR GB IT LI NL SE

(71) Applicant: **SUNPAC CO LTD**
8-3 Nishinakajima 5-chome
Yodogawa-ku, Osaka(JP)

(72) Inventor: **Nishimura, Tatsuo**
2-7 Myojin 3-chome, Ohji-cho
Kitakatsuragi-gun, Nara(JP)

(74) Representative: **Abbie, Andrew Kenneth et al**
R.G.C. Jenkins & Co. 26 Caxton Street
London SW1H 0RJ (GB)

(54) Roll.

(57) A roll (21) for a towel dispenser has a roll body (22) and short fibers in the form of rigid monofilaments planted on the outer peripheral surface of the roll body. Such a roll (21) may also be provided on the outer periphery thereof with a layered foamed article (26) having independent air bubbles in recesses (28) and provided with a skin (27). The foamed article (26) is mounted on the outer peripheral surface of the roll (21) with the skin (27) removed to expose recesses (28) of the air bubbles.

FIG. 3

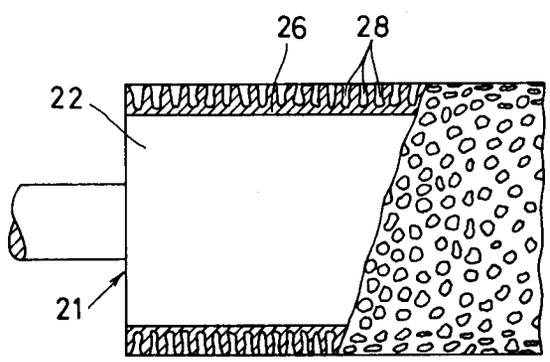

EP 0 532 808 A1

This invention relates to a roll provided with an anti-slip means on the outer periphery thereof.

As shown in Fig. 5, a towel dispenser has a roll A of an unused towel. The unused portion a is drawn out from the roll A and taken up to a take-up roll 1 after forming a loop a'.

In taking up a used portion a'' of the towel to the take-up roll 1, by drawing out the portion a from the roll A through the loop a', an upper driving roll 2 is rotated. A lower driving roll 4 is driven by the upper roll 2 through a transmission means 3 comprising a sprocket and a chain. Thus, the take-up roll 1 rotates since it has its bottom peripheral surface in contact with the top peripheral surface of the lower driving roll 4 by gravity.

In this state, the lower driving roll 4 is in contact with the peripheral surface of the used portion a'' taken up to the take-up roll 1. Thus, when the lower driving roll 4 rotates, the take-up roll 1 is rotated through the towel portion a''.

The upper driving roll 2 is provided on its outer periphery with an anti-slip means to catch the unused portion a of the towel. Thus, when the unused portion a is drawn out, the upper driving roll 2 is rotated. Its rotation is transmitted to the lower driving roll 4 through the transmission means 3 to the take-up roll 1. Since the take-up roll 1 is also provided on its outer periphery with an anti-slip means similar to that of the upper driving roll 2, the take-up roll 1 is rotated through the used portion a''.

The anti-slip means provided on the take-up roll 1 and the upper driving roll 2 is in the form of a web of sand paper 5 wound helically and secured to the rolls with an adhesive as shown in Fig. 6.

In this arrangement, the towel fiber tends to get caught on the abrasive grains of the sand paper at the pointed protruding ends thereof. If the towel is pulled hard, its fiber may tear. This shortens the life of the towel.

Another problem is that the abrasive grains wear with use. If worn excessively, the upper driving roll and the take-up shaft may slip with respect to the towel.

It is an object of this invention to provide a roll which does not damage the towel and which is free of slip with respect to the towel.

In order to solve the above problems, this invention provides a roll comprising a roll body and groups of short fibers in the form of rigid monofilaments planted in the outer peripheral surface of the roll body.

Further, there is provided a roll comprising a roll body and a layered foamed article having independent air bubbles and provided with a skin, said foamed article being mounted on the outer peripheral surface of said roll body with said skin removed to expose recesses of said air bubbles.

For example, the rolls according to this invention are used for the upper driving roll and the lower driving roll of a towel dispenser.

The roll provided with short fibers can prevent the roll from slipping with respect to the towel since its short fibers engage the surface of the towel.

In case of the roll having independent bubbles in the foamed article with the recesses exposed, the foamed article is pressed and resiliently deformed by the towel and slightly compressed, so that the towel is pressed tightly against the foamed article by impact resilience and is caught on the open edges of the exposed recesses. Thus, the roll is prevented from slipping on the towel.

According to the present invention, the short fibers planted on the outer peripheral surface of the roll body serve to prevent the roll from slipping with respect to the towel. They never tear the fiber of the towel.

A foamed article having independent air bubbles is provided on the outer peripheral surface of the roll body with its recesses exposed by removing its skin. A towel drawn onto the foamed article is pressed against the foamed article and caught on the open edges of the recesses. This prevents slips between the roll and the towel.

Other features and objects of the present invention will become apparent from the following description taken with reference to the accompanying drawings, in which:

Fig. 1 is a perspective view of the first embodiment of the roll according to this invention;

Fig. 2 is a vertical sectional front view of a portion of the same;

Fig. 3 is a partially cutaway front view of the second embodiment of the roll;

Fig. 4 is a vertical sectional front view showing the state before the skin is removed.;

Fig. 5 is a vertical sectional side view of a towel dispenser; and

Fig. 6 is a front view of a prior art article.

(First Embodiment)

As shown in Figs. 1 and 2, short fibers 23 in the form of more or less rigid monofilaments are planted in groups on the outer peripheral surface of a roll body 22. The short fibers 23 may be planted directly on the surface of the roll body 22 by electrostatic flocking. Otherwise, a substrate 24 tufted with the short fibers 23 may be secured to the peripheral surface of the roll body 22 with an adhesive.

The short fibers may be planted over the entire outer peripheral surface of the roll body 22 as shown or may be planted in a plurality of parallel rows so that such rows extend perpendicular to the

edges of the shaft.

The short fibers 23 are in the form of monofilaments made of a synthetic resin such as a synthetic fiber including nylon, polyester and polypropylene. Their diameter and length are determined so that they can catch the surface of towel in the towel dispenser (shown in Fig. 5) and prevent the rolls 21 of the upper driving roll and the lower driving roll in the towel dispenser from slipping. If they are made of nylon, their diameter should be about 100 - 500 microns and their length about 1 - 1.5 mm.

(Second Embodiment)

As shown in Figs. 3 and 4, a layered foamed article 26 having independent air bubbles is mounted on the outer peripheral surface of the roll body 22.

The foamed article 26 has a skin 27 adapted to be removed to expose recesses 28 of the bubbles.

The foamed article 26 having independent air bubbles is made e.g. of an ethylene-vinyl acetate copolymer or an ethylene-propylene rubber polyurethane. The skin 27 is removed e.g. by polishing.

In this arrangement, by pulling out a towel in the towel dispenser (shown in Fig. 5), the towel is pressed against the peripheral surfaces of the upper driving roll and the lower driving roll in the towel dispenser. Thus, the foamed article 26 on each roll is resiliently deformed and slightly compressed, so that the towel is pressed tightly against the foamed article by impact resilience and is caught on the open edges of the exposed recesses 28. Thus, the roll 21 is prevented from slipping against the towel.

From the foregoing it will be appreciated that each of the disclosed embodiments comprises a roll for transporting or taking-up sheet material said roll having means defining an outer surface for contacting the sheet material, said outer surface being cylindrical so as to be non-abrasive to the sheet material and said outer surface being discontinuous to provide a plurality of contacts between the sheet material and the outer surface to render the outer surface anti-slip with respect to the sheet material.

Claims

1. A roll for transporting or taking-up sheet material said roll having means defining an outer surface for contacting the sheet material, said outer surface being cylindrical so as to be non-abrasive to the sheet material and said outer surface being discontinuous to provide a plurality of contacts between the sheet material and the outer surface to render the outer surface anti-slip with respect to the sheet material.

2. A roll for a towel dispenser comprising a roll body and short fibers in the form of rigid monofilaments planted on the outer peripheral surface of said roll body.

3. A roll for a towel dispenser comprising a roll body and a layered foamed article having independent air bubbles in recesses and provided with a skin, said foamed article being mounted on the outer peripheral surface of said roll body with said skin removed to expose recesses of said bubbles.

FIG. 1

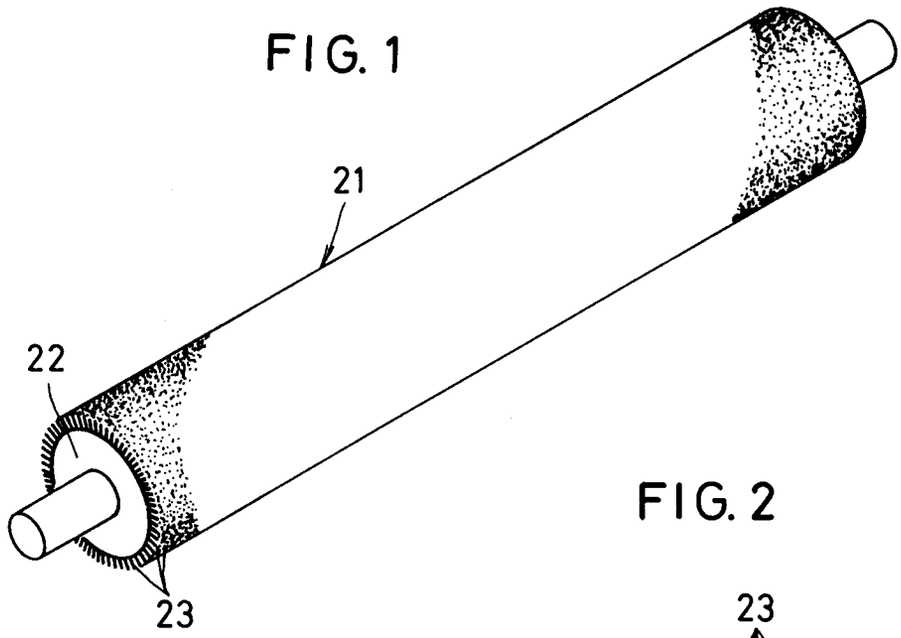

FIG. 2

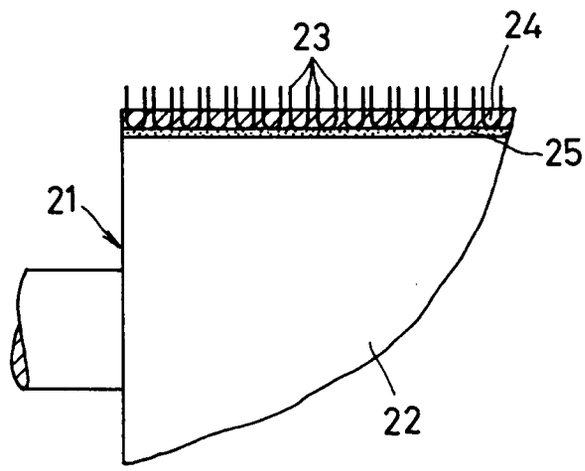

FIG. 3

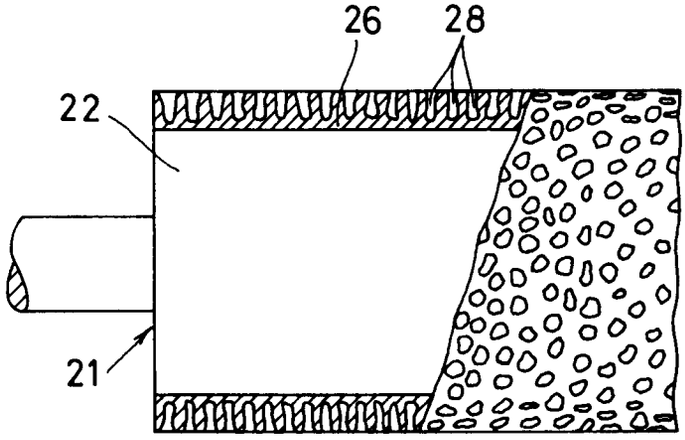

FIG. 4

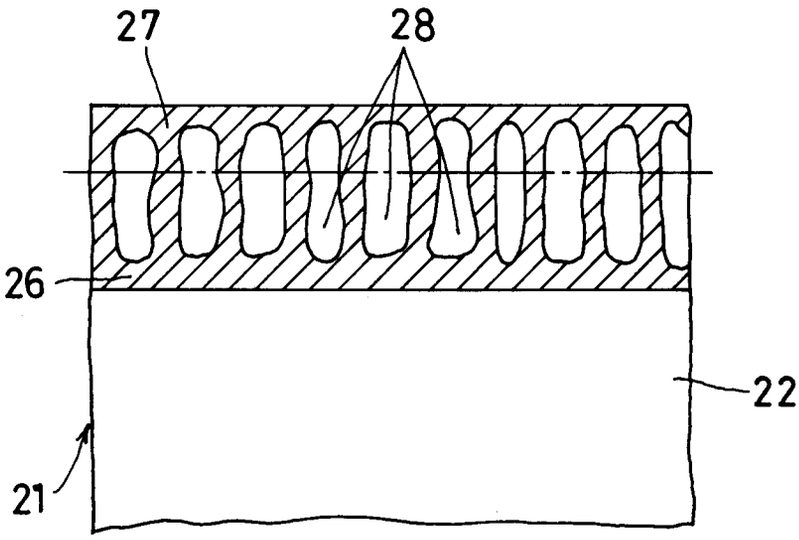

FIG. 6

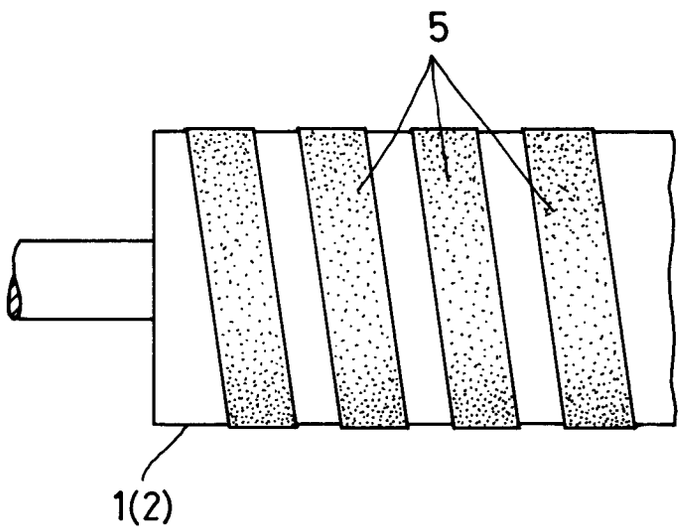

FIG. 5

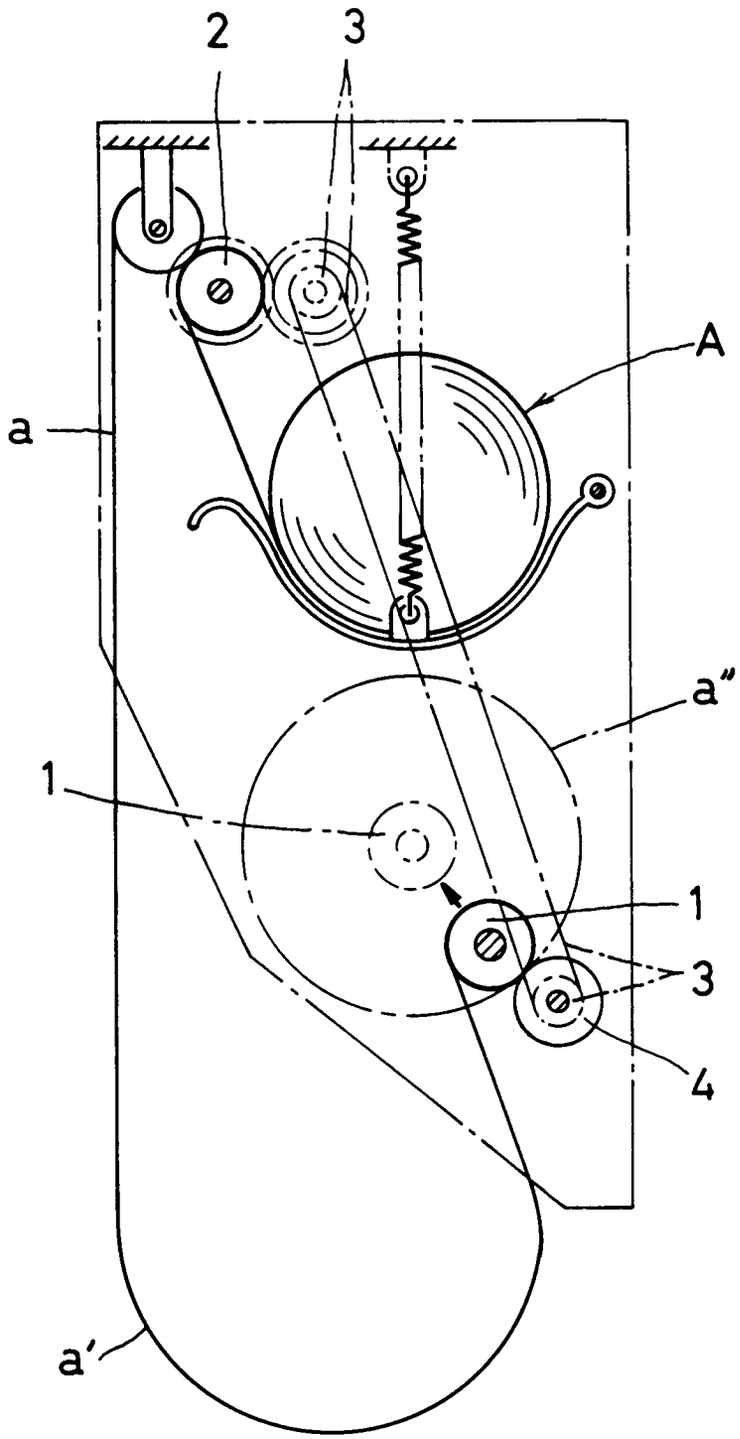

European Patent Office

EUROPEAN SEARCH REPORT

Application Number

EP 91 31 0611

DOCUMENTS CONSIDERED TO BE RELEVANT

Category	Citation of document with indication, where appropriate, of relevant passages	Relevant to claim	CLASSIFICATION OF THE APPLICATION (Int. Cl.5)
X	GB-A-732 768 (KNOX) * page 2, line 21 - line 69; figures 2-4 * ---	1,2	A47K10/28
X	GB-A-1 138 447 (STRATTWELL DEVELOPMENTS) * page 2, line 16 - line 49; figures * ---	1,2	
X	EP-A-0 119 687 (GLYNWED ENGINEERING) * page 7, line 4 - page 8, line 16; figures 3,4 * ---	1	
X	EP-A-0 269 424 (DAVID KENNEDY ENGINEERS HOLDING) * column 3, line 3 - column 4, line 16; figures 2-4 * ---	1	
Y	DE-A-2 007 604 (BOZEN) * page 6, line 1 - line 17; figure 1 * ---	1,3	
Y	US-A-3 864 778 (VOPAT ET.AL.) * column 1, line 38 - line 68 * * column 2, line 31 - line 60 * * column 3, line 6 - line 27; figure 2 * ---	1,3	TECHNICAL FIELDS SEARCHED (Int. Cl.5)
A	US-A-4 988 087 (SARDANO ET.AL.) * column 5, line 23 - column 7, line 16; figures 3A,3B * ---	2,3	A47K B65H B29C B43L
A	US-A-4 707 408 (IWASAWA ET.AL.) * column 2, line 27 - column 3, line 3; figures * ---	3	G03G
A	EP-A-0 286 571 (UNITED TECHNOLOGIES AUTOMOTIVE) * column 4, line 48 - column 5, line 8; figures 2,3 * -----	3	

The present search report has been drawn up for all claims

Place of search	Date of completion of the search	Examiner
THE HAGUE	07 DECEMBER 1992	HENKES R.

CATEGORY OF CITED DOCUMENTS

X : particularly relevant if taken alone
Y : particularly relevant if combined with another document of the same category
A : technological background
O : non-written disclosure
P : intermediate document

T : theory or principle underlying the invention
E : earlier patent document, but published on, or after the filing date
D : document cited in the application
L : document cited for other reasons

& : member of the same patent family, corresponding document