(19) Europäisches Patentamt
European Patent Office
Office européen des brevets

(11) Publication number : **0 550 392 A1**

(12) EUROPEAN PATENT APPLICATION

(21) Application number : **92830689.3**

(22) Date of filing : **23.12.92**

(51) Int. Cl.[5] : **D06F 43/08**

(30) Priority : **24.12.91 IT BO910491**

(43) Date of publication of application :
07.07.93 Bulletin 93/27

(84) Designated Contracting States :
DE ES FR GB IT

(71) Applicant : **AMA UNIVERSAL S.p.A.**
Via C. Bonazzi 2
I-40012 Castelmaggiore (Bologna) (IT)

(72) Inventor : **Zucchini, Guido**
Via del Lavoro, 6
I-40012 Castelmaggiore (Bologna) (IT)

(74) Representative : **Pederzini, Paolo**
c/o BUGNION S.p.A. Via dei Mille, 19
I-40121 Bologna (IT)

(54) A dry-cleaning plant for various articles.

(57) The invention relates to a dry-cleaning plant (1) for the cleaning of various articles by means of solvents or other liquid products, of the type comprising in series, as its cleaning circuit, a tank (2) for the containing of the dry-cleaning liquid, a cleaning drum (8), a circulation pump (20) of the said liquid and a filter (29) for the said liquid, further comprising in series a drying and return circuit of the cleaning liquid, the said cleaning drum (8), a ventilator (30) for the liquid circulation and a condenser-separator system (33) connected to the drum (8) itself at the end of the said drying circuit, the said plant (1) further comprising a distillation apparatus (3), returningly connected to the said tank (2) and to a condensing device (15) for purifying the cleaning liquid, characterised by the fact that the said drum (8) is housed in a chamber (9) of the said distillation apparatus (3) and is externally heated by the distillation vapours.

FIG 2

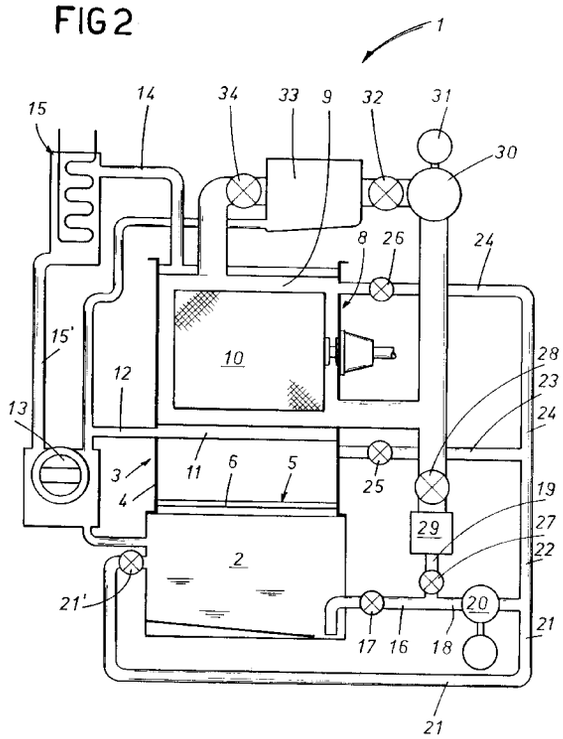

EP 0 550 392 A1

The invention relates to a plant for the dry-cleaning of various articles.

In particular, the present invention has as its object a plant of the above-mentioned type which can be used, for example, in the dry-cleaning of articles of clothing or in the cleaning, by means of low-boiling temperature solvents, of metallic articles.

Plants of this type in the prior art essentially comprise a tank aimed at containing, more often than not, a liquid-state solvent, pump means able to convey the solvent towards a container of the tub containing the articles to be cleaned, a distillation apparatus able to receive the solvent from the said tank after use with the purpose of vaporizing it after use, separating it thus from the polluting substances in it, and a condensation apparatus to receive the solvent vapours coming from the distillation apparatus and to cause the cooling and consequent condensation. Heating means usually form part of the aforesaid plants, which heating means produce the heating of the solvent to be used for the dry-cleaning of the said articles, a separator device to remove from the liquid-state sovent coming from the above-mentioned condensation and resepctively distillation apparatus any traces of water still present and any other impurity with a specific weight different from that of the solvent, and a drying apparatus which, by means of sending heated air, causes the evaporation of the sovent present on the washed articles at the end of the cleaning cycle.

In plants of the above-considered type it is necessary to use a considerable quantity of energy in order to produce, if envisaged, the above-mentioned heating of the dry-cleaning liquid and in any case of the said drying "air", and this fact considerably increases the working costs.

Further in order to determine the complete condensation of the solvent vapours, especially those coming from the distillation apparatus, it is necessary to use condensation apparatus of considerable potential, which, apart from being expensive in themselves, need for the functioning a considerable quantity of energy.

The aim of the present invention is thus that of eliminating the above-mentioned drawbacks, by providing a dry-cleaning plant able to operate correctly with a well-contained quantity of energy with respect to the energy necessary for the functioning of prior art dry-cleaning plants, and which can be realised relatively economically.

The invention, as it is characterised in the claims which follow, solves the problem of providing a plant for the dry-cleaning of various articles, of the type comprising for example in series, a dry-cleaning circuit, a tank for the containing of the dry-cleaning liquid, a dry-cleaning drum, a circulation pump of the said liquid and a filter for the said liquid, further comprising in series a drying and return circuit of the cleaning liquid, the said cleaning drum, a ventilator for the liquid circulation and a condenser-separator system connected to the drum itself at the end of the said drying circuit, the said plant further comprising a distillation apparatus, returningly connected to the said tank and to a condensing device for purifying the cleaning liquid, characterised by the fact that the said drum is housed in a chamber of the said distillation apparatus and is externally heated by the distillation vapours.

Preferably, the said plant comprises a collection bath of the cleaning liquid condensed on contact with the tub, arranged inside the said distillation apparatus below the said tub, the said collection bath communicating with a separating apparatus of foreign substances from the said liquid.

The advantages and characteristics of the present invention will better emerge from the detailed description that follows, made with reference to the accompanying drawings, which represent a preferred embodiment here illustrated in the form of a non-limiting example, and in which:

- Figure 1 shows a schematic front-elevation view, partially in block form, of a dry-cleaning plant made according to the present invention; and
- Figure 2 shows a further frontal view of the dry-cleaning plant of figure 1.

In the following description reference will be made to the use of a solvent as a cleaning liquid: in practice the cleaning liquid would not necessarily be a solvent.

With reference, in particular, to figure 1, 1 denotes in its entirety a plant for the dry-cleaning of various articles (not illustrated), comprising a container tank 2 for the solvent in liquid state., arranged below a distillation apparatus 3 comprising a box structure 4 exhibiting a lower wall 5 which is slightly inclined and arranged in contact with an underlying heating element 6, external to or incorporated into the said box structure 4. A lower portion of the box structure 4 communicates with the external atmosphere through a passage 7, normally closed by a mobile wall internal to the said distillation apparatus 3. At the level of an upper portion, the box structure 4 contains a so-called "drum" 8, defining internally a container chamber 9 of a tub 10, perforated and endowed with the possibility of rotary motion about a horizontal axis, destined internally to house the articles to be cleaned. Immediately below the drum 8, inside the box structure 4 a collection bath 11 is housed, exhibiting its concavity upturned and facing the entire upper internal surface of the drum 8, which drum 8 communicates, through a conduit 12, with a separator apparatus 13 of known type for the removal of water or other impurities from the liquid-state solvent, as will become clearer hereinafter. An upper portion of the box structure 4 communicates, through a conduit 14, with

a condenser device 15 of known type able to perform a cooling action on the solvent vapours which reach it, as will become clear hereinafter, through the said conduit 14.

According to the drawings, in particular in figure 2, a lower portion of the tank 2, arranged to the right of figure 2, communicates through a conduit 16 along which a valve 17 is arranged, with a junction from which two conduits 18 and 19 fork.

The conduit 18 substantially constitutes a continuation of the conduit 16 and communicates with a pump means 20, then to continue beyond the pump means 20 and terminate in a further junction from which two further conduits 21 and 22 fork.

The conduit 21 enters, crossing a valve 21', into a portion of the tank 2 arranged onthe left of figure 2, while the conduit 22 communicates with a further joint from which fork two further conduits 23 and 24, respectively connecting the conduit 22, through respective valves 25 and 26, with the inside of the box structure 4 and with an upper zone of the container chamber 9 inside the drum 8. The said conduit 19 communicates, through two valves 27 and 28 (respectively lower and upper in figure 2) between which a waste filtering element 29 is interpositioned, with a lower portion of the container chamber 9 and an inlet mouth of a ventilator 30 actionable through a motor 31. The inlet mouth of the said ventilator 30 is connected, through a valve 32, with a refrigerating unit or a condenser-separator system 33 exhibiting two outlets, the first of which, arranged at higher level and through which air and solvent vapours can flow, communicates through a valve 34 with an upper portion of the container chamber 9, and the second of which, arranged below and through which liquid-state solvent can flow, intersects the said conduit 12 to return to the separator apparatus 13.

Now the functioning of the plant 1 will be described, considering the distillation of the solvent effected with a continuous cycle.

The description begins with solvent already inside the distillation apparatus 3, during the phase of distillation itself.

During the cleaning phase, the liquid-state solvent is taken from the tank 2 by means of the pump means 20 (with valves 17 and 26 open) and sent into the cleaning drum 8 through conduits 16, 18, 22 and 24. When the solvent has to be unloaded by the drum 8 it returns, through conduit 19, valves 27 and 28 and the filtering element 29, towards the inlet mouth of the pump means 20, which, with the valve 21' closed and the valve 25 open, sends the said solvent to the distillation apparatus 3; if the valve 21' were partially open the solvent might be in part re-sent towards the tank 2.

When the distillation apparatus 3 is activated, the solvent vapour produced, under the effect of the heating element 6, strikes the external surface of the drum 8, causing, without the necessity of consuming energy beyond that necessary to produce the distillation of the solvent itself, the continuous heating of the solvent contained in it. During the course of the said heating of the solvent, the said vapour produced by effect of the distillation condenses in part on contacrt with the external surface of the drum 8, and falls into the collection bath 11, then reaching, through the conduit 12, the separator apparatus 13. The vapour which is not condensed on contact with the external surface of the drum 8 reaches, through the conduit 14, the condenser device 15, which, having to produce the condensation of only a part of the distillation vapour, can be undersized with respect to the condensing devices used in prior art dry-cleaning plants. The solvent condensed by means of the condenser device 15 reaches the separator apparatus 13 through the conduit 15'.

Once the cleaning has been finished and the solvent has been completely unloaded from the drum 8 (the solvent can be taken only to the distillation apparatus 3, or partially to the distillation apparatus 3 and partially to the tank 2, depending on the setting of the valves 25 and 21'), the drying phase of the articles contained in the tub 10 is proceeded to. To this end, the valves 26 and 28 are closed, and with valves 32-34 open, the motor 31 is started to cause the ventilator 30 to rotate. Following this, a flow of air which is heated on contact with the internal wall of the drum 8 which is in its turn heated, as has already been indicated, by means of the distillation vapour and without its being necessary to use external energy, gradually causes internally to the container chamber 9 of the drum 8 an evaporation of the solvent from the articles contained in the tub 10, and inside the condenser-separator system 33 a progressive condensation of the said solvent vapours; the condensed solvent thus reaches the separator apparatus 13 and thence returns into the tank 2.

Once the drying of the articles has been completed, and all of the valves present inthe plant 1 have been closed to avoid the exiting to the external atmosphere of solvent vapours, the tub 10 can be opened in order to take out the washed articles. The said operation can be preceded, according to known methods, by a deodorising phase of the articles, by placing the cleaning drum in communication with air from outside the room where the machine is located.

All of the preceding shows clearly how the plant 1 described fully attains the stated aims, since, thanks to the use of distillation vapours for the heating of the drum 8, it is able to operate correctly with a reduced amount of energy with respect to the energy requirement for the functioning of dry-cleaning plants of known type.

Further, thanks to the said undersizing of the condenser device 15 with respect to condenser devices of traditional type plants, the plant 1 has relatively

reduced production costs.

According to a possible further embodiment of the invention, the drum 8 could exhibit a communication opening with the inside of the box structure 4, closed by a valve 35. During the final cleaning phase of the articles contained in the tub 10, with the opening of the valve 35, part of the solvent vapours deriving from the distillation of the solvent, entering inside the drum 8 and coming into contact with the washed articles, tend to condense and determine a sort of final rinse of the articles washed with "distilled" solvent.

Furthermore, the solvent distillation cycle could be discontinuous during the whole cleaning and drying cycle of the articles to be cleaned, and, for example be activated only during the drying phase of the said articles.

Claims

1. A plant for the dry-cleaning of various articles, of the type comprising, for example in series, as its cleaning circuit, a tank (2) for the containing of the dry-cleaning liquid, a cleaning drum (8), a circulation pump (20) of the said liquid and a filter (29) for the said liquid, further comprising in series a drying and return circuit of the cleaning liquid, the said cleaning drum (8), a ventilator (30) for the liquid circulation and a condenser-separator system (33) connected to the drum (8) itself at the end of the said drying circuit, the said plant (1) further comprising a distillation apparatus (3), returningly connected to the said tank (2) and to a condensing device (15) for purifying the cleaning liquid, characterised by the fact that the said drum (8) is housed in a chamber (9) of the said distillation apparatus (3) and is externally heated by the distillation vapours.

2. A plant for the dry-cleaning of various articles as in claim 1, characterised by the fact of comprising a collection bath (11) of the cleaning liquid condensed on contact with the cleaning drum (8), arranged inside the said distillation apparatus (3) below the said drum (8), the said collection bath (11) being in communication with a separator apparatus (13) of foreign substances from the said cleaning liquid.

3. A plant for the dry-cleaning of various articles, as in claim 1, characterised by the fact that the said distillation apparatus (3) is continuously activated.

4. A plant for the dry-cleaning of various articles as in claim 1, characterised by the fact that the said distillation apparatus (3) is discontinuously activated.

5. A plant for the dry-cleaning of various articles as in claim 1, characterised by the fact that the said cleaning drum (8) exhibits an opening normally closed by a valve (35), the said opening permitting the entrance inside the container chamber (9) of vapours deriving from the distillation.

FIG1

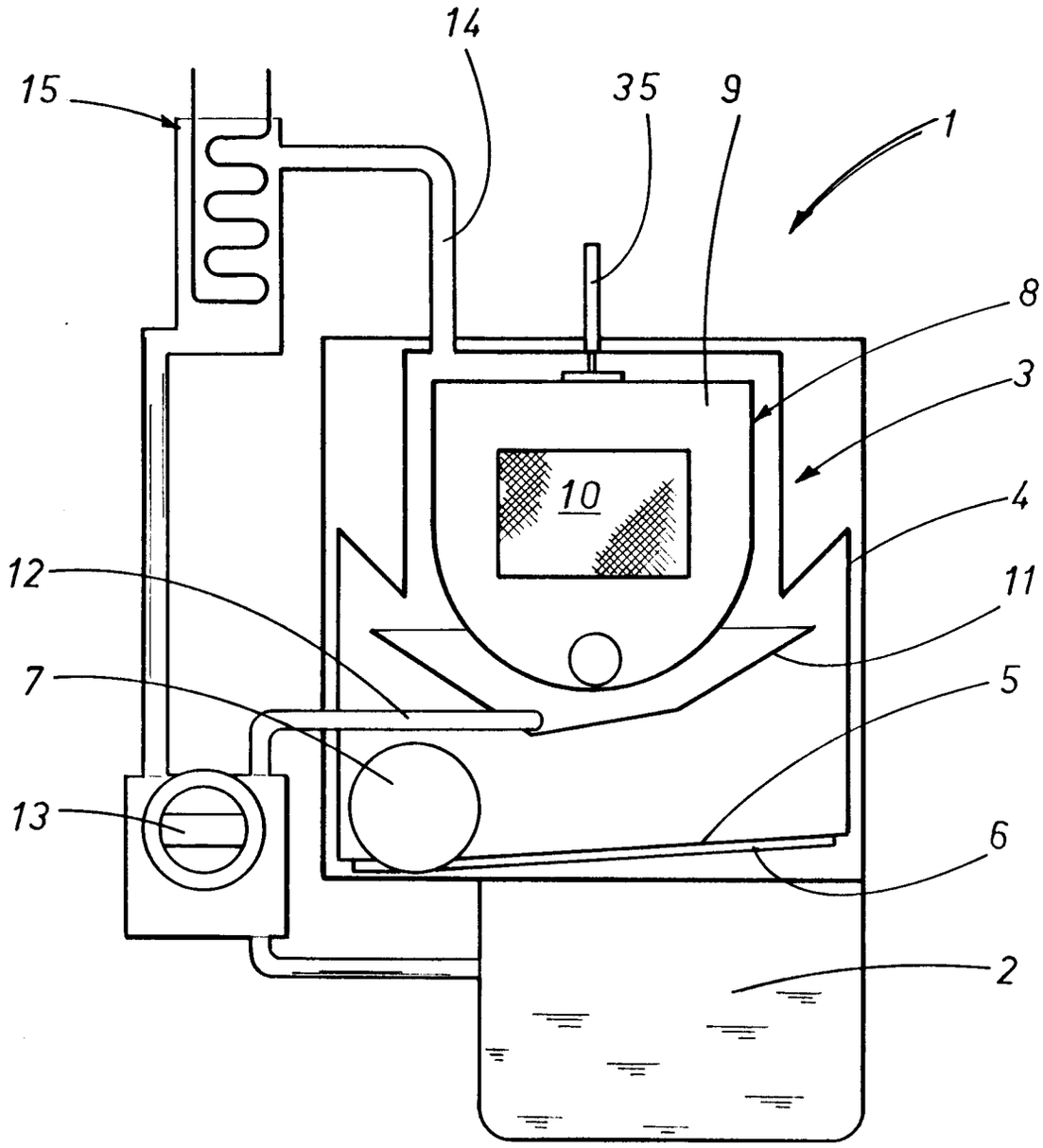

FIG 2

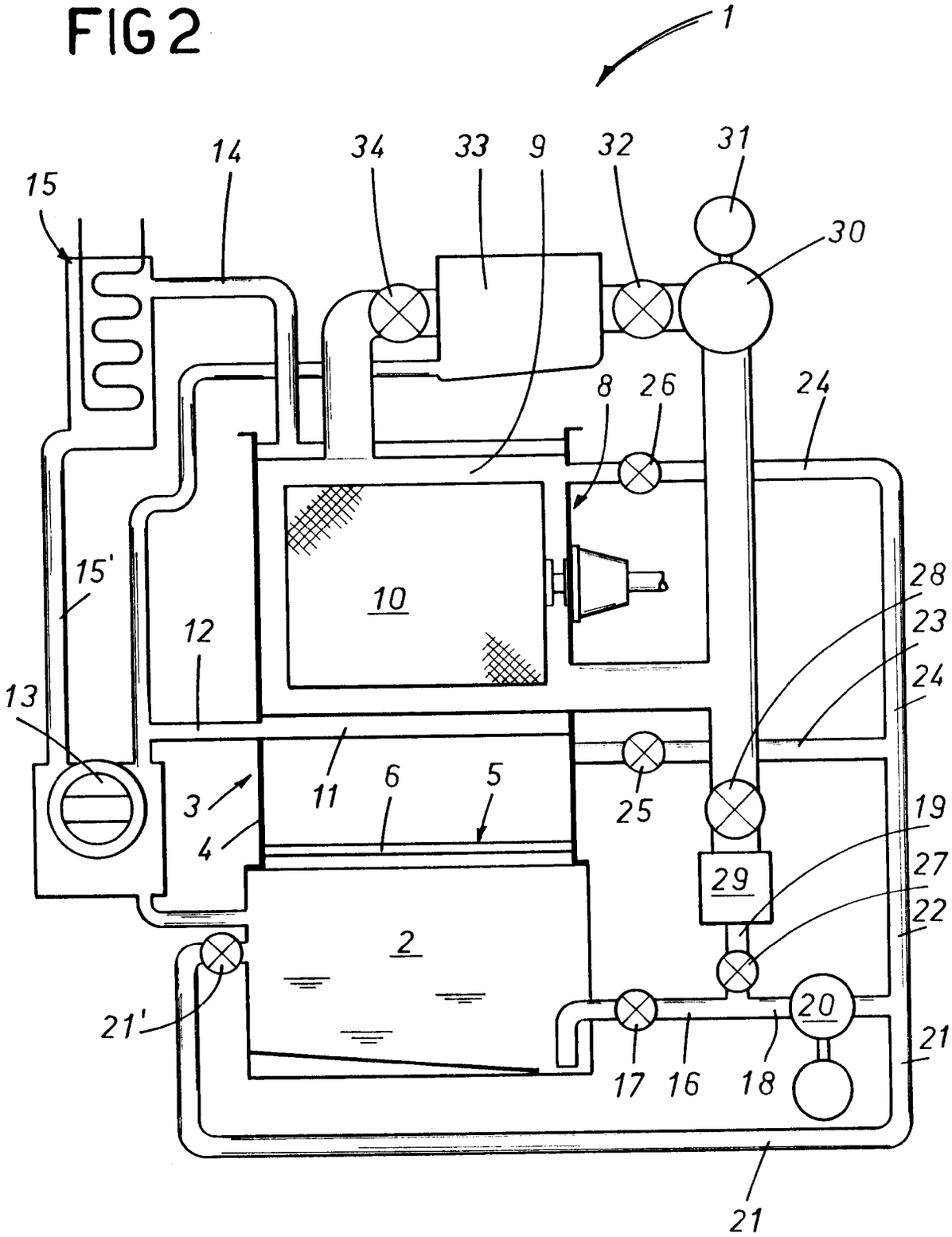
1
14
34
33
9
32
31
15
30
8
26
24
15'
10
28
23
12
24
13
11
6
5
25
3
4
19
29
27
22
2
21'
20
21
17
16
18
21

European Patent Office

EUROPEAN SEARCH REPORT

Application Number

EP 92 83 0689

DOCUMENTS CONSIDERED TO BE RELEVANT

Category	Citation of document with indication, where appropriate, of relevant passages	Relevant to claim	CLASSIFICATION OF THE APPLICATION (Int. Cl.5)
A	DE-A-2 724 267 (BÖWE MASCHINENFABRIK GMBH) * claims 1,4,5; figures * ---	1	D06F43/08
A	DE-A-2 408 554 (W. SCHÖNE) * claims 1-6; figure 2 * ---	1	
A	FR-A-2 538 010 (S. DAZZI) * claims 1-4; figure * -----	1	

TECHNICAL FIELDS SEARCHED (Int. Cl.5)

D06F

The present search report has been drawn up for all claims

Place of search	Date of completion of the search	Examiner
THE HAGUE	19 APRIL 1993	COURRIER G.L.A.

CATEGORY OF CITED DOCUMENTS

X : particularly relevant if taken alone
Y : particularly relevant if combined with another document of the same category
A : technological background
O : non-written disclosure
P : intermediate document

T : theory or principle underlying the invention
E : earlier patent document, but published on, or after the filing date
D : document cited in the application
L : document cited for other reasons

& : member of the same patent family, corresponding document

EPO FORM 1503 03.82 (P0401)