(19) Europäisches Patentamt
European Patent Office
Office européen des brevets

(11) EP 0 647 486 B1

(12) EUROPEAN PATENT SPECIFICATION

(45) Date of publication and mention of the grant of the patent:
28.01.1998 Bulletin 1998/05

(51) Int. Cl.[6]: **B21B 13/02**

(21) Application number: **93116369.5**

(22) Date of filing: **08.10.1993**

(54) Rolling mill

Walzwerk

Laminoir

(84) Designated Contracting States:
DE FR GB IT

(43) Date of publication of application:
12.04.1995 Bulletin 1995/15

(73) Proprietor:
MITSUBISHI JUKOGYO KABUSHIKI KAISHA
Tokyo 100 (JP)

(72) Inventors:
- **Hashimoto, Shoichi,**
  c/o Mitsubishi Jukogyo K. K.
  Hiroshima-shi, Hiroshima-ken (JP)
- **Hayashi, Kanji,**
  c/o Mitsubishi Jukogyo K. K.
  Hiroshima-shi, Hiroshima-ken (JP)
- **Kajihara, Tetsuo,**
  c/o Mitsubishi Jukogyo K. K.
  Hiroshima-shi, Hiroshima-ken (JP)
- **Morimoto, Kazuo,**
  c/o Mitsubishi Jukogyo K. K.
  Hiroshima-shi, Hiroshima-ken (JP)
- **Kaneko, Toru**
  Kashima-gun, Ibaraki-ken (JP)
- **Kamata, Shunji**
  Kashima-gun, Ibaraki-ken (JP)
- **Koga, Tadashi**
  Sawara-shi, Chiba-ken (JP)
- **Kaga, Yuji,**
  Hoshin-Ryo C-206
  Kashima-gun, Ibaraki-ken (JP)

(74) Representative:
Henkel, Feiler, Hänzel & Partner
Möhlstrasse 37
81675 München (DE)

(56) References cited:
WO-A-90/00450 **CH-A- 673 128**

- **PATENT ABSTRACTS OF JAPAN vol. 11, no. 34 (M-558)31 January 1987 & JP-A-61 202 704 (MITSUBISHI HEAVY IND.) 8 September 1986**
- **PATENT ABSTRACTS OF JAPAN vol. 15, no. 49 (M-1078)6 February 1991 & JP-A-02 284 711 (MITSUBISHI HEAVY IND.) 22 November 1990**
- **PATENT ABSTRACTS OF JAPAN vol. 15, no. 354 (M-1155)6 September 1991 & JP-A-03 138 006 (MITSUBISHI HEAVY IND.) 12 June 1991**
- **PATENT ABSTRACTS OF JAPAN vol. 6, no. 86 (M-131)25 May 1982 & JP-A-57 025 206 (SUMITOMO METAL IND.) 10 February 1982**
- **PATENT ABSTRACTS OF JAPAN vol. 11, no. 140 (M-586)8 May 1987 & JP-A-61 279 305 (ISHIKAWAJIMA HARIMA HEAVY IND.) 10 December 1986**

Note: Within nine months from the publication of the mention of the grant of the European patent, any person may give notice to the European Patent Office of opposition to the European patent granted. Notice of opposition shall be filed in a written reasoned statement. It shall not be deemed to have been filed until the opposition fee has been paid. (Art. 99(1) European Patent Convention).

EP 0 647 486 B1

Description

The present invention relates to a rolling mill provided with a roll-crossing device as defined in the preamble of claim 1.

Description of the Prior Art:

Fig. 8 shows a general concept of one example of a cross-roll type rolling mill in the prior art, in which upper and lower work rolls 11 and backup rolls 21 are made to cross with each other by turning them in the opposite directions to each other between the upper and lower rolls about their central portions in the axial direction of the rolls, and a sheet crown of a rolled material S is controlled by adjusting this cross angle.

In addition, Fig. 9 shows a backup roll in one example of a sleeve roll type rolling mill in the prior art in cross-section, and this backup roll 10 is composed of a roll support shaft 1 which is provided with a central eccentric portion 2, intermediate eccentric portions 3 and opposite end eccentric portions 4 and is rotatable, outer rings divided into 5 pieces along its axial direction and respectively fitted around the respective eccentric portions 2, 3 and 4 via rolling bearings 5 in a freely rotatable manner, that is, divided rolls 7, 8 and 9, and a sleeve 6 accommodating these respective divided rolls 7, 8 and 9 and adapted to rotate jointly with the respective divided rolls 7, 8 and 9 according to rotation of the work rolls 11.

Fig. 10 shows eccentric states of the centers C_2, C_3 and C_4 of the respective eccentric portions 2, 3 and 4 with respect to the axis C_1 of the roll support shaft 1 and rotation loci of the respective divided rolls 7, 8 and 9, and crown patterns of the work roll 11 at the respective rotation angles are as shown in Fig. 11. And, a sheet configuration of a rolled material S is controlled by depressing the work roll 11 with the roll support shaft 1 rotated to an appropriate angle.

However, among the prior art as described above, the heretofore known cross-roll type rolling mill shown in Fig. 8 has a shortcoming that while a sheet crown such as simple center elongation, end elongation or the like of a rolled material can be controlled by gap adjustment between the upper and lower work rolls which corresponds to a V-shaped crown of a work roll caused by roll bending, complex elongation in which center elongation, middle elongation, end elongation and the like coexist cannot be controlled.

Also, in the rolling mill having the sleeve roll type backup rolls explained above with reference to Figs. 9 to 11, there is a shortcoming that while it is possible to control the above-described complex elongation by forming a V-, W-, A- or M-shaped crown, if amounts of eccentricity of the respective divided rolls are made too large in order to make a crown pattern large, then loads borne by the respective rolling bearings would increase, and hence lives of the rolling bearing and the sleeve would be lowered.

From JP-A 61-202 704 and JP-A 57 025 206 there is known a cross-roll type rolling mill (CM) with a pair of upper and lower work rolls provided with upper and lower backup rolls. The work rolls are provided with a bending device at their respective ends and the backup rolls are variable crown rolls (VCR) which are formed by a sleeve fitted over an arbor and a cylindrical chamber provided therebetween and supplyable with hydraulic pressure to elastically deform the backup roll.

The general structure of a sleeve type backup roll (SBUR) is described in JP-A 2-284 711 and JP-A 3-138 006, however, only in connection with a regular (parallel) type rolling mill.

SUMMARY OF THE INVENTION:

It is the object of the present invention to provide a rolling mill, wherein control of extremely diversified crown patterns can be effected for the work rolls.

According to the present invention there is provided a rolling mill including a roll-crossing device for making respective axes of upper and lower work rolls and upper and lower backup rolls held in circumferential contact with said work rolls cross with each other within a plane in parallel to a rolled sheet surface; wherein said upper and/or said lower backup roll is/are constructed as a sleeve-roll type backup roll, in which the backup roll is divided into three or more rolls along its axial direction, said plurality of divided rolls are rotatably mounted as held eccentric on one roll support shaft whose rotary angle is adjustable, and said plurality of divided rolls are all accommodated with one sleeve.

In a preferred embodiment this rolling mill includes drive means for normally and reversely rotating said work rolls and making a rolled metal sheet material reciprocate between said work rolls.

According to the present invention, a reversible type rolling mill in which the work rolls are rotated in the normal and reverse directions and a rolled metal sheet is made to reciprocate between the work rolls, can be formed.

In addition, the rolling mill according to the present invention having the above-featured construction can effectively reveal its configuration Control capability, when it is disposed at the location where a rolled material forming a final product is to be rolled, that is, as a rear stage rolling mill including at least the last stage in a train of a reversible rolling mill and cold or hot steel belt rolling mills.

Furthermore, the rolling mill according to the present invention can be constructed with the sleeve-roll type backup roll having the above-mentioned construction employed as either one of the upper and lower backup rolls.

As described above, with the rolling mill according to the present invention, a sheet crown of a rolled material and complex sheet configuration defects such as complex elongations or the like can be simultaneously controlled by forming at least either one of upper and lower backup rolls held in circumferential contact with work rolls as a sleeve-roll type backup roll, forming a crown pattern on the work roll by depressing that backup roll, further making at least the upper and lower work rolls cross with each other, adjusting the cross angle, and forming an optimum crown pattern on the work roll by adding a V-shaped crown to the above-described crown pattern.

The above-mentioned and other objects, features and advantages of the present invention will become more apparent by reference to the following description of one preferred embodiment of the present invention taken in conjunction with the accompanying drawings.

BRIEF DESCRIPTION OF THE DRAWINGS:

In the accompanying drawings:

Fig. 1 is a side view partly cut away showing an essential part of a rolling mill according to the present invention, which comprises a roll-crossing device and sleeve-roll type backup rolls;
Fig. 2 is a front view partly cut away of the rolling mill shown in Fig. 1;
Fig. 3 is a diagram showing crown patterns realized in a rolling mill according to one preferred embodiment of the present invention;
Fig. 4 is a schematic cross-section view showing a sheet crown in a rolled sheet;
Fig. 5 is an illustration showing dimensions of rolling mills used in numerical calculation of a controllable range of a sheet crown by means of three kinds of rolling mills;
Fig. 6 is a diagram showing results of calculation of a controllable range of a sheet crown by means of three kinds of rolling mills;
Fig. 7 is a diagram showing a crown of a rolled sheet when various crown control functions were used in a rolling mill according to the present invention;
Fig. 8 is a schematic side view showing a general concept of one example of a cross-roll type rolling mill in the prior art;
Fig. 9 is a side view partly in cross-section of a backup roll in one example of a sleeve roll type rolling mill in the prior art;
Fig. 10 is a schematic view showing displacement of axes of respective divided eccentric rolls with respect to an axis of a roll support shaft as well as rotation loci of the respective divided eccentric rolls within a sleeve roll; and
Fig. 11 shows different crown patterns formed by the sleeve roll type backup roll at its different rotary angle position.

DESCRIPTION OF THE PREFERRED EMBODIMENT:

Now the present invention will be described in greater detail in connection to one preferred embodiment thereof with reference to Figs. 1 to 7. It is to be noted that in these figures, members and parts equivalent to those of the prior art apparatus shown in Figs. 8 to 11 are given like reference numerals and further explanation thereof will be omitted here.

In Figs. 1 and 2, reference numeral 12 designates upper and lower work roll chocks, which respectively support upper and lower work rolls. The axes of the upper and lower work rolls 11 are disposed so as to cross with each other within a plane in parallel to a sheet surface of the rolled sheet material. Reference numeral 13 designates upper and lower backup roll chocks, which respectively support roll support shafts 1 of upper and lower backup rolls 10 held in circumferential contact with the work rolls 11.

In the case of the illustrated embodiment, the backup rolls 10 also have their axes arranged so as to cross with each other.

The work roll chocks 12 and the backup roll chocks 13 are mounted as fitted slidably in the vertical direction in respective cross-heads 14 embedded slidably in the direction of a line within the both inside portions of a housing 20.

Reference numeral 15 designates hydraulic cylinders, which are fixedly disposed respectively on the both outside portions of the housing 20, and whose rod portions 16 penetrate through the housing 20 and are connected to the respective cross-heads 14.

Reference numeral 17 designates worm wheels respectively fitted and secured to the upper and lower roll support shafts 1, and numeral 18 designates worms rotated by drive units not shown.

The backup roll 10 is, similarly to the heretofore known apparatus shown in Fig. 9, composed of a roll support shaft 1 provided with a central eccentric portion 2, intermediate eccentric portions 3 and opposite end eccentric portions 4

and rotating, outer rings divided into five pieces along the axial direction and respectively rotatably fitted around the respective eccentric portions 2, 3 and 4 via rolling bearings 5, that is, divided rolls 7, 8 and 9, and a sleeve 6 accommodating these respective divided rolls 7, 8 and 9 and rotating jointly with the respective divided rolls 7, 8 and 9 accompanying rotation of the work roll 11. Reference numeral 7 designates a central divided roll, numeral 8 designates intermediate divided rolls, and numeral 9 designates opposite end divided rolls.

Next, description will be made on the operation of the illustrated apparatus.

Upon rolling a material S to be rolled, the upper and lower work rolls 11 disposed with their axes crossed with each other are driven to rotate, and by rotating the roll support shafts 1 of the upper and lower backup rolls 10 via the worms 18 and the worm wheels 17, crown patterns are formed respectively on the upper and lower work rolls 11.

If the V-shaped crown in this crown pattern is insufficient, then the upper and lower work rolls 11 and backup rolls 10 are further turned about their central portion in the axial direction by means of the hydraulic cylinders 15 to make the upper and lower rolls cross with each other, and defective sheet shape such as a sheet crown and complex elongation of the rolled material S is controlled by adjusting this cross angle.

As a modified embodiment of the present invention, a sleeve-roll type backup roll could be disposed only on either one side of the upper and lower sides.

In addition as another preferred embodiment, only the upper and lower work rolls could be made to cross with each other without making the backup rolls cross with each other.

Furthermore, as yet another preferred embodiment, the present invention could be applied to a reversible type rolling mill, in which there are provided a drive unit for normally and reversely rotating the work rolls and reversible traveling equipments in the front and the rear of the mill, and in which rolling is effected by making a rolled sheet material reciprocate through the mill.

The rolling mill according to the present invention has a sheet shape control capability adaptable to every type of defective sheet shape of a rolled material. Accordingly, it is preferable to equip the rolling mill according to the present invention at the place where a rolled material used as a final product is rolled, and more specifically, it is preferable to be equipped in later stages at least including the final stage of a train of reversible rolling mills and cold- or hot-steel belt rolling mills.

By way of example, in the case where a back-up roll having the construction shown in Fig. 9 was employed in a rolling mill according to the present invention, illustrating the crown patterns, they have the varieties shown in Fig. 3. In this figure, the column captioned "eccentric state" corresponds to Fig. 10, but for the sake of simplicity, only the eccentric positions of the centers C_2, C_3 and C_4 of the respective eccentric portions 2, 3 and 4 are shown. Also, meaning of a parenthesized description such as (9 smaller diameter) is indication of the fact that a crown pattern is finely adjusted by selecting the diameters of the opposite end divided rolls 9 smaller than the diameters of the other two kinds (central 7 and intermediate 8) divided rolls. From Fig. 3 it is seen that an arbitrary crown pattern can be formed by appropriately selecting the eccentric state.

Next, in order to clarify a difference in capabilities between the rolling mill according to the present invention provided with a roll-crossing device and having a sleeve-roll type backup roll and the known rolling mill only having a sleeve-roll type backup roll, a controllable range of a sheet crown including a common 4-stage rolling mill was compared in detail through numerical calculation. As shown in Fig. 4, a sheet crown is represented here by the following numerical values.

sheet crown of a sheet width end portion: $C_2 = h_C - h_E$

sheet crown of a quarter portion: $C_4 = h_C - h_Q$

here

h_C: sheet thickness of a sheet width central portion
h_Q: sheet thickness at a quarter point of a sheet width
h_E: sheet thickness at a position 25 mm apart from a sheet end

As conditions for calculation, dimensions of various portions of a rolling mill is shown in Fig. 5 and Table 1.

Table 1

Name \ Type of Rolling Mill	Symbol	Unit	4-stage Rolling Mill	Sleeve Type Backup Roll	Sleeve Type Backup Roll provided with Roll-Crossing Device
Backup Roll Shaft Length	a_B	mm	3400	3400	3400
Backup Roll Drum Length	b_B	mm	2150	2150	2150
Backup Roll Shaft Diameter	d_B	mm	950	750	750
Backup Roll Drum Diameter	D_B	mm	1300	1300	1300
Work Roll Shaft Length	a_W	mm	3400	3400	3400
Work Roll Drum Length	b_W	mm	2200	2200	2200
Work Roll Shaft Diameter	d_W	mm	270	270	270
Work Roll Drum Diameter	D_W	mm	480	480	480
Work Roll Bending ϕ	F_W	tf	±50	±50	±50

Rolling conditions are three standards of sheet widths of 800 mm, 1300 mm and 2000 mm, and a rolling load is 0.8 tf/mm. As a function for crown control, in the conventional 4-stage rolling mill, a cross angle of a cross-roll type rolling mill was set at 1.5 degrees/one side by work roll bending, and a sleeve-roll type backup roll was applied to only either one of the upper and lower backup rolls.

Results of calculation are shown in Fig. 6. The respective rolling mill types are indicated along the abscissa, and three types of rolling mills including a 4-stage rolling mill, a sleeve-roll type backup roll rolling mill and further a sleeve-roll type backup roll rolling mill provided with a roll-crossing device according to the present invention, were compared. A lower half of Fig. 6 shows a controllable range of a sheet crown C_2 in the sheet width end portion, while an upper half of Fig. 6 shows a control amount ΔC_4 of a sheet crown C_4 in the quarter portion. (With regard to the meaning of ΔC_4, description will be made later.) It is seen from this figure that according to the roll-cross method, while a controllable range of the sheet crown C_2 can be greatly broadened, a control amount of the sheet crown C_4 is small, and that on the contrary, a control amount for the sheet crown C_4 by the sleeve-roll type backup roll is large. Accordingly, by employing the rolling mill according to the present invention in which the both types are combined, defective shape of rolled material of every type can be dealt with.

More detailed illustration of the results of calculation in Fig. 6 with respect to the case of a sheet width of 2000 mm, is given in Fig. 7. In Fig. 7, a crown of a sheet at the time of employing various crown control functions is shown taking the sheet crown C_2 in the sheet width end portion along an ordinate and the sheet crown C_4 in the quarter portion along an abscissa. For instance, a rhombus formed by connecting points A, B, C and D represents variation of a sheet crown when a sleeve-roll type backup roll is revolved one turn with a roll cross angle fixed at zero degree. As the cross angle is increased from zero degree, the coordinate point representing a sheet crown moves successively in the left-downward direction, and a sheet crown when the sleeve-roll type back-up roll is revolved one turn with the cross angle fixed at 1.5 degrees is represented by points A', B', C' and D'.

Accordingly, if a crown pattern of a backup roll is fixed, according to roll-crossing a sheet crown moves only on a straight line, for example, connecting the points C and C'.

Whereas, by varying a crown pattern and changing a cross angle by means of sleeve-roll type backup rolls, a sheet crown can take any arbitrary point within a hexagon formed by connecting points A, B, B', D', C', and C. The quarter portion sheet crown control amount ΔC_4 shown in the upper half of Fig. 6 is representation of a width in the direction of

the abscissa of this hexagon.

As described in detail above, in the rolling mill according to the present invention, since a V-shaped crown can be further added to the V-, W-, A- and M-shaped crown patterns formed by the sleeve-roll type backup rolls owing to provision of both a roll-crossing device and sleeve-roll type backup rolls, the respective crown patterns are further diversified, a sheet crown of a rolled material and complex sheet configuration defects such as composite elongations can be simultaneously controlled.

In addition, it becomes possible to sufficiently control a sheet configuration even if the eccentric amounts of the respective divided rolls are not enlarged, and so, lives of the rolling bearings for supporting the respective divided rolls can be elongated.

Claims

1. A rolling mill including a roll-crossing device for making respective axes of upper and lower work rolls (11) and upper and lower backup rolls (10) held in circumferential contact with said work rolls cross with each other within a plane in parallel to a rolled sheet surface;

   characterized in that said upper and/or said lower backup roll (10) is/are constructed as a sleeve-roll type backup roll, in which the backup roll is divided into three or more rolls along its axial direction, said plurality of divided rolls (2, 3, 4) are rotatably mounted as held eccentric on one roll support shaft (1) whose rotary angle is adjustable, and said plurality of divided rolls (2, 3, 4) are all accommodated with one sleeve (6).

2. A rolling mill according to claim 1,
   characterized in that said rolling mill includes drive means for normally and reversely rotating said work rolls (11) and making a rolled metal sheet material reciprocate between said work rolls (11).

3. Use of a rolling mill according to claim 1 or 2 in the final stage of a steel belt rolling mill train.

Patentansprüche

1. Walzwerk mit einer Walzenkreuzungs- oder -schränkvorrichtung, um jeweilige Achsen von oberen und unteren Arbeitswalzen (11) sowie oberen und unteren Stützwalzen (10), die in Umfangsberührung mit den Arbeitswalzen gehalten sind, einander in einer Ebene parallel zu einer ausgewalzten Blechoberfläche kreuzen zu lassen,

   dadurch gekennzeichnet, daß die obere und/oder untere Stützwalze(n) (10) als Mantel(typ)-Stützwalze(n) ausgebildet ist/sind, wobei die Stützwalze in ihrer Axialrichtung in drei oder mehr Walzen unterteilt ist, welche mehreren geteilten Walzen (2, 3, 4) exzentrisch gehalten auf einer Walzenstützwelle (1), deren Drehwinkel verstellbar ist, drehbar gelagert sind, und die mehreren geteilten Walzen (2, 3, 4) sämtlich in einem Mantel (6) untergebracht sind.

2. Walzwerk nach Anspruch 1,

   dadurch gekennzeichnet, daß das Walzwerk Antriebseinrichtungen zum Drehen der Arbeitswalzen (11) in der Normal- und der Gegenrichtung, und um ein ausgewalztes Metallblechwerkstück zwischen den Arbeitswalzen (11) hin und her laufen zu lassen, aufweist.

3. Verwendung eines Walzwerks nach Anspruch 1 oder 2 in der Endstufe einer Stahlbandauswalz-Walzwerksstraße.

Revendications

1. Laminoir comprenant un dispositif de croisement des cylindres pour permettre le maintien des axes respectifs des cylindres de travail supérieur et inférieur (11) et des cylindres d'appui supérieur et inférieur (10) dans un contact circonférentiel avec lesdits cylindres de travail s'entrecroisant dans un plan parallèlement à une surface de plaque laminée ;
   caractérisé en ce que ledit cylindre d'appui supérieur et/ou ledit cylindre d'appui inférieur (10) est/sont construit(s) comme un cylindre d'appui du type composite, dans lequel le cylindre d'appui est divisé en trois cylindres ou plus le long de son sens axial, ladite pluralité de cylindres divisés (2, 3, 4) sont montés de manière à pouvoir tourner en étant maintenus de façon excentrique sur un arbre d'appui de cylindres (1) dont l'angle rotatif est ajustable, et ladite pluralité de cylindres divisés (2, 3, 4) sont tous logés avec un manchon (6).

2. Laminoir selon la revendication 1, caractérisé en ce que ledit laminoir comprend des moyens d'entraînement pour mettre en rotation normalement et en sens inverse lesdits cylindres de travail (11) et permettre à une matière de

plaque de métal laminée d'aller et venir entre lesdits cylindres de travail (11).

3. Utilisation d'un laminoir selon les revendications 1 ou 2 à l'étape finale d'un train de laminoir d'une bande transporteuse en acier.

FIG. 1

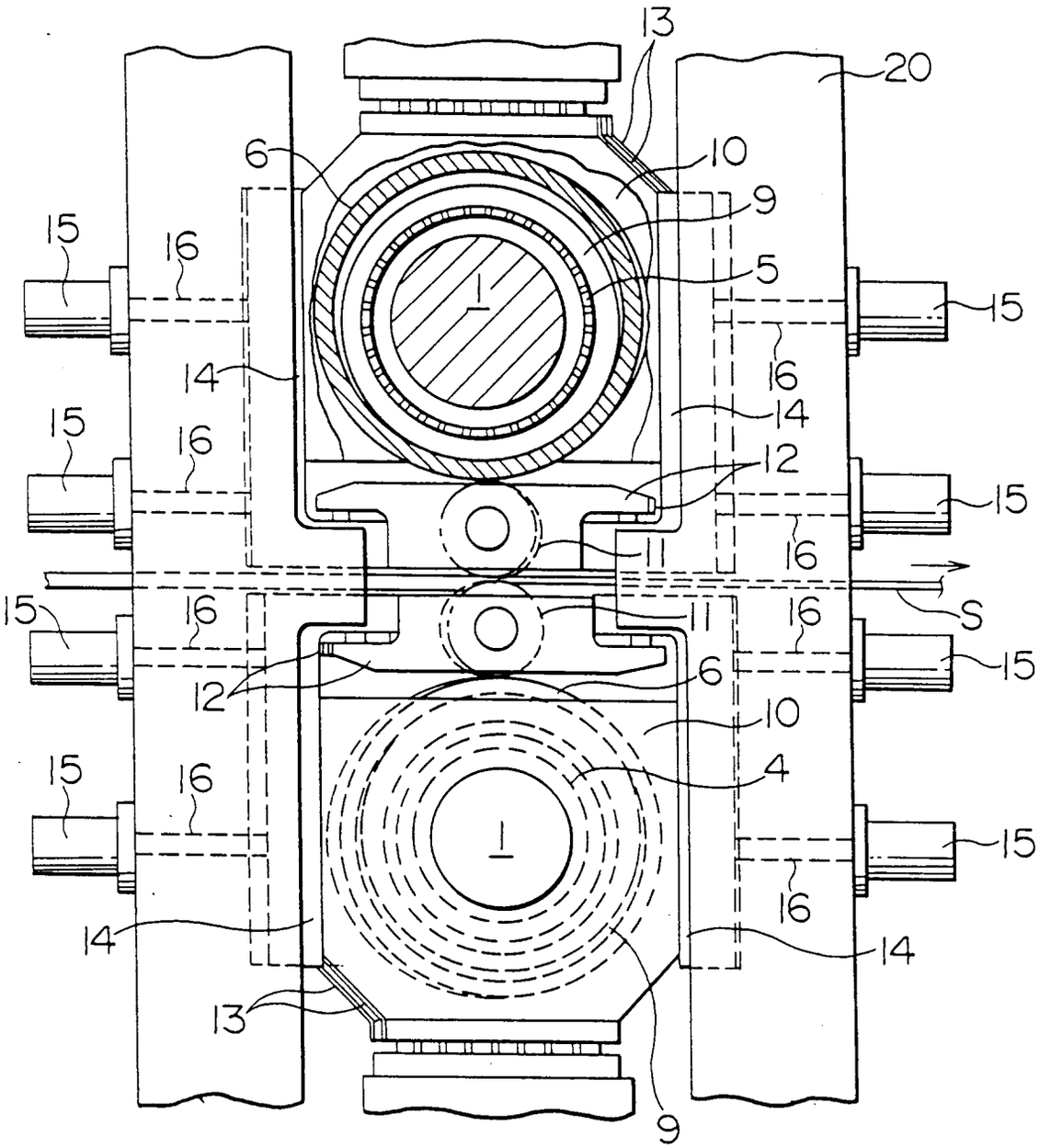
13
20
6
10
9
15
16
5
1
15
14
16
14
15
16
12
12
15
16
11
16
S
15
16
11
16
12
6
15
10
15
16
4
1
15
16
14
14
13
9

FIG. 2

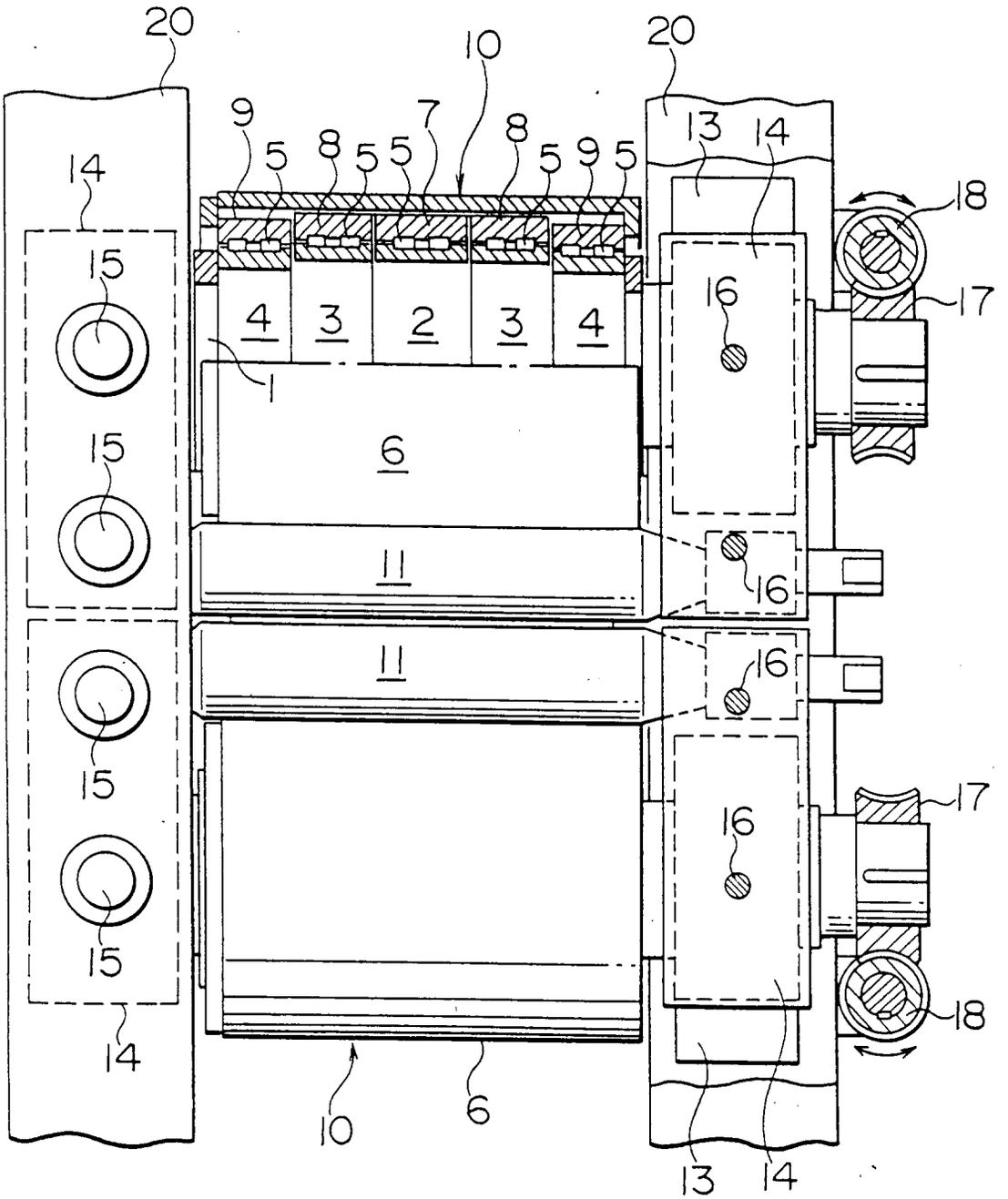
20
10
20
9
7
8
13
14
14
5
8
5
5
8
5
9
5
18
15
16
17
4
3
2
3
4
1
6
15
11
16
11
16
15
17
16
15
18
14
10
6
13
14

Other Examples of Crown Pattern

FIG. 3

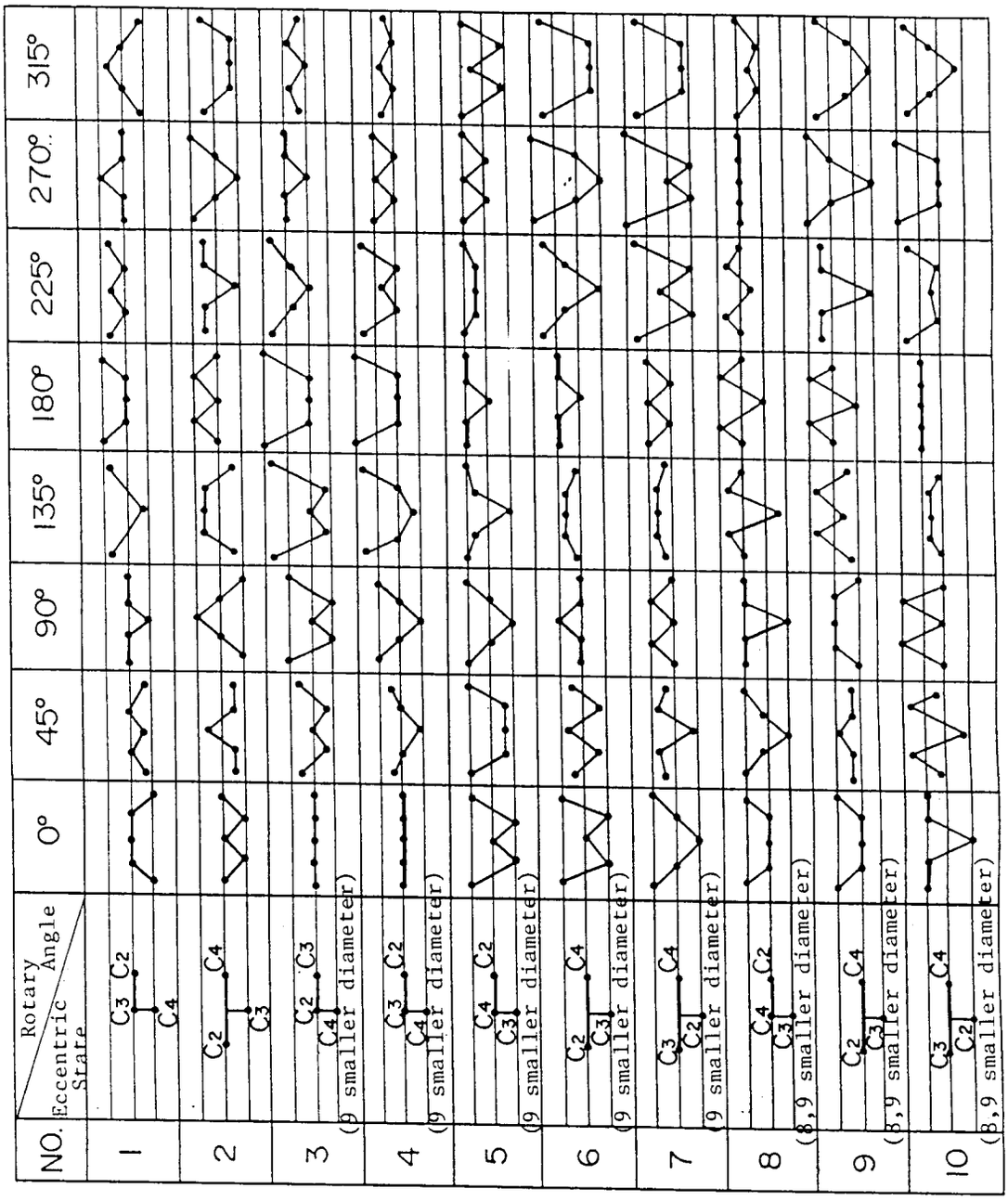

FIG. 4

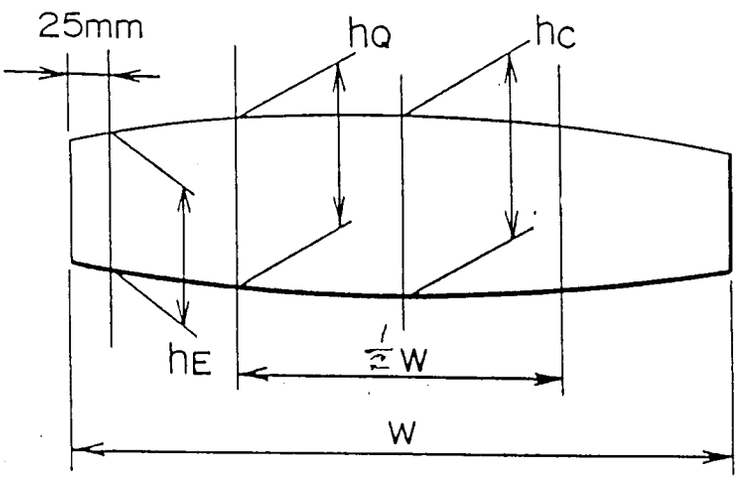

FIG. 5

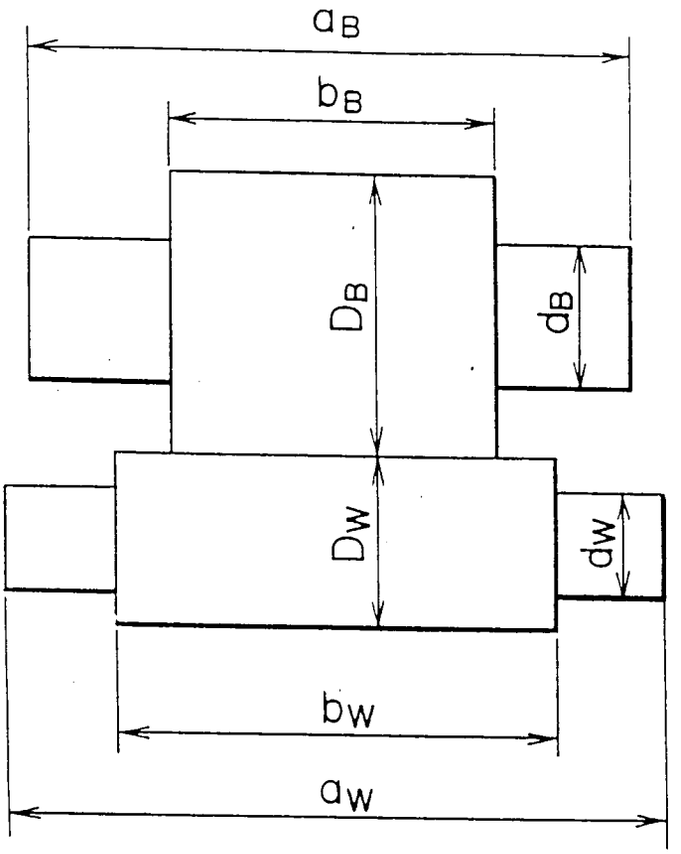

FIG. 6

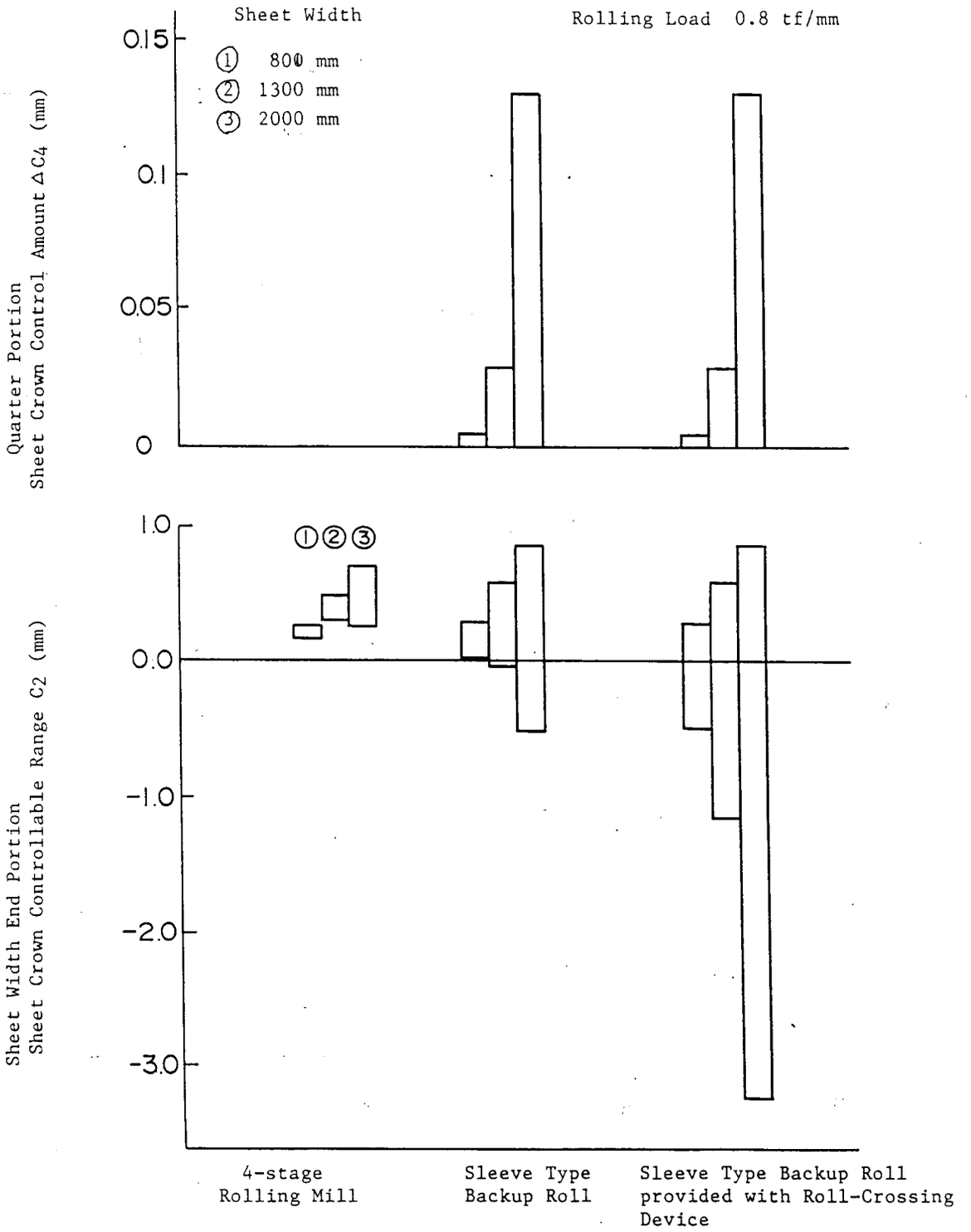
Sheet Width
Rolling Load 0.8 tf/mm
① 800 mm
② 1300 mm
③ 2000 mm
Quarter Portion
Sheet Crown Control Amount ΔC4 (mm)
0.15
0.1
0.05
0
Sheet Width End Portion
Sheet Crown Controllable Range C2 (mm)
1.0
0.0
-1.0
-2.0
-3.0
①②③
4-stage Rolling Mill
Sleeve Type Backup Roll
Sleeve Type Backup Roll provided with Roll-Crossing Device

FIG. 7

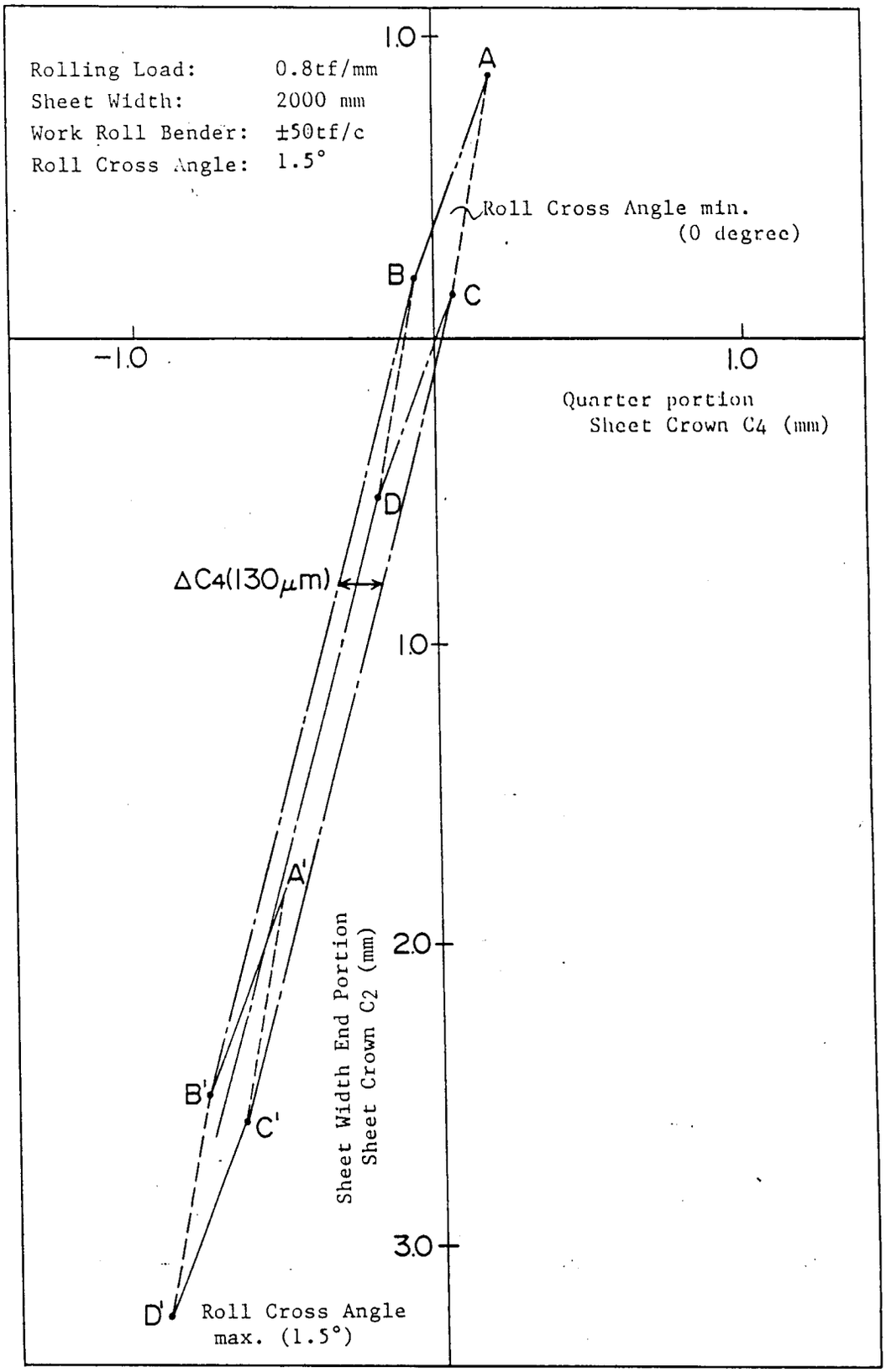

Sheet Crown Controll Characteristics by
Roll Cross Type Rolling Mill and Sleeve Type Backup Roll

FIG. 8

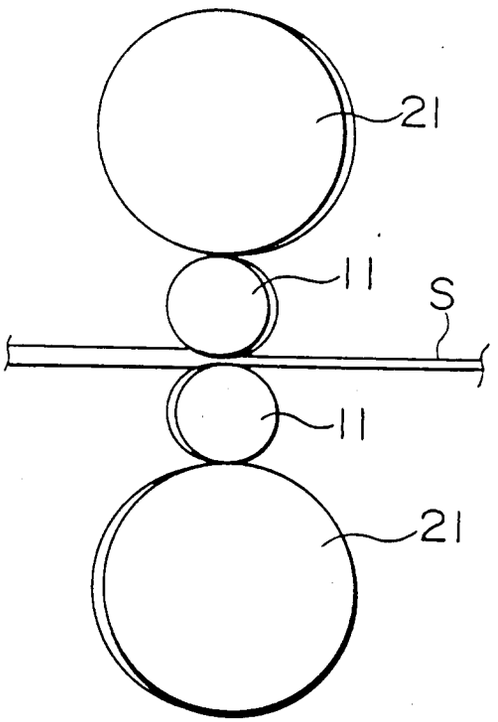

FIG. 9

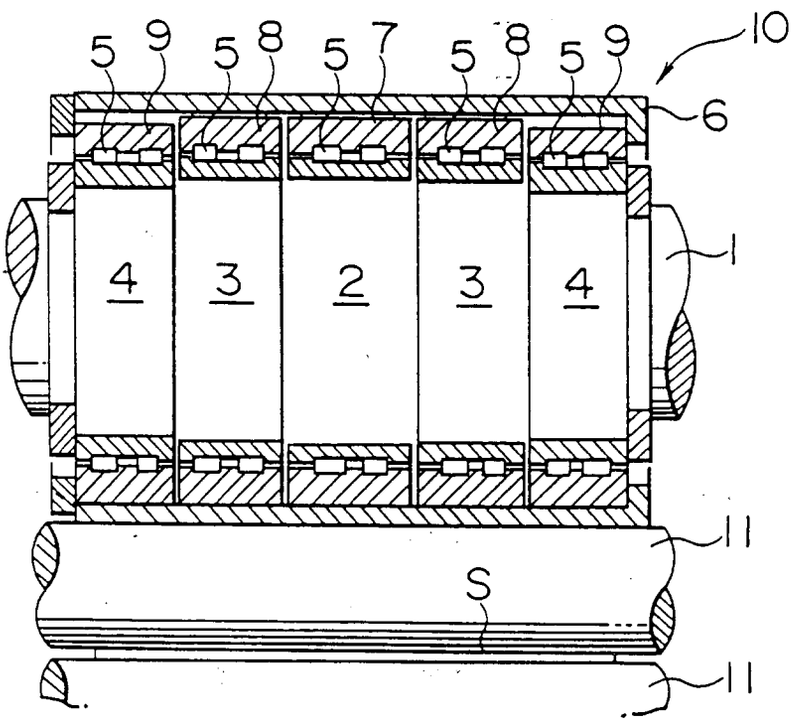

FIG. 10

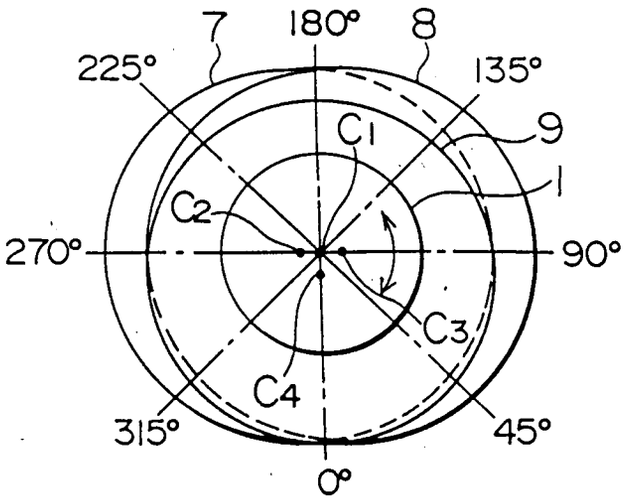

FIG. 11

Rotary Angles	Crown Patterns
0°	9 8 7 8 9
45°	
90°	
135°	
180°	
225°	
270°	
315°	