(19) Europäisches Patentamt
European Patent Office
Office européen des brevets

(11) Publication number: **0 667 300 A1**

(12) EUROPEAN PATENT APPLICATION

(21) Application number: **94200357.5**

(51) Int. Cl.[6]: **B65D 41/26**, B65D 1/02

(22) Date of filing: **10.02.94**

Amended claims in accordance with Rule 86 (2) EPC.

(43) Date of publication of application:
16.08.95 Bulletin 95/33

(84) Designated Contracting States:
AT BE CH DE DK ES FR GB GR IE IT LI LU NL PT SE

(71) Applicant: **THE PROCTER & GAMBLE COMPANY**
One Procter & Gamble Plaza
Cincinnati,
Ohio 45202 (US)

(72) Inventor: **Jacobs, André M.G.**
Waversebaan 50
B-1982 Zemst (BE)

(74) Representative: **Engisch, Gautier et al**
Procter & Gamble
European Technical Center N.V.
Temselaan 100
B-1853 Strombeek-Bever (BE)

(54) Package with a lightweighted closure system.

(57) The present invention relates to a dosing cap (20), which is a measuring cup adapted to serve as a liquid tight closure. Said dosing cap is lightweighted, in the sense that it presents a wall with two different thicknesses. The thinner walled part (26) is inserted into the neck (12) of the container (10) to achieve the necessary closure. The thicker walled rest (28) of said dosing cap remains outside and serves as a gripping means to open the corresponding container.

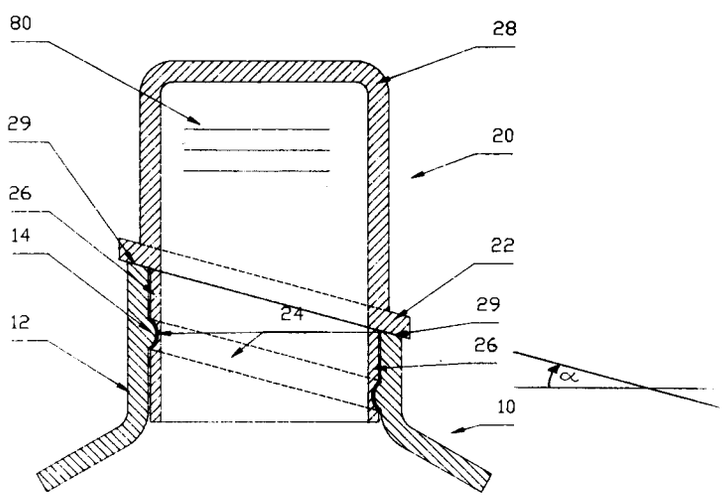

FIG. 2

EP 0 667 300 A1

Field of the invention

The present invention relates to a package comprising a container and a measuring cup adapted to serve as a closure. The improvement of the present invention achieves a consistent saving in the manufacturing material, maintaining all the common characteristics of similar packaging, such as, for example, a liquid tight seal and self draining properties.

Background of the invention

Packages comprising a container and dosing cap are well known in the prior art. The container is able to contain liquid or granular substances. The dosing cap is a measuring cup adapted also to serve as a closing system. With the help of said dosing cap a certain contained substance is dosed and the container is closed in a detachable manner. Lightweighted packages are desirable, because of the low weight and reduced cost in materials required for their manufacture and the reduced cost related to the disposal. It is an object of the present invention to propose a package which achieves a consistent material saving in the manufacture of said package.

A problem associated with these packages is the spillage from said dosing cap onto the container, when it is applied again after use on the container, which can cause contamination of the closure systems, such as threads, with the contained product, as well as dripping along the container, making the closure and container messy, very slippery and thus difficult to handle.

To solve this problem various solution have been proposed. EP-B-0 369 560 describes an assembly, in which the measuring cup, threaded on the outside of said neck of the container, presents a skirt extending into the pouring spout body, which protects the threads of said measuring cup. A further improvement has been achieved with EP-A-0 417 954 in which the drain back trough is part of the container's body. Said trough has to be formed through an inversion of part of the neck of the container after the blow-molding process.

Other solutions are disclosed in US-4 696 416 and US-4 981 239. The dosing cap has a fastening means formed on its external surface, adapted to be sealed tightly to the interior surface of a collar secured to the orifice of the container. This means that no extra skirt is needed in this case to protect the threads of said dosing cap, although an intermediate piece, which joins the container and the dosing cap, is still required.

In all the previous solutions no limitations on the amount of the packaging material required has been set. On the contrary, more packaging material has been added to solve spillage problems through specific back draining means. The present invention reduces the necessary packaging material by inserting the dosing cap inside the neck of the container directly, as will be described further on.

In order to save material for the manufacturing of a package, which needs to be dosed, such as liquid and/or granular detergent, softeners, bleaches and the like, it would be more desirable that said package is comprised only of two parts : a container and a dosing cap, but no transition piece to convey the back drain. In particular, it would be more desirable for the same reason to avoid the forming of a back drain trough on the neck of the container.

We have now found that these objects are met by partly inserting the dosing cap into the neck of the container. This inserted part, protected by the neck of the container, needs not to be of the same resistance compared to the rest not inserted into said neck. Nevertheless, minimum constraints have to be taken into account, in order to determine the effective material saving.

The amount of packaging material or weight of the dosing cap is primarily determined by the mass density of the manufacturing material and the thickness of the wall of said dosing cap. The thickness determines the final resistance and stability properties of said cap. The resistance and the stability are important features of a reusable dosing cap, since it has to be gripped many times in order to open the container, especially considering that most of the commercially available containers are refillable.

Brief description of the figures

Figure 1 is a fragmentary side view of the preferred embodiment of the present invention.

Figure 2 is a fragmentary cross-sectional view of the embodiment of Figure 1 taken along line 5-5.

Figures 3 to 9 are fragmentary cross-sectional views of other embodiments of the present invention.

Summary of the invention

The present invention is a package comprising a container and a dosing cap, said cap comprising a top and a circumferential wall. The wall of said cap has two different thicknesses, the thinner walled part of said cap fitting into the neck of said container, to achieve a liquid tight seal.

Detailed description of the invention

Figure 1 illustrates the top end of the closed package in the preferred embodiment of the

present invention, suitable for holding liquid or granular substances and the like. Preferably the container (10) is provided with a handle (not shown), integrally molded therewith, to provide a gripping means to facilitate holding and carrying the container (10) and dispensing its contents. The container (10) has a removably attached closure (20) to prevent in adverted spillage or loss of freshness of the contents of the container (10). The closure (20) may also be used as a measuring cup, to ensure the desired quantity of liquids is dispensed. The closure (20) is attached directly into the neck (12) of the container (10) in a liquid tight manner.

Figure 2 is a cross sectional view of Figure 1 along the line 5-5, showing the different thicknesses of the circumferential wall of said dosing cap (20) . The thickness of said wall is defined to be the minimal distance between the inner and the outer surface of the wall. The thinner walled part (26) begins right under the external ridge (22). Said thinner part (26) fits into the neck (12) of container (10) in its closed position. Since said thinner part (26) of cap (20) is entirely protected by the neck (12) of container (10), said part (26) can be of a minor resistance and stability than the rest of the dosing cap (20). Since only a minor resistance and stability conditions are necessary, as explained before, part (26) can be thinner walled than the rest.

The thicker walled part (28) begins from the external ridge (22) upwards. This part (28) of said dosing cap (20) remains outside the neck (12). This part (28) needs to maintain a certain stability and resistance, since said part (28) has to be gripped firmly, in order to disconnect said dosing cap (20) from the neck (12) of container (10). This operation has to be accomplished many times.

The spillage free feature of the package of the present invention is another advantage, which is a direct consequence of the partial insertion of the dosing cap (20) into the neck (12) of container (10). It is evident that the rest of the dosed substance flows or falls automatically back into the container. This leads to the unnecessity of any drain back trough or other feature to convey the rest of any dosed substance back into the container. Not needing any particular drain back facility, as said before, also diminishes the amount of packaging material necessary for the package. This results in a significant material saving versus the packages of the prior art.

The dosing cap (20) may have two inclined features : the external ridge (22) and the groove (24). The groove (24) on the outer surface of part (26) of the dosing cap (20) fits exactly onto the identically sloped internal ridge (14). This internal ridge (14) is made on the inner surface of the neck (12) of container (10) and it has the identical shape of the groove (24), in order to get a liquid tight seal.

As shown in Figure 3, the dosing cap (30) can also have two external ridges (22) and (32). The ridge (32) fits now into the groove (34) on the inner surface of the neck (12). The number and the shape of grooves (24) or ridges (32) and the corresponding internal ridges (14) and grooves (34) can be varied by any person skilled in the art.

The neck (12) of the container (10) not only contributes to the closure system, but it also serves as the pouring spout of the container of the present invention.

Referring again to Figure 2, the fitting of the cap (20) into the neck (12) is only possible, if the lip (29) of the neck (12) is identically inclined as the external ridge (22) of cap (20). The inclination is defined by an angle α. This angle a is measured from the plane defined by the supporting basis of the container (10) in its upright position to a line parallel to the lip of the neck (12) or external ridge (22). Therefore the angle α has to be always equal for both the external ridge (22) and the lip (29) of neck (12), in order to obtain a liquid tight seal.

Figure 4 schematically shows certain features which further improves the liquid tightness applicable to all embodiments. The new feature in respect to Figure 2 is the ridge (8) between the neck (12) and collar (9) of the container (10). Said ridge (8) forms all around inside the neck (12) an area (7). Said area (7) is sloped in Figure 4, but it can also be flat. Correspondingly, the lip (27) of the dosing cap (90) has the same slope as the area (7). The lip (27) of the dosing cap (90) coming in direct contact with area (7) assures an improved liquid tightness of dosing cap (90).

The inclined versions described so far are the preferred embodiments of the present invention, since said inclination of the lip (29) of neck (12) helps in separating the cap (20) from the container (10). In this manner, the cap (20) can be turned in respect to the neck (12); a 1/4 turn at most is sufficient to force the ridge and the groove to disengage. Furthermore, the inclination of the lip (29) of neck (12) facilitates the use as a pouring spout of neck (12) to dose the contained substance out of the container into the dosing cap (20).

Nevertheless, other versions are possible with the same characteristical features between dosing cap (20;30) and neck (12) described above, which form the closure system, but with different angles between each other. One possibility is to have the external ridge (22) and the lip (29) of neck (12) inclined with an angle α, whereas the groove (24) and the corresponding internal ridge (14) with another completely different angle β, as illustrated in Figure 5. Angle β is measured from the plane defined by the supporting basis of container (10) in

its upright position to a line parallel to groove (24) or internal ridge (14). This includes also the following possibilities for the angles :

a) $\alpha = 0, \beta \neq 0$;

b) $\alpha \neq 0, \beta = 0$;

c) $\alpha = \beta = 0$.

The possibility schematically described by the item a) is illustrated in Figure 6. The external ridge (22) on the dosing cap (50) and the lip (29) of neck (12) have no inclination, on the contrary to groove (24) and internal ridge (14). The latter inclination is defined by β. The possibility b) is shown in Figure 7, representing the exact opposite of case a) : no inclination of groove (24) and internal ridge (14), an inclination defined by a for external ridge (22) and the lip (29) of neck (12). The possibility described by c) is a complete non-inclined version of the present invention and it is shown in Figure 8.

Another embodiment of the present invention is shown in Figure 9. It is similar to Figure 2 with the only difference that the lip (27) of the dosing cap (80) is also inclined with an angle γ. This angle γ is measured from the plane defined by the supporting basis of the container (10) in its upright position to a line parallel to the lip of the dosing cap (80) The inclination of lip (27) helps the pouring out of the dosed substance. In all the Figures described above, the different thickness of the circumferential wall of the dosing cap is schematically illustrated.

The thickness of the walls of the dosing cap of the present invention may be up to 1.2 mm, preferably up to 0.6 mm, and most preferably from 0.1 mm to 0.3 mm especially for the thinner walled part of said cap. All the angles α, β and γ have values, which can be chosen by any person skilled in the art for any necessary specific requirement. Preferably said values are from 0 radians to $5\pi/12$ radians, more preferably from $\pi/12$ radians to $\pi/3$ radians.

All embodiments described are preferably made of plastic, whereas the container is preferably blow-molded and the dosing cap injected. Nevertheless, as said before, the closure system itself does not limit the use of other commercially available manufacturing materials. The type of plastics usable for this type of application are generally thermoplastics, such as PolyEthylene (PE), PolyEthylene Terephthalate (PET), PolyPropylene (PP), PolyVinyl Chloride (PVC), and any other, less common polymers, like PolyStyrene, PolyCarbonate and Ploymethane. These type of plastics is completely recyclable. It is possible to have material savings up to 80 % compared to current self draining caps.

All the dosing caps shown in Figures 1 to 9 present on their outer and/or inner surface of the wall of said caps dosing lines (80). Said lines (80) help to dose precisely the contained substance out of the container (10). These lines (80) can be easily varied in number, depending from the specific uses of the contained substances.

The pouring spout of the container and the lip of said dosing cap for all embodiments are made anti-drip in order to avoid unnecessary product spillage. Furthermore, a pilfer proof ring, tape, shrink sleeve or the like to avoid cap loosening during transportation and distribution can be added.

The possible contained substances are all those ones, which need to be dosed for a specific use. For example, this happens very often in the laundry and household products, such as liquid or granular detergents, liquid softeners, household cleaners and bleaches.

Claims

1. A package comprising a container and a dosing cap characterized in that said dosing cap partly fits directly into the neck (12) of said container, to achieve a liquid tight seal without transition piece.

2. A package comprising a container and a dosing cap characterized in that said wall has two different thicknesses, the thinner walled part (26) of said cap fitting into the neck (12) of said container.

3. A package according to Claim 1 characterized in that said cap comprises an external ridge (22), which comes in tight contact with the lip (29) of the neck (12) of said container in closed position, and which is situated on the outer surface of said cap separating the two different thicknesses of said wall.

4. A package according to the preceding Claims characterized in that said cap (20;30) comprises grooves (24) and/or ridges (32) on the outer surface of the thinner walled part (26) of said cap (20;30) tightly fitting identically shaped internal ridges (14) and/or grooves (34) on the inner surface of the neck (12) of said container to consent a liquid tight closure of said container with said cap (20;30).

5. A package according to Claim 3 characterized in that said external ridge (22) of said cap (20;30) and the lip (29) of the neck (12) of said container are inclined with an angle α.

6. A package according to Claim 3 and 4 characterized in that said external grooves (24) or ridges (32) on the outer surface of the thinner walled part (26) of said cap (20;30) and the correspondent internal ridges (14) or grooves

(34) on the inner surface of the neck (12) of said container are inclined with an angle β.

7. A package according to Claim 5 characterized in that angle β is equal to angle α.

8. A package according to any of the preceding Claims characterized in that the lip (27) of the dosing cap (100) is inclined with an angle γ.

9. A package according to any of the preceding claims characterized in that the liquid tightness is improved by another ridge (8), said ridge forming an area (7), said area coming in direct contact with lip (27) of dosing cap (20).

10. A package according to any of the preceding Claims characterized in that the lip of said dosing cap and the lip of the neck (12) of said container, serving both as a pouring spouts, are anti-drip.

11. A package according to any of the preceding Claims characterized in that the outer surface of the wall of said cap comprises a securing system, such as a pilfer proof system, tape, shrink sleeve or the like to avoid loosening of said cap during transportation and distribution of said package.

12. A package according to any of the preceding Claims characterized in that said cap comprises dosing lines (80) on the the outer and/or inner surface of the wall of said cap.

Amended claims in accordance with Rule 86-(2) EPC.

1. A package comprising a container and a dosing cap characterized in that said dosing cap partly fits directly into the neck (12) of said container, to achieve a liquid tight seal without transition piece.

2. A package according to claim 1 characterized in that said wall has two different thicknesses, the thinner walled part (26) of said cap fitting into the neck (12) of said container.

3. A package according to any of the preceding claims characterized in that said cap comprises an external ridge (22), which comes in tight contact with the lip (29) of the neck (12) of said container in closed position, and which is situated on the outer surface of said cap separating the two different thicknesses of said wall.

4. A package according to any of the preceding claims characterized in that said cap (20;30) comprises grooves (24) and/or ridges (32) on the outer surface of the thinner walled part (26) of said cap (20;30) tightly fitting identically shaped internal ridges (14) and/or grooves (34) on the inner surface of the neck (12) of said container to consent a liquid tight closure of said container with said cap (20;30).

5. A package according to claim 4 characterized in that said external ridge (22) of said cap (20;30) and the lip (29) of the neck (12) of said container are inclined with an angle α.

6. A package according to claims 4 and 5 characterized in that said external grooves (24) or ridges (32) on the outer surface of the thinner walled part (26) of said cap (20;30) and the correspondent internal ridges (14) or grooves (34) on the inner surface of the neck (12) of said container are inclined with an angle β.

7. A package according to claim 6 characterized in that angle β is equal to angle α.

8. A package according to any of the preceding claims characterized in that the lip (27) of the dosing cap (100) is inclined with an angle γ.

9. A package according to any of the preceding claims characterized in that the liquid tightness is improved by another ridge (8), said ridge forming an area (7), said area coming in direct contact with lip (27) of dosing cap (20).

10. A package according to any of the preceding claims characterized in that the lip of said dosing cap and the lip of the neck (12) of said container, serving both as a pouring spouts, are anti-drip.

11. A package according to any of the preceding claims characterized in that the outer surface of the wall of said cap comprises a securing system, such as a pilferproof system, tape, shrink sleeve or the like to avoid loosening of said cap during transportation and distribution of said package.

12. A package according to any of the preceding claims characterized in that said cap comprises dosing lines (80) on the the outer and/or inner surface of the wall of said cap.

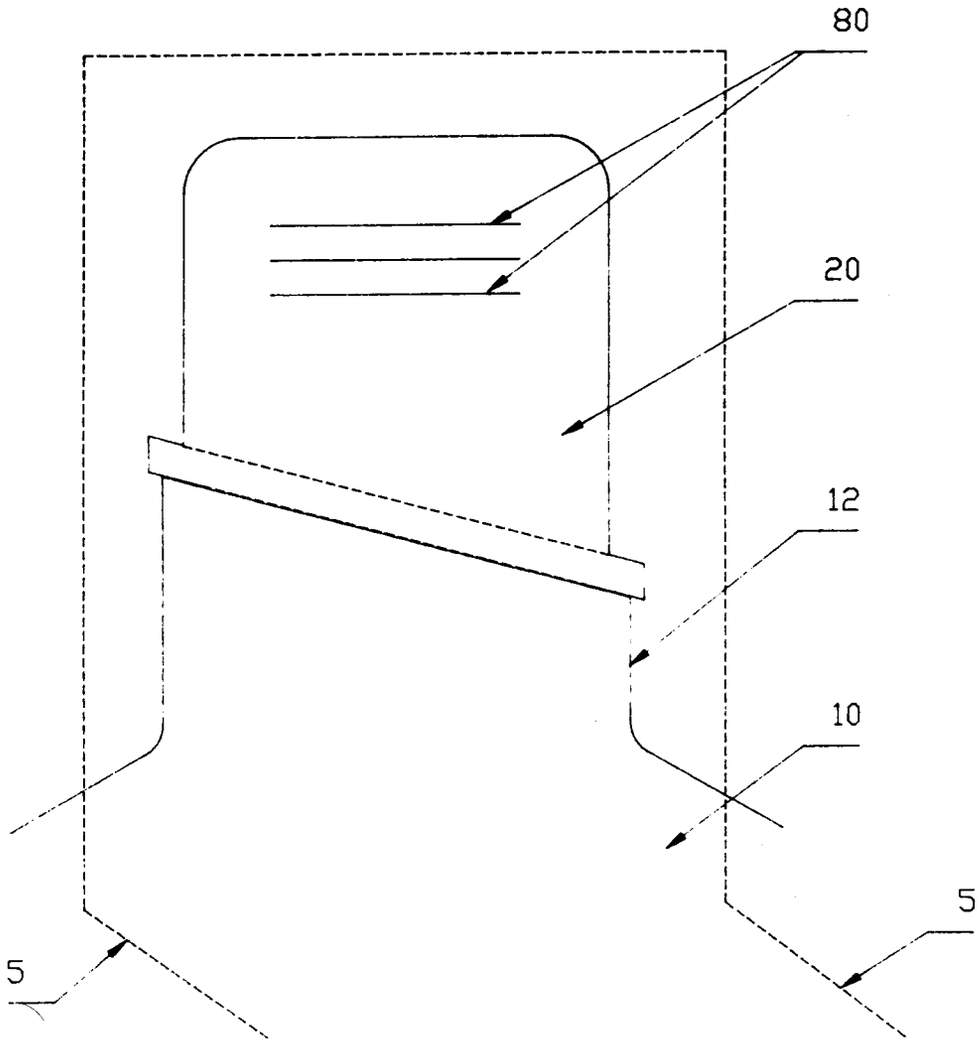

FIG. 1

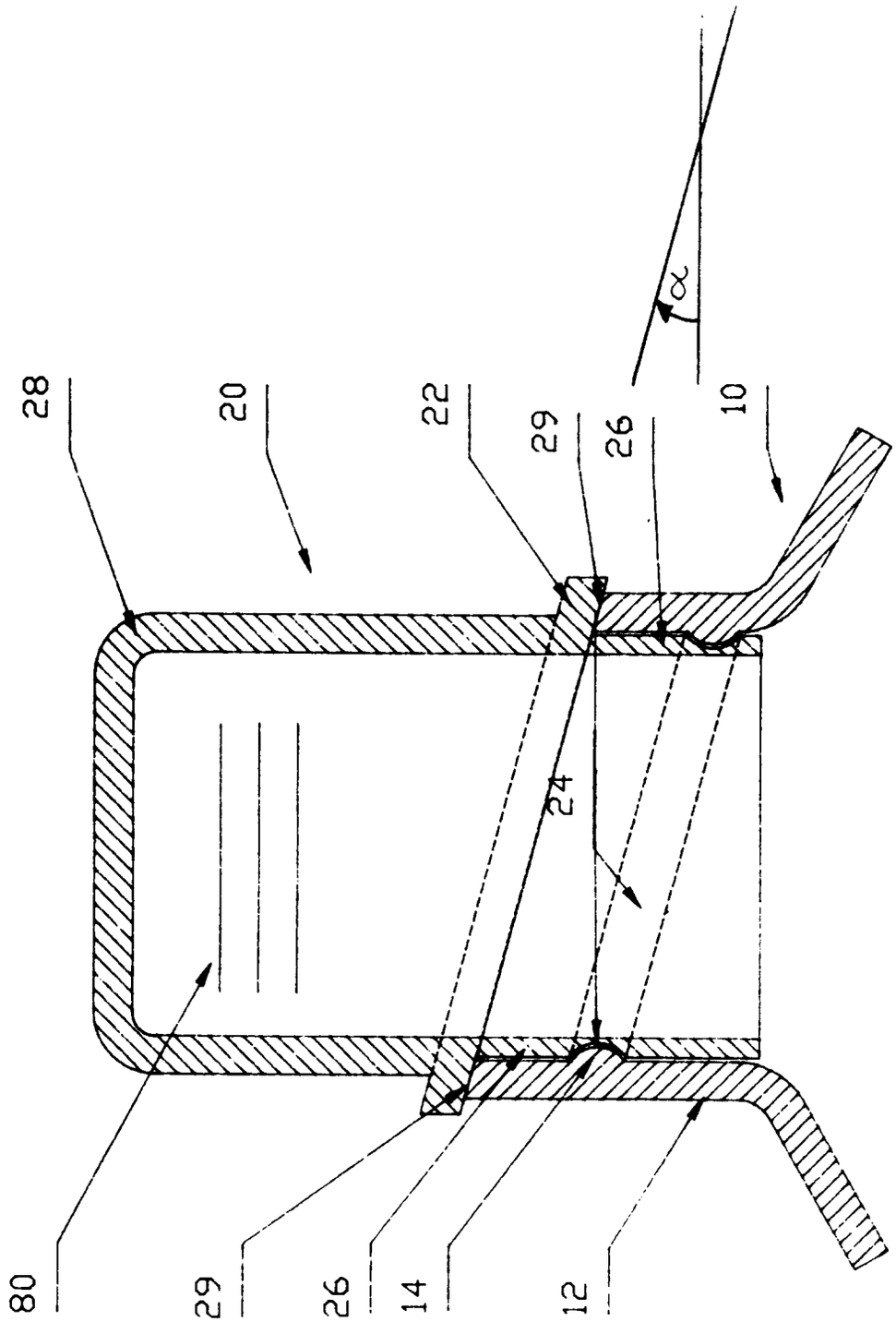

FIG. 2

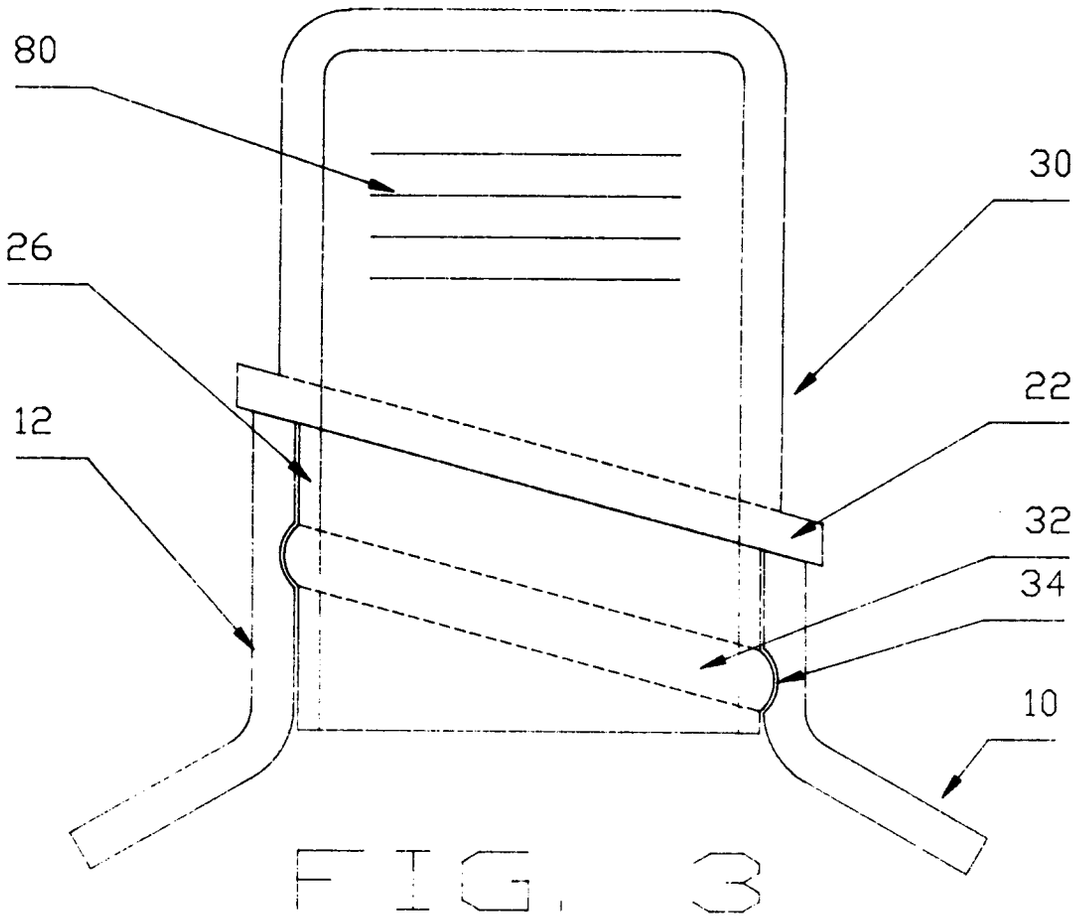

FIG. 3

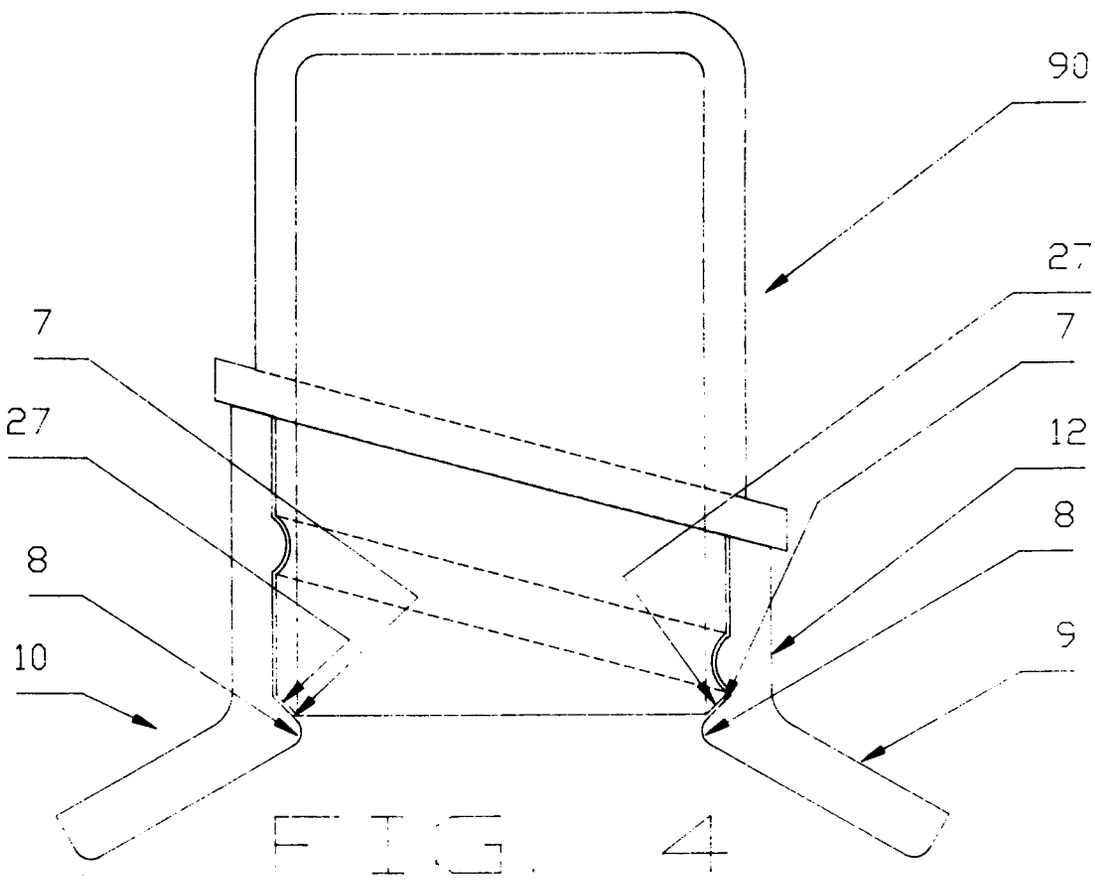

FIG. 4

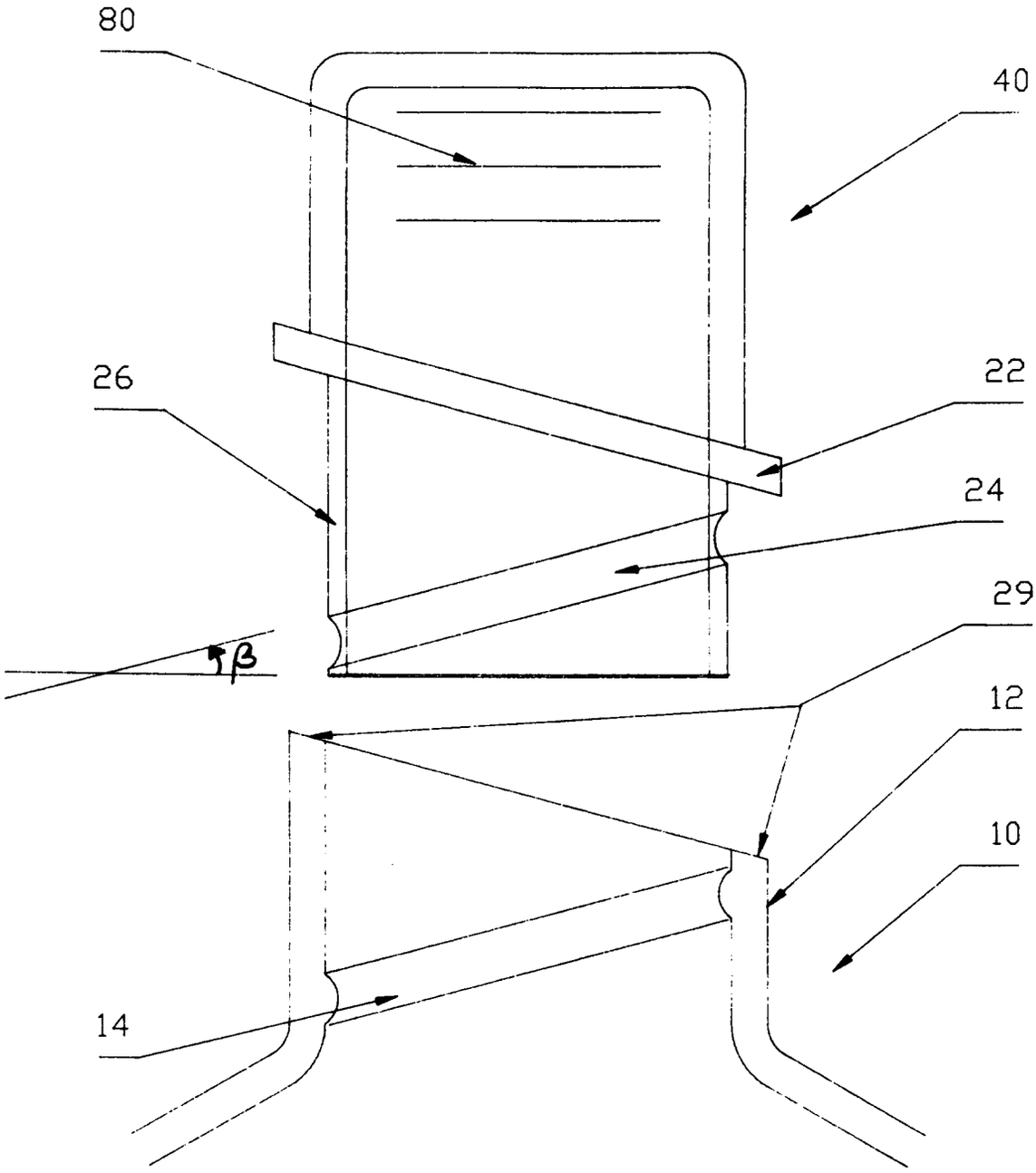

FIG. 5

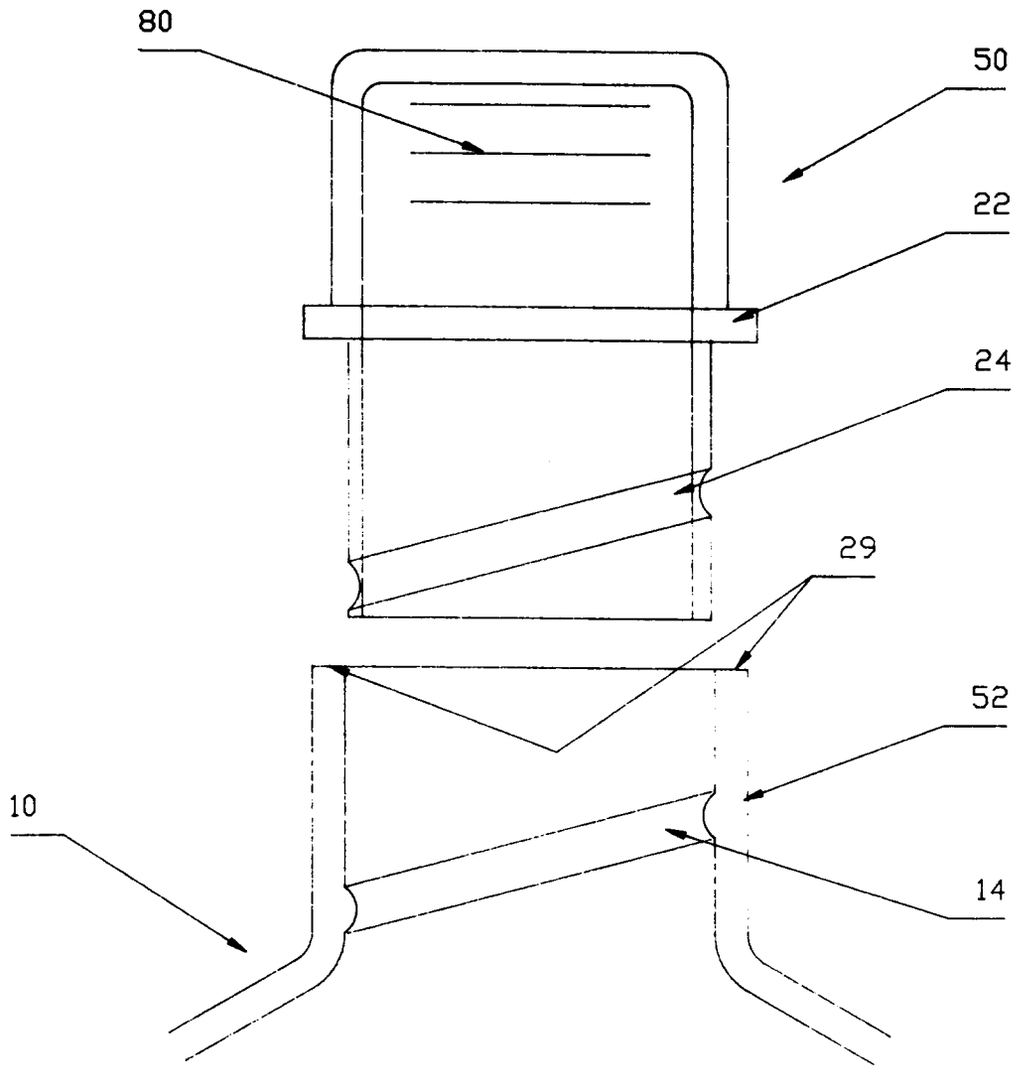

FIG. 6

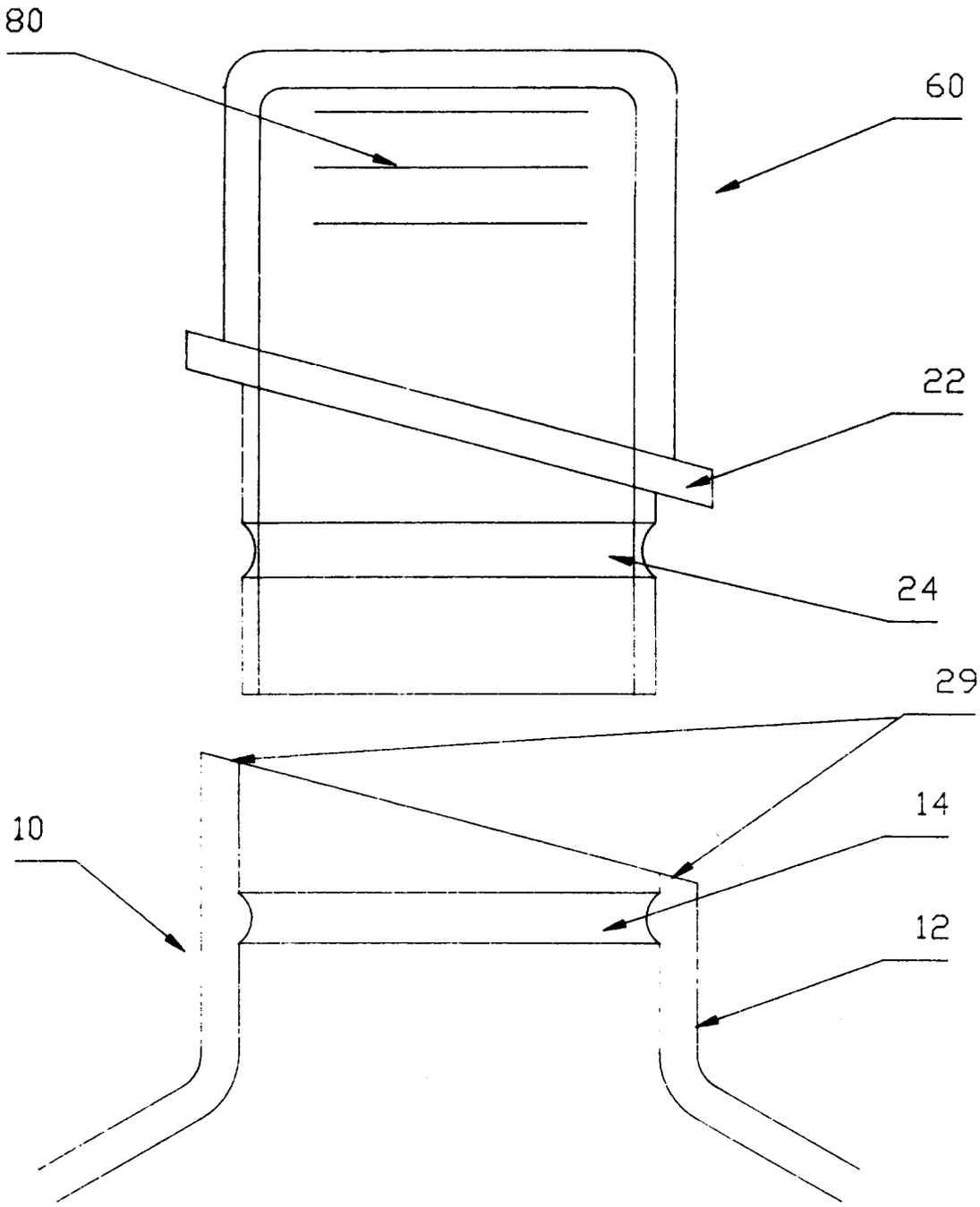

FIG. 7

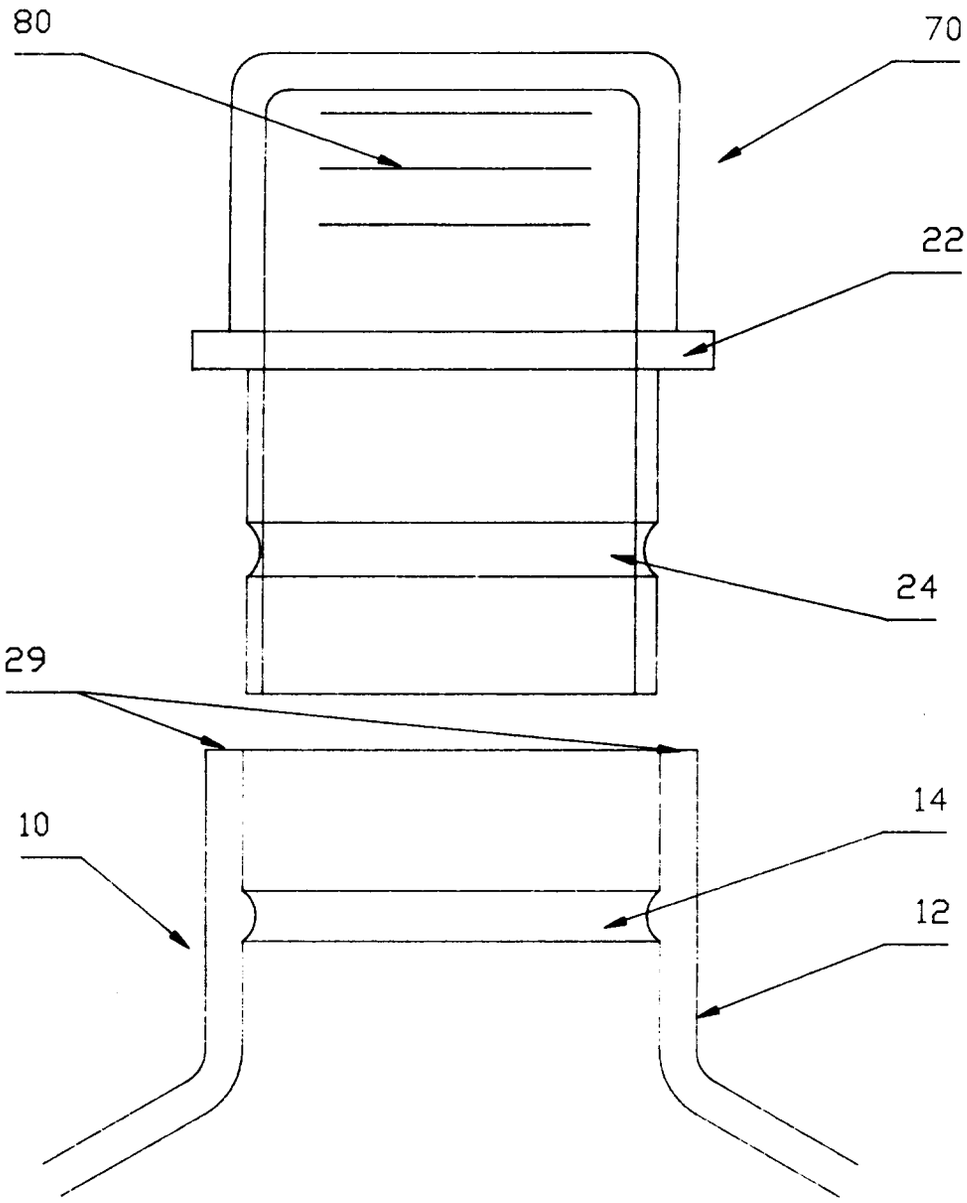

FIG. 8

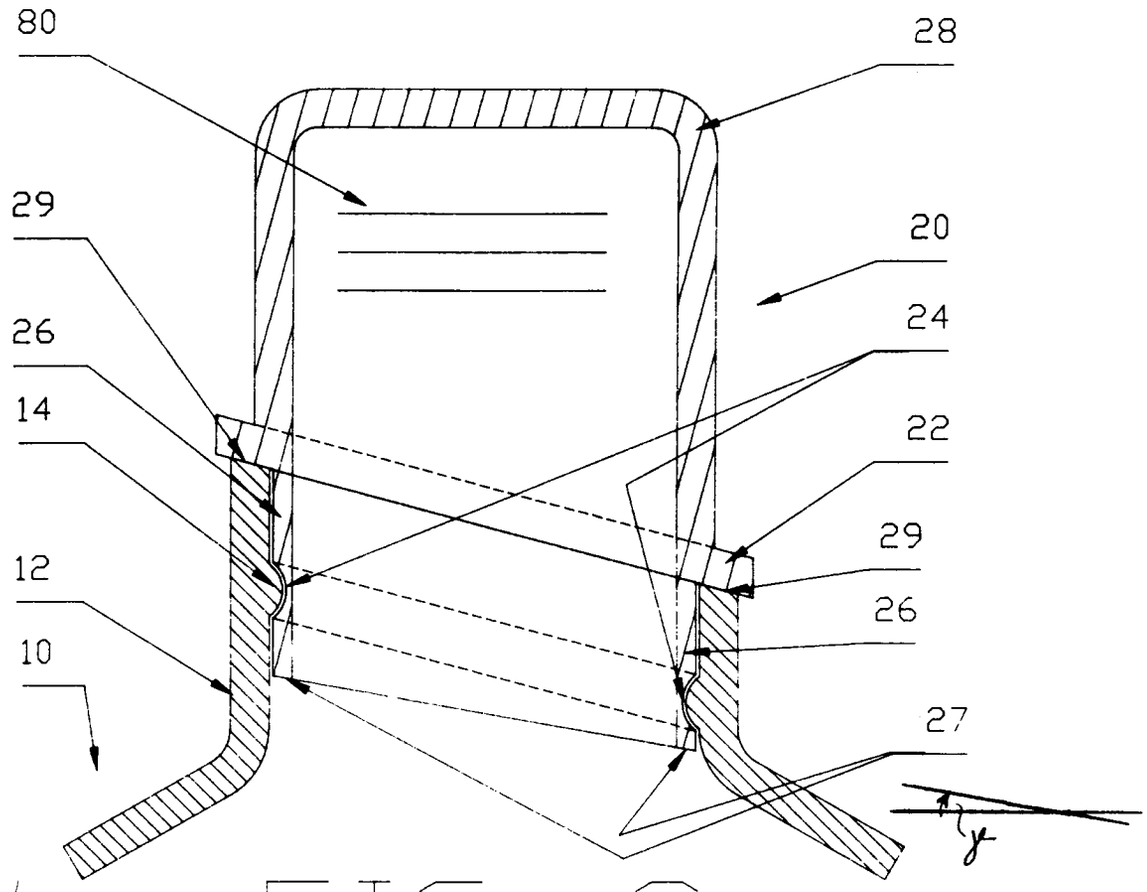

FIG. 5

European Patent Office

EUROPEAN SEARCH REPORT

Application Number
EP 94 20 0357

DOCUMENTS CONSIDERED TO BE RELEVANT

Category	Citation of document with indication, where appropriate, of relevant passages	Relevant to claim	CLASSIFICATION OF THE APPLICATION (Int.Cl.6)
X	WO-A-83 03085 (HENKEL) * claim 2; figure *	1-3	B65D41/26 B65D1/02
Y	---	4-6,9,11	
X	US-A-4 566 508 (BOWYER) * figures 1,4,8 *	1-3,8, 10,12	

Y	EP-A-0 486 162 (OWENS-ILLINOIS) * column 2, line 8 - line 12; figure 2 *	4,6,11	
A	---	10	
Y	US-A-1 773 291 (WEAVER) * figure 7 *	5	

Y	EP-A-0 447 091 (KRAFT GENERAL FOODS) * column 7, line 42 - column 8, line 2; figure 2 *	9	

A	FR-A-1 508 355 (BAUMANN) * the whole document *	4,6	
	---		TECHNICAL FIELDS SEARCHED (Int.Cl.6)
A	FR-A-2 138 741 (BEECHAM) * figure 13 *	7	B65D

The present search report has been drawn up for all claims

Place of search	Date of completion of the search	Examiner
THE HAGUE	29 June 1994	Bridault, A

CATEGORY OF CITED DOCUMENTS

X : particularly relevant if taken alone
Y : particularly relevant if combined with another document of the same category
A : technological background
O : non-written disclosure
P : intermediate document

T : theory or principle underlying the invention
E : earlier patent document, but published on, or after the filing date
D : document cited in the application
L : document cited for other reasons

& : member of the same patent family, corresponding document

EPO FORM 1503 03.82 (P04C01)