(19) Europäisches Patentamt
European Patent Office
Office européen des brevets

(11) Publication number : **0 687 646 A2**

(12) **EUROPEAN PATENT APPLICATION**

(21) Application number : **95201323.3**

(22) Date of filing : **19.05.95**

(51) Int. Cl.[6] : **B66B 9/08,** A61G 5/12, A47C 7/54

(30) Priority : **20.05.94 NL 9400832**

(43) Date of publication of application : **20.12.95 Bulletin 95/51**

(84) Designated Contracting States : **BE DE GB NL**

(71) Applicant : **Otto Ooms B.V.**
Lekdijk Oost 27a
NL-2861 GB Bergambacht (NL)

(72) Inventor : **Altorf, Erich**
Hofkampweg 210
NL-2241 KK Wassenaar (NL)
Inventor : **Verbrugge, Jeroen Klaasjan**
Commisaris Jasweg 17
NL-3151 TB Hoek van Holland (NL)
Inventor : **Heijdenrijk, Stijn**
Vroezenlaan 2a
NL-3039 DS Rotterdam (NL)

(74) Representative : **Louet Feisser, Arnold et al**
Trenité Van Doorne
De Lairessestraat 133
NL-1075 HJ Amsterdam (NL)

(54) **A chair lift and a chair unit for such a chair lift**

(57) A chair lift comprising guide means (1) to be mounted along a staircase, a frame (2) supported by the guide means and being movable along the guide means, driving means for moving the frame (2), and a chair unit (4) supported by the frame (2). The chair unit (4) comprises a seat (5), a back support (8) and an armrest (11) which is capable of pivoting movement between a raised position and a substantially horizontal operating position. The armrest (11) is connected to a hinged arm (12), which hinged arm (12) is pivotally connected with the seat (5) by means of a first hinge construction (14). The armrest (11) can be pivotally connected to the hinged arm (12) by means of a second hinge construction (13).

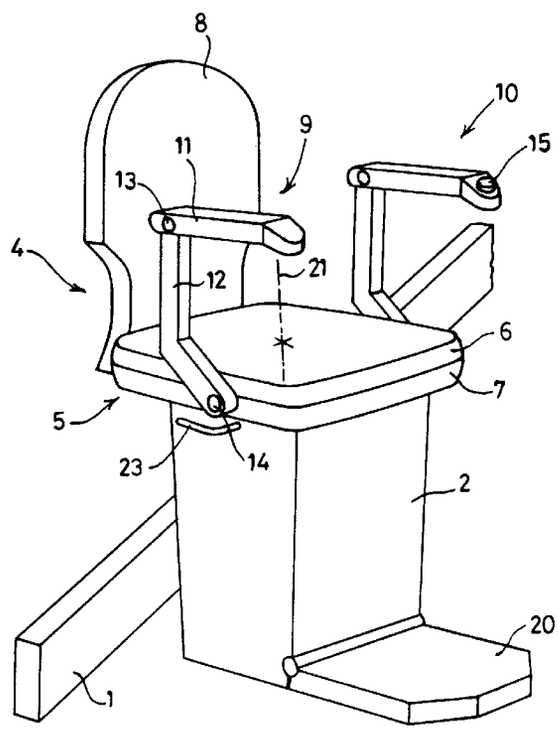

FIG: 1.

EP 0 687 646 A2

The present invention relates to a chair lift comprising guide means to be mounted along a staircase, a frame supported by said guide means and being movable along said guide means, driving means for moving said frame, and a chair unit supported by said frame, said chair unit comprising a seat, a back support and an armrest which can move between a raised position and a substantially horizontal operating position.

Chair lifts are used to convey in particular handicapped people seated on the chair unit of the chair lift between various floors of buildings. Chair lifts are in particular installed along the staircase of existing houses when one of the occupants has difficulty walking or becomes handicapped.

A chair lift of the kind referred to in the introduction is for example known from NL-A-9200437. The guide means of this known chair lift consist of a metal I-section, whose shape is substantially adapted to the way in which the staircase extends. The frame of the chair lift is guided along the I-section by means of rollers. The frame is moved by means of an electric driving mechanism, which is housed within said frame and which engages the I-section with a geared transmission.

The chair unit of the known chair lift consists of a seat, a back support extending vertically at the rear side of the seat, and two armrests provided on either side of the seat and being positioned some distance above said seat. The armrests function to support the arms of the person to be conveyed, of course, but in addition to that they function to keep that person from sliding from the seat. The armrests of the known chair lift are each directly secured to the back support by means of a hinge, as a result of which they can be moved between a horizontal operating position and a raised position, in which they extend upwards along the back support. The hinges are located at substantially the same level as the armrests in the operating position.

Providing armrests which can be swung back is advantageous for two reasons. In the first place this facilitates sitting down on the seat, in particular if a handicapped person is to transfer from a wheelchair to the chair lift. In the second place the chair lift, in particular when installed in an existing house, constitutes an obstacle in the passage of the stairway. Raising the armrests results in a considerably widened passage.

The construction of the armrests of the known chair lift is disadvantageous for a number of reasons. In the first place an armrest of a chair must be able to withstand (in particular vertical) loads of a magnitude many times that of the weight of a person to be conveyed. With the known chair lift this requires a very heavy construction of in particular the armrests, the back support, as well as the hinge construction. In the second place the consequence of the known position of the hinges of the armrests is that the armrests project rather far upward in their raised position. In some situations the available height in houses is insufficient to move the chair lift along the guide means with the armrests in their raised position.

The object of the present invention is to eliminate the drawbacks referred to above and to provide a chair lift comprising an armrest construction which can readily be made to withstand heavy loads and which can be swung back in a manner so as to save space, whilst at the same time making it possible to sit down on the seat of the chair lift without difficulty.

This objective is achieved by a chair lift of the kind referred to above, which is characterized in that the armrest is connected to a hinged arm, said hinged arm being pivotally connected with the seat by means of a first hinge construction at a distance from the back support. The said distance is preferably one fifth of the length of the seat or more. The pivoting movements of the hinged arm with respect to the seat may be limited by stop means, so that the operating position and the raised position of the armrest construction are defined by said stop means. The stop means may be realized in various ways, as an integral part of the hinge construction, for example.

As a result of the above measure according to the invention a load which is exerted on the armrest is not transmitted to the back support, but directly to the seat. The advantage of this is that the back support may be made less strong and thus lighter and less voluminous, whilst the transmission of the load on the armrest directly to the load-bearing frame of the chair lift is also advantageous.

Preferably the armrest is connected to the hinged arm by means of a second hinge construction. The presence of a hinge construction between the hinged arm and the armrest makes it possible in a simple manner to design the armrest construction in such a manner that it can be swung back completely, as a result of which unimpeded access to the seat from the side is possible.

Preferably the first hinge construction is provided in such a manner, that in the operating position of the armrest the first hinge construction is positioned below the armrest. As a result of this the torsional moment on the first hinge construction caused by the load exerted on the armrest is minimized.

In one advantageous embodiment the first hinge construction is provided in the region between the front side of the seat and the center of the seat. It has become apparent that in use the largest loads appear to be exerted on the forwardly projecting end of the armrest of a chair lift. As already said before the location of the first hinge construction proposed in accordance with this measure is aimed at minimizing the torque exerted on the hinge construction.

In another embodiment the hinged arm and the armrest are designed such that in the operating pos-

ition of the armrest the second hinge construction is located closer to the back support than the first hinge construction.

In one preferred embodiment the construction of the hinged arm is such that in the operating position of the armrest a first part of the hinged arm extends substantially vertically downwards from said second hinge construction and that a second part of the hinged arm contiguous thereto slopes downwards and forwards up to the first hinge construction. The object of this measure is to prevent the hinged arm which extends upwards on one side of the seat in the operating position from constituting an undesirable impediment to the freedom of movement in lateral direction of the legs of the person seated on the chair unit. The hinged arm is placed more to the rear, as it were, while the first hinge construction may still be advantageously located near the front edge of the seat. This shape of the hinged arm furthermore makes it possible in a simple manner for the hinged arm to be positioned beside the seat and the back support as much as possible when raised, as a result of which the hinged arm does not obstruct access to the seat in any way.

In a technically readily feasible embodiment the first and the second hinge construction comprise a first pivot pin connected to the seat and second pivot pin connected to the armrest respectively, said pivot pins each extending into an associated bore in the hinged arm.

The exclusive right applied for furthermore relates to a chair unit for a chair lift according to the invention, since the chair unit according to the invention may also be provided in existing chair lifts.

The invention will be explained in more detail hereafter with reference to an embodiment of the chair lift according to the invention diagrammatically illustrated in the drawing, in which:

Figure 1 is a perspective view of an embodiment of the chair lift according to the invention;

Figure 2 is a schematic side view of the chair lift of Figure 1, with an armrest in operating position;

Figure 3 is a schematic side view of the chair lift of Figure 1, with an armrest in raised position; and

Figure 4 is a schematic side view of the control knob of the chair lift of Figure 1.

Figure 1 shows a chair lift according to the invention, which is provided with guide means in the form of a metal guide rail 1 to be mounted along a staircase. The rail 1 is usually secured to the wall of the stairwell and/or to the staircase itself. The chair lift furthermore comprises a box-shaped frame 2. Said frame 2 is provided with bearing rollers (not shown), which engage the rail 1, so that the frame 2 is supported by the rail 1.

The frame 2 houses an electromotor, whose outgoing shaft drives a gear, which is in engagement with a rack (not shown) formed on the rail 1. By reversing the direction of rotation of the electromotor the frame 2 may be moved upwards or downwards along the rail 1 as desired.

The chair lift comprises a chair unit 4 for conveying a person in seated position, which chair unit will be described in more detail hereafter. The chair unit 4 comprises a seat 5 consisting of a cushion 6 and a solid metal base 7. The chair unit 4 furthermore comprises a back support 8, which is secured to the seat 5. Furthermore the chair unit 4 comprises two substantially identical armrest constructions 9, 10, one of which (9) will be described in more detail hereafter, which function to support the arms of the person to be conveyed and to prevent that person from sliding from the seat 5 unintentionally.

The armrest construction 9 according to the invention comprises an armrest 11 and a hinged arm 12. The armrest 11 is pivotally coupled to the hinged arm 12 by means of a pivot pin 13 extending through a bore in the hinged arm 12. As a result of the substantially horizontal position of the pivot pin 13 the armrest 9 pivots in a substantially vertical plane. Stops (not shown) limit the pivoting movement of the armrest 11 between a position perpendicular to the hinged arm 12 (Figure 2) and a position approximately in line with the hinged arm 12 (Figure 3). The hinged arm 12 is in turn pivotally coupled to the base 7 of the seat 5, by means of a horizontal pivot pin 14 extending into a next bore in the hinged arm 12, said pivot pin 14 being fixed to the base 7 of the seat 5. Also here the pivoting movement of the hinged arm 12 relative to the seat 5 is limited, by stops not shown, between the positions shown in Figures 2 and 3.

Figures 2 and 3 clearly show the positions of the pivot pins 13 and 14 relative to the seat 5, the armrest 11, and each other. In the illustrated example the pivot pin 14 is positioned at a distance of approximately 1/3 of the depth of the seat 5 from the front edge of the seat 5. This position is advantageous, since the loads being exerted on the armrest 11, in particular vertical loads in safety tests, now result in a slight bending moment on the point where the hinged arm 12 engages the base 7 of the seat 5. According to the invention the hinged arm 12 is cranked, as a result of which the part of the hinged arm 12 projecting above the cushion 6 is located further rearwards with respect to the pivot pin 14. As a result of this it is achieved that the lateral freedom of movement at the front side of the cushion 6 of the legs of the person seated on the chair unit 4 is not undesirably limited.

In particular Figure 3 clearly shows that the design of the armrest construction 9 comprising two hinge constructions 13, 14 makes it possible in a simple manner, by suitable selection of the dimensions of the parts, to move the entire armrest construction 9 to the raised position beside the back support 8 and the seat 5. Thus a person can sit down on the side of the seat 5 without experiencing any obstruction at all.

Furthermore it appears that the armrest 11 does not project above the back support 8, as a result of which the chair lift according to the invention is also suitable for use in situations where the available height is limited.

The armrest construction 10 is provided with a control knob 15 for the drive of the chair lift (see Figure 4). The control knob 15 is shown in more detail in Figure 4 and substantially consists of a cylindrical disc 17 connected to an electric switch (not shown) located thereunder. The upper side of the control knob is made up of a convex cover 18, the circumferential edge of which slightly projects from the cylindrical outer circumference of the disc 17. The thickness of the disc 17 is slightly larger than the thickness of a person's thumb, so that a person is able to put his hand over the control knob 15 and engage under the projecting edge of the cover 18 with his thumb. For the potential users of chair lifts this construction of the control knob appears to be considerably more advantageous than the joysticks or pushbuttons used so far.

The chair lift is provided, in a manner known per se, with a swing-back foot support 20 (see Figure 1) for supporting the legs of the person to be conveyed. Furthermore the entire chair unit 4 can be pivoted relative to the frame 2 about a vertical pivot pin 21, which is located substantially in the center of the seat 5. This is a known solution to facilitate sitting down on the seat 5 in a number of situations. The locking and unlocking of this pivoting movement of the chair unit 4 takes place by means of the control handle 23.

Claims

1. A chair lift comprising guide means (1) to be mounted along a staircase, a frame (2) supported by said guide means (1) and being movable along said guide means (1), driving means for moving said frame (2), and a chair unit (4) supported by said frame (2), said chair unit (4) comprising a seat (5), a back support (8) and an armrest (11) which can move between a raised position and a substantially horizontal operating position, **characterized in that** said armrest (11) is connected to a hinged arm (12), said hinged arm (12) being pivotally connected with said seat (5) by means of a first hinge construction (14) at a distance from the back support (8).

2. A chair lift according to claim 1, **characterized in that** the armrest (11) is connected to the hinged arm (12) by means of a second hinge construction (13).

3. A chair lift according to claim 1 or 2, **characterized in that** said first hinge construction (14) is provided in such a manner, that in the operating position of the armrest (11) the first hinge construction (14) is positioned below the armrest (11).

4. A chair lift according to any one of the preceding claims, **characterized in that** said first hinge construction (14) is provided in the region between the front side of the seat (5) and the center of the seat (5).

5. A chair lift according to any one of the preceding claims, **characterized in that** said hinged arm (12) and said armrest (11) are designed such that in the operating position of the armrest (11) the second hinge construction (13) is located closer to the back support (8) than the first hinge construction (14).

6. A chair lift according to claim 5, **characterized in that** the construction of the hinged arm (12) is such, that in the operating position of the armrest (11) a first part of the hinged arm (12) extends substantially vertically downwards from said second hinge construction (13) and that a second part of the hinged arm (12) contiguous thereto slopes downwards and forwards up to the first hinge construction (14).

7. A chair lift according to any one of the preceding claims, **characterized in that** said first and said second hinge construction comprise a first pivot pin (14) connected to the seat (5) and second pivot pin (13) connected to the armrest (11) respectively, said pivot pins (13,14) each extending into an associated bore in the hinged arm (12).

8. A chair unit (4) for a chair lift according to any one of the preceding claims.

9. A chair lift comprising guide means to be mounted along a staircase, a frame (2) supported by said guide means and being movable along said guide means, driving means for moving said frame (2), and a chair unit (4) supported by said frame (2), said chair unit (4) comprising a seat (5), a back support (8) and an armrest (11), as well as a control knob (15) for the driving means provided on said armrest, **characterized in that** said control knob (15) comprises a disc shaped body (17).

10. A chair lift according to claim 9, characterized in that said control knob (15) comprises a circumferential edge projecting from the outer circumference of the disc shaped body (17) at some distance from the surface of the armrest, the disc shaped body (17) being preferably cylindrical.

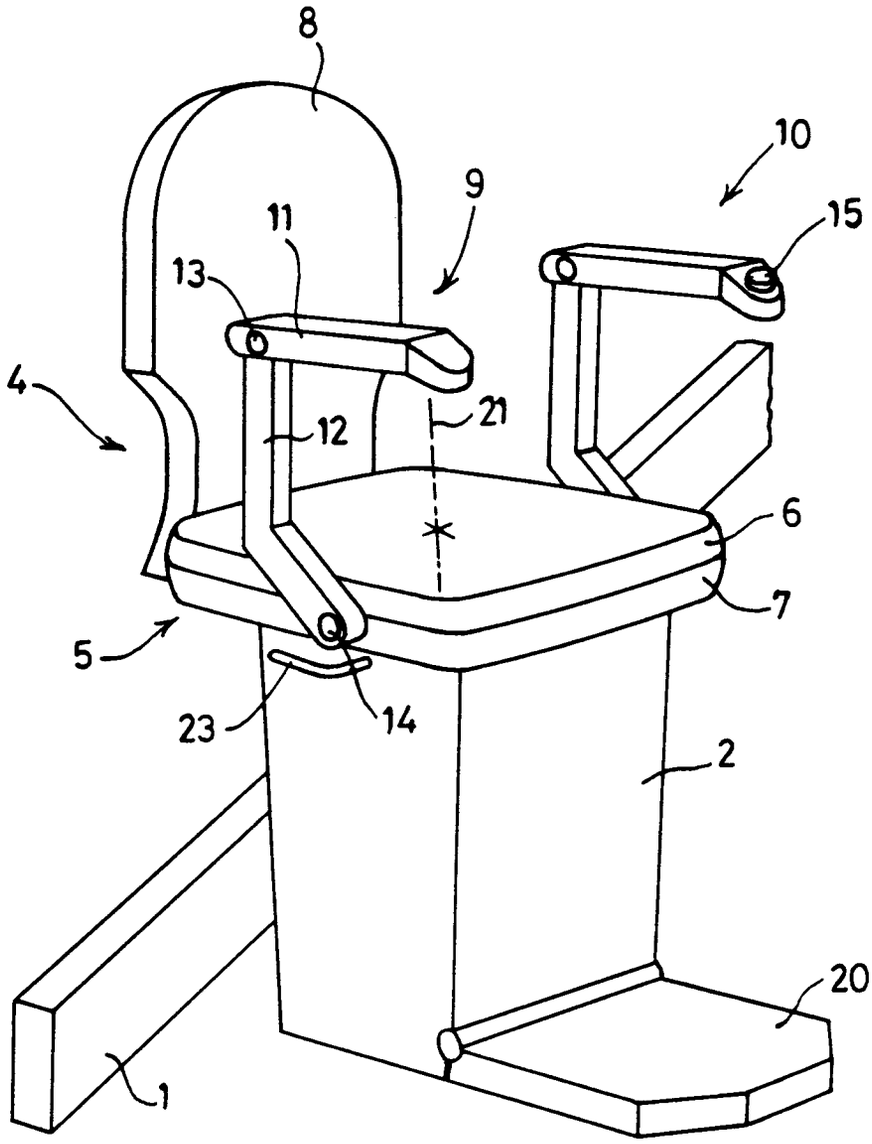

FIG: 1.

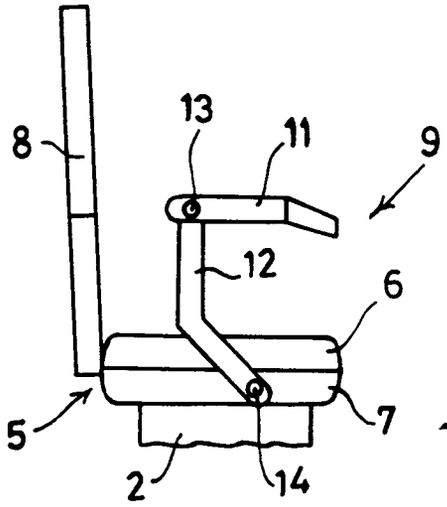

Fig: 2.

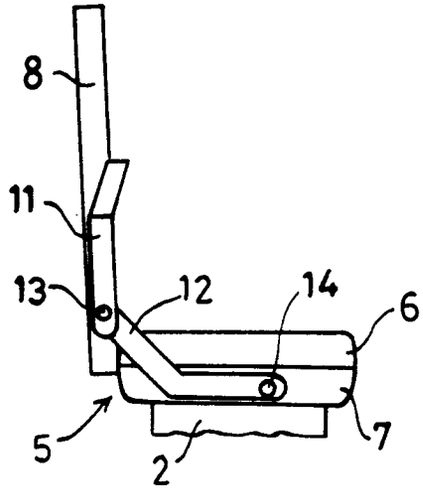

Fig: 3.

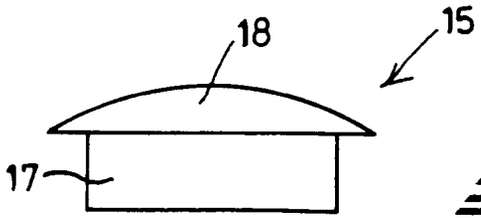

Fig: 4.