(19) Europäisches Patentamt
European Patent Office
Office européen des brevets

(11) EP 0 813 974 A3

(12) EUROPEAN PATENT APPLICATION

(88) Date of publication A3:
16.06.1999 Bulletin 1999/24

(43) Date of publication A2:
29.12.1997 Bulletin 1997/52

(21) Application number: **97304185.8**

(22) Date of filing: **16.06.1997**

(51) Int Cl.[6]: **B41J 29/02**, B41J 25/34, B41J 2/08, B41J 2/155

(84) Designated Contracting States:
AT BE CH DE DK ES FI FR GB GR IE IT LI LU MC NL PT SE

(30) Priority: **18.06.1996 US 665563**

(71) Applicant: **Scitex Digital Printing, Inc.**
Dayton, Ohio 45420-4099 (US)

(72) Inventors:
- **Simon, Robert J.**
Bellbrook, Ohio 45305 (US)
- **Bowling, Bruce A.**
Beavercreek, Ohio 45432-2613 (US)

(74) Representative: **Freed, Arthur Woolf et al**
Reginald W. Barker & Co.,
Chancery House,
53-64, Chancery Lane
London, WC2A 1QU (GB)

(54) **Continuous ink jet print head**

(57) A larger print width print head apparatus (10) for an ink jet printer comprises a droplet generating means (12) and a means (16) for providing fluid to the droplet generating means. The apparatus further comprises a means (14) for charging and collecting drops from the droplet generating means and a means for providing data signals to the means for charging and collecting drops. The apparatus further comprises a two-member housing means containing the print head apparatus (10) with removable ink jet components so that failed ink jet components can be returned to a central refurbishment center without sending all the associated electronics.

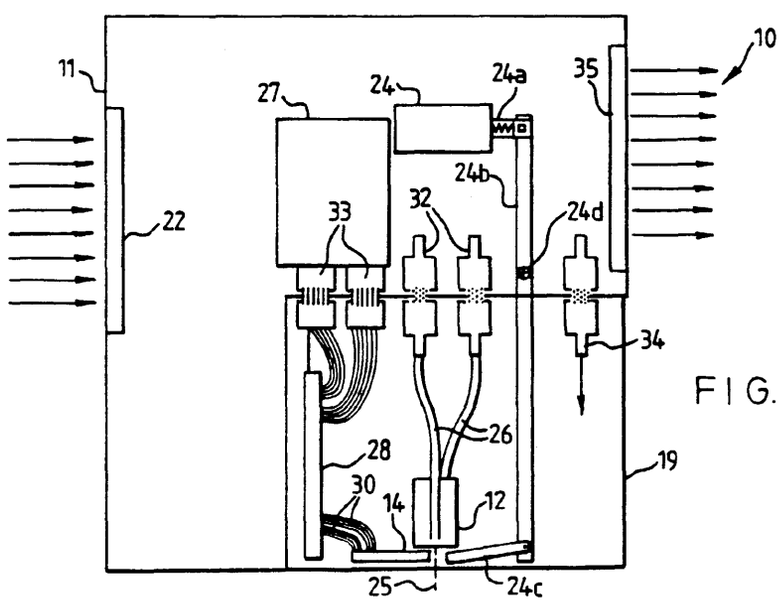

FIG.2

EP 0 813 974 A3

European Patent Office

EUROPEAN SEARCH REPORT

Application Number
EP 97 30 4185

DOCUMENTS CONSIDERED TO BE RELEVANT

Category	Citation of document with indication, where appropriate, of relevant passages	Relevant to claim	CLASSIFICATION OF THE APPLICATION (Int.Cl.6)
X	US 4 847 631 A (O. NARUSE ET AL.) 11 July 1989 * column 2, line 58 - column 3, line 10 * * column 3, line 47 - line 68; figures 1-3,14 *	1-7,9	B41J29/02 B41J25/34 B41J2/08 B41J2/155
Y	---	8,10	
D,Y	US 5 455 611 A (R. J. SIMON ET AL.) 3 October 1995 * column 2, line 36 - line 38; figure 1 *	8,10	
A	* claim 1 *	1-7,9	

A	US 4 617 574 A (JEAN-CLAUDE MILLET ET AL.) 14 October 1986 * column 1, line 55 - column 2, line 6; figure 1 *	1,5,9	

A	US 4 809 015 A (B. A. BOWLING ET AL.) 28 February 1989 * column 3, line 28 - column 4, line 17; figure 3 *	1,5,9	

TECHNICAL FIELDS SEARCHED (Int.Cl.6)

B41J

The present search report has been drawn up for all claims

Place of search	Date of completion of the search	Examiner
BERLIN	15 April 1999	Ducreau, F

CATEGORY OF CITED DOCUMENTS

X : particularly relevant if taken alone
Y : particularly relevant if combined with another document of the same category
A : technological background
O : non-written disclosure
P : intermediate document

T : theory or principle underlying the invention
E : earlier patent document, but published on, or after the filing date
D : document cited in the application
L : document cited for other reasons

& : member of the same patent family, corresponding document

EPO FORM 1503 03.82 (P04C01)

ANNEX TO THE EUROPEAN SEARCH REPORT ON EUROPEAN PATENT APPLICATION NO. EP 97 30 4185

This annex lists the patent family members relating to the patent documents cited in the above-mentioned European search report.
The members are as contained in the European Patent Office EDP file on
The European Patent Office is in no way liable for these particulars which are merely given for the purpose of information.

15-04-1999

Patent document cited in search report	Publication date	Patent family member(s)	Publication date
US 4847631 A	11-07-1989	JP 63022654 A	30-01-1988
		JP 63025051 A	02-02-1988
		JP 63028656 A	06-02-1988
US 5455611 A	03-10-1995	DE 69306859 D	06-02-1997
		DE 69306859 T	24-07-1997
		EP 0571785 A	01-12-1993
		JP 6218931 A	09-08-1994
US 4617574 A	14-10-1986	FR 2542257 A	14-09-1984
		AU 576751 B	08-09-1988
		AU 2575584 A	28-09-1984
		CA 1225876 A	25-08-1987
		DE 3473582 A	29-09-1988
		EP 0135558 A	03-04-1985
		WO 8403474 A	13-09-1984
		JP 4052779 B	24-08-1992
		JP 60500660 T	09-05-1985
US 4809015 A	28-02-1989	WO 8908561 A	21-09-1989

EPO FORM P0459

For more details about this annex : see Official Journal of the European Patent Office, No. 12/82