(19) Europäisches Patentamt
European Patent Office
Office européen des brevets

(11) EP 0 826 812 A3

(12) **EUROPEAN PATENT APPLICATION**

(88) Date of publication A3:
07.10.1998 Bulletin 1998/41

(51) Int Cl.[6]: **D06F 55/02**

(43) Date of publication A2:
04.03.1998 Bulletin 1998/10

(21) Application number: **97401368.2**

(22) Date of filing: **16.06.1997**

(84) Designated Contracting States:
AT BE CH DE DK ES FI FR GB GR IE IT LI LU MC NL PT SE

(30) Priority: **28.08.1996 JP 227183/96**

(71) Applicant: **NKG Co., Ltd.**
Hiroshima-shi, Hiroshima 733 (JP)

(72) Inventor: **Ohsugi, Yasuhiro, c/o NKG Co., Ltd.**
Hiroshima-shi, Hiroshima 733 (JP)

(74) Representative: **Bertrand, Didier et al**
c/o S.A. FEDIT-LORIOT & AUTRES
CONSEILS EN PROPRIETE INDUSTRIELLE
38, Avenue Hoche
75008 Paris (FR)

(54) **Clothes Peg**

(57) A clothespin (10) is provided wherein a pair of pinching members (2) have each on one side of the opposed pinching surfaces a plurality of parallel grooves (21a) in the direction from the pivotally supported position of the pinching member (2) to the pinching surface, so that, in applying a washing, the pinching members are operated to hold the object with the grooves (21a) in mutually biting manner, and in releasing the pinched washing, the washing may be pulled out in the direction of the groove to release from the pinched surface without widening the space of the opposed pinching surfaces by operating the pinching members (2).

FIG. 2

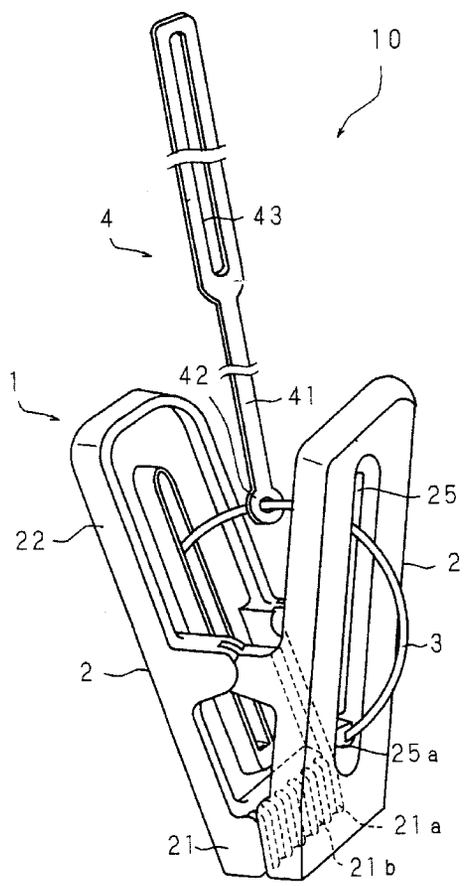

EP 0 826 812 A3

European Patent Office

EUROPEAN SEARCH REPORT

Application Number
EP 97 40 1368

DOCUMENTS CONSIDERED TO BE RELEVANT

Category	Citation of document with indication, where appropriate, of relevant passages	Relevant to claim	CLASSIFICATION OF THE APPLICATION (Int.Cl.6)
X	CH 677 681 A (VOLARIS V CASTIGLIONE) 14 June 1991 * column 1, line 56 - column 2, line 30; figure 1 *	1,2	D06F55/02
X	DE 70 16 901 U (FERRA J) 26 November 1970 * the whole document *	1,2	
X	GB 643 244 A (SUTCLIFFE MOULDED RUBBER CO) 15 September 1950 * the whole document *	3,4	
X	GB 714 990 A (PLACE A P) 8 September 1954 * the whole document *	3,4	
X	US 4 063 333 A (SCHWEITZER RUSSELL A) 20 December 1977 * column 3, line 23 - column 4, line 26; figures 1-4 *	5	
A	PATENT ABSTRACTS OF JAPAN vol. 096, no. 007, 31 July 1996 & JP 08 071293 A (AOKI NAOYUKI), 19 March 1996 * abstract *	1,3,5	TECHNICAL FIELDS SEARCHED (Int.Cl.6) D06F
A	US 2 209 697 A (KISLINGBURY M.R. ET AL) 30 July 1940 * the whole document *	1-5	
A	US 3 624 673 A (MERCHANT PAUL A ET AL) 30 November 1971 * the whole document *	5	

The present search report has been drawn up for all claims

Place of search	Date of completion of the search	Examiner
THE HAGUE	11 August 1998	Norman, P

CATEGORY OF CITED DOCUMENTS

X : particularly relevant if taken alone
Y : particularly relevant if combined with another document of the same category
A : technological background
O : non-written disclosure
P : intermediate document

T : theory or principle underlying the invention
E : earlier patent document, but published on, or after the filing date
D : document cited in the application
L : document cited for other reasons

& : member of the same patent family, corresponding document

EPO FORM 1503 03.82 (P04C01)