(19) Europäisches Patentamt
European Patent Office
Office européen des brevets

(11) EP 0 882 529 A1

(12) EUROPEAN PATENT APPLICATION

(43) Date of publication:
09.12.1998 Bulletin 1998/50

(51) Int. Cl.[6]: **B21D 11/12**, B21F 1/00

(21) Application number: **98109427.9**

(22) Date of filing: **25.05.1998**

(84) Designated Contracting States:
AT BE CH CY DE DK ES FI FR GB GR IE IT LI LU MC NL PT SE
Designated Extension States:
AL LT LV MK RO SI

(30) Priority: **29.05.1997 IT US970100**

(71) Applicant:
M.E.P. Macchine Elettroniche Piegatrici S.p.A.
I-33010 Reana del Rojale (UD) (IT)

(72) Inventors:
- **Del Fabro, Giorgio**
  33019 Tricesimo (UD) (IT)
- **Del Fabro, Marcello**
  33100 Udine (IT)

(74) Representative:
Petraz, Gilberto Luigi et al
GLP S.r.l.
Piazzale Cavedalis 6/2
33100 Udine (IT)

(54) Bending method with mobile bending assembly and relative shaping machine

(57) Bending method for machines to shape metallic shapes, particularly but not exclusively round pieces (16) used for reinforcement purposes in the building trade, the machine including a work plane (11) on which there is a bending assembly (12), a drawing and possibly straightening assembly (14) arranged upstream of the bending assembly (12) and a shearing assembly (15) arranged between the drawing assembly (14) and the bending assembly (12), there also being included at least an assembly (17b) to retain the round piece (16) which can be temporally excluded, the system providing that, when bending is started, the round piece (16) is positioned by the drawing assembly (14) in cooperation with the bending assembly (12) in order to bend the leading end, then the round piece (16) is made to advance by a desired segment and then sheared to size by the shearing assembly (15) so that the trailing end of the round piece (16) is positioned in cooperation with the bending assembly (12), the round piece (16) then being held in position by the at least one retaining assembly (17b), the bending assembly (12) then being displaced progressively from the trailing end of the round piece (16) towards the leading end and stopped in correspondence with the position of the intermediate bends to be made on the round piece (16).

Shaping machine which achieves the method as described above.

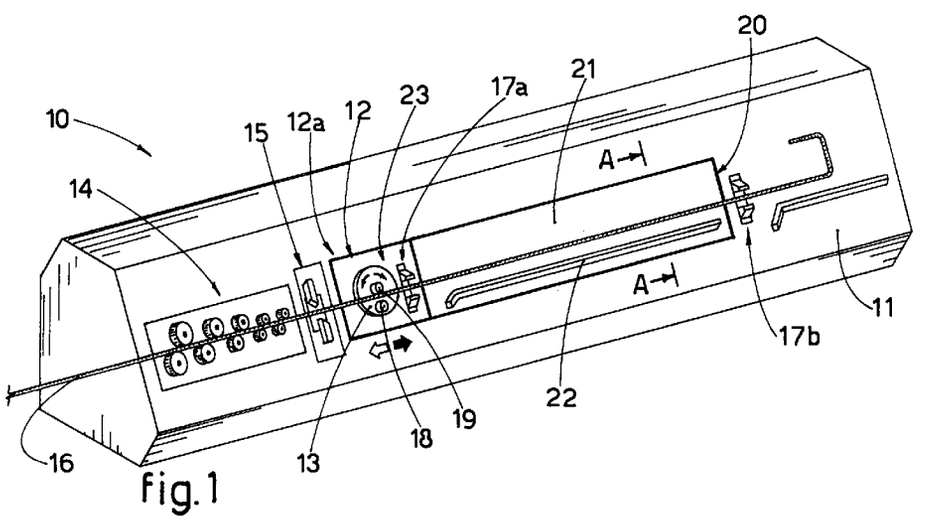

fig.1

EP 0 882 529 A1

Description

FIELD OF APPLICATION

This invention concerns a bending method with a mobile bending assembly and the relative shaping machine as set forth in the respective main claims.

The invention is employed preferentially, but not exclusively, to shape round pieces used for reinforcement purposes in the building trade, but it may be employed equally well to bend pipes, full-section or hollow bars or other shapes in general.

For reasons of practicality, we shall refer hereinafter to a specific use of the invention for round pieces used for reinforcement purposes, and therefore the term 'round piece' shall include all other sections which can be used to make bars and/or brackets for reinforcement purposes.

'Round piece' shall also be taken to include bundles of superimposed round pieces shaped at the same time.

STATE OF THE ART

The state of the art includes bending/shaping machines used to make rods and/or brackets for reinforcement purposes in the building trade. These machines are equipped with bending assemblies consisting substantially of a rotary disk including a central contrasting pin and a peripheral contrasting pin.

The round piece which is to be bent is inserted between the two pins and is shaped by rotating the disk with the desired angle and in the desired direction according to the geometry of the shape to be obtained.

There are also bending assemblies known to the state of the art which, as an alternative to the contrasting pin, have other contrasting elements, for example of the winged type, comprising a lengthwise containing hollow through which the round piece to be bent passes.

Upstream of the bending/shaping machines known to the state of the art, whether they have one or more bending stations, there are usually assemblies to feed the round piece, possibly straightening assemblies and assemblies to shear to size.

Downstream of the bending/shaping machines, there may be assemblies to discharge and collect the shaped round piece.

Bending/shaping machines known to the state of the art may have the work plane inclined to the horizontal, which improves the functioning of the machine and the operational characteristics, particularly during the discharge of the finished products.

Bending/shaping machines which have two bending stations are often preferred to those which have only one bending station due to their greater speed; on the other hand, however, machines with two bending stations are much more costly.

In bending/shaping machines known to the state of the art, the shaping of the round piece is achieved by making the round piece advance and/or retreat with respect to the stationary bender(s), according to the planned design of the shaped product; as the round piece is gradually moved, it is sequentially shaped by the bending assembly along a segment of a desired length.

On the other hand, there are also bending machines wherein it is the bending assemblies which are displaced lengthwise to the round piece so as to achieve the bends at the desired points.

For example, DE-A-39 19 607 describes a bending method which uses a bending trolley movable along the bar which is to be bent; the bars are bent by displacing the bending trolley with respect to the attachment device which is preset to clamp the bars during bending.

EP-A-715 907 describes a device including a bending station attached to the machine and a bending station which is movable lengthwise to the machine; each of the two bending stations includes its own bending organ and its own clamping organ.

In this device, a first end of the bar is inserted into the stationary bending station and the second end of the bar is inserted into the movable bending station.

The movable bending station is first used to position the first end of the bar lengthwise so that it can be bent by the stationary bending station, then it is used to bend the second end of the bar and then to move the bar lengthwise with respect to the stationary bending station in order to make the bends in the correct positions.

This device needs two different bending stations with the relative drive and movement organs.

DE 94 06 880 also describes a bending machine with two bending stations which are movable lengthwise; it includes a clamping device, which is also movable lengthwise, at an intermediate position between the two stations. The position of the clamping device with respect to the bending stations is regulated by a command device during the bending cycle. The present applicant has designed and embodied this invention in order to achieve a versatile bending method for simple and functional bending machines with a bending assembly and to obtain further advantages.

DISCLOSURE OF THE INVENTION

The invention is set forth and characterised in the respective main claims while the dependent claims describe variants of the idea of the main embodiment.

The purpose of the invention is to obtain a method to bend round pieces for reinforcement purposes, pipes, full-section or hollow bars or other shapes in general, which will be reliable, versatile and functional regardless of the diameter of the round piece to be shaped and/or the type of bend to be performed.

A further purpose of the invention is to provide a shaping machine characterised by high productivity and

reliability.

The shaping machine according to the invention includes a bending assembly upstream of which there is at least an assembly to feed the round piece and an assembly to shear to size.

According to the invention, the bending assembly can be moved lengthwise with respect to the round piece to be shaped.

According to one possible embodiment, the bending assembly can have at least a first position, wherein bending is started, at least a second position, wherein bending is finished, and a plurality of intermediate positions between the said first and second positions coherent with the position of the bends to be made.

The bending assembly may be of any type whatsoever, for example including a rotary bending disk supporting at least a bending pin and one or more contrasting pins.

However, it is possible to use bending assemblies of other types.

According to the invention, the bending assembly cooperates with retaining means which temporally clamp and guide the round piece which is to be shaped, when the bending assembly moves lengthwise with respect to the round piece to position itself according to the bends which are to be made.

According to a variant, the retaining means comprise two retaining assemblies of which at least one is solid with the bending assembly.

According to one embodiment of the invention, the bending assembly moves within a sliding seating and its journey is determined by the length thereof.

According to a variant, the sliding seating cooperates with closing means whose function is to at least partially close the sliding seating when the bending assembly is in the start-of-bending position in close proximity with the feeding assembly and the shearing assembly.

According to the invention, when the bending assembly is in the start-of-bending position, the round piece to be shaped is fed to the bending assembly which performs sequentially the desired shaping of the leading end.

Once the shaping of the leading end has been accomplished, the round piece is made to advance for a desired segment then sheared to size by the shearing assembly and kept stationary in this advanced position by the retaining means.

According to the invention, if there is a sliding seating for the bending assembly, during the step when the round piece advances, the relative closing means are taken to the closed position, defining a work plane which facilitates the advance of the round piece and prevents it stopping accidentally or jamming in the sliding seating.

When the round piece has finished advancing, the closing means of the sliding seating are taken to a position of non-contact so as to allow the lengthwise movement of the bending assembly in the sliding seating with respect to the round piece, which is held stationary.

As the bending assembly gradually advances, it stops in the pre-determined positions in order to perform the desired shaping on the round piece sequentially, starting from the trailing end and moving towards the leading end of the round piece which has already been shaped.

According to a variant, a retaining assembly solid with the bending assembly clamps the round piece every time the bending assembly makes a bend.

When the bending is concluded, the shaped round piece is discharged by the machine, the bending assembly is returned to its start-of-bending position and the closing means returned to the closed position of the sliding seating; it is thus possible to begin a new bending cycle.

According to a variant, the bending assembly, or part thereof, can be moved at a right angle to the plane of the machine so that it can be temporarily positioned in such a way that both left-hand and right-hand bends can be accomplished.

ILLUSTRATION OF THE DRAWINGS

The attached Figures are given as a non-restrictive example, and show some preferential embodiments of the invention as follows:

Fig. 1	shows a three-dimensional view of a possible embodiment of a shaping machine using the bending method according to the invention;
Fig. 2	shows an enlarged cross-section from A to A of Fig. 1;
Figs. 3a-3f	show in diagram form a bending cycle of the machine shown in Fig. 1;
Fig. 4	shows a part view of a variant of Fig. 1;
Fig. 5	shows a side view of Fig. 4.

DESCRIPTION OF THE DRAWINGS

The shaping machine 10 according to the invention for round pieces 16 for reinforcement purposes shown in Fig. 1 is of the type which has an inclined work plane 11 cooperating with a bending assembly 12.

In this case, the bending assembly 12 consists of a rotary disk 13 on the periphery of which a bending pin 18 is solidly associated.

A central contrasting pin 19 cooperates with the rotary disk 13 and the bending pin 18.

It is however possible to use other types of bending assemblies 12, for example of the type which includes contrasting means of the winged type with a lengthwise containing hollow through which the round piece 16 transits, or of any other type.

Upstream of the bending assembly 12 there is a drawing assembly 14, in this case of the pinch roll type,

which also has the function of partially straightening the round piece 16 fed, for example, from a reel.

Between the bending assembly 12 and the drawing assembly 14 there is a shearing assembly 15, in this case, a shears.

Downstream of the bending assembly 12, in the embodiment shown here, there are two assemblies to retain the round piece 16, respectively the first retaining assembly 17a and the second retaining assembly 17b, in this case of the gripper type.

In the embodiment shown here, the first retaining assembly 17a is solid with the bending assembly 12 and moves therewith, whereas the second retaining assembly 17b is solid with the work plane 11 and therefore stationary with respect to the bending assembly 12.

Both the retaining assemblies 17a, 17b may be temporally excluded with respect to the work plane 11, for example withdrawing vertically to allow the round piece 16 to advance even when its leading ends are shaped.

According to the invention, the bending assembly 12 can be moved lengthwise to the round piece 16 which is to be shaped.

According to a variant, which is not shown here, the bending assembly 12 can also be moved transversely with respect to the round piece 16 which is to be shaped; this allows the bending assembly 12 to be prearranged to perform both left-hand and right-hand bends.

In this case, the lengthwise movements of the bending assembly 12 occur within the appropriate sliding seating 20.

In this case, the bending assembly 12 is associated with a trolley 23 suitable to slide along mating guides 24.

According to the invention, the sliding seating 20 cooperates with a cover element 21 which is arranged in a closed position when the bending assembly 12 is in the start-of-bending position 12a.

In this start-of-bending position 12a, the bending assembly 12 is at the beginning of the sliding seating 20 near the shearing assembly 15 and the drawing assembly 14.

To be more exact, as shown in Fig. 2, the cover element 21 can assume a closed position 21a which defines a sliding plane on which the round piece 16 can advance without any danger of stopping or jamming against the sliding seating 20.

The cover element 21 on the contrary assumes a position of non-contact 21b, shown as a line of dashes, so as to free the sliding seating 20 and allow the bending assembly 12 to be displaced therein.

In the case of Fig. 2, the cover element 21 travels from the closed position 21a to the position of non-contact 21b and vice versa oscillating around a pin element 25.

According to a variant shown in Figs. 4 and 5, the cover element 21 is made on a trolley 123 which can be moved perpendicularly to the direction of feed of the round piece 16 and is suitable to travel to a position of non-contact (shown by a line of dashes in Fig. 5) as the trolley 23 advances, the position being contained inside the machine 10.

On the lower part of the contact surface between the cover element 21 and the round piece 16 there is a guide element 22 which prevents any downward deflection of the round piece 16.

According to a variant, the guide element 22 can be retracted below the work plane 11; according to another variant, the guide element 22 can be moved at least transversely with respect to the work plane 11.

According to another variant which is not shown here, the cover element 21 and the guide element 22 cooperate at the upper part with a movable limiting element, for example shaped like a plate, which makes it possible to keep the bends of the round piece 16 resting on the cover element 21, or more generally on the work plane 11, thus preventing the round piece 16 from twisting as it advances towards the second retaining assembly 17b.

Figs. 3a-3f show in diagram form some steps in the bending cycle according to the invention.

At the beginning of the cycle (Figs. 1, 3a), the shaping machine 10 has the bending assembly 12 in the start-of-bending position 12a and the segment of the sliding seating 20 located downstream of the bending assembly 12 is closed by the cover element 21 arranged in the closed position 21a.

Subsequently, as shown in Fig. 3b, the round piece 16 is made to advance so that the bending assembly 12 can perform the desired shaping of the leading end sequentially.

While the leading end is being shaped, the bending assembly 12 is held stationary in the start-of-bending position 12a.

When the leading end has been shaped, the round piece 16 is first fed forwards by a desired segment, then stopped and held in position both by the first 17a and also by the second 17b retaining assembly and then sheared to size by the shearing assembly 15 (Fig. 3c).

In this case, the second retaining assembly 17b is stationary; according to a variant it can be moved at least lengthwise with respect to the work plane 11 depending on the length of the segment of the round piece 16 which is to be shaped.

According to another variant which is not shown here, the retaining assembly 17b consists of a gripper which is anchored stationary to the work plane 11 and which acts on the round piece 16 from above.

In this case, moreover, both the first 17a and the second 17b retaining assemblies are of the type which can be retracted and temporally excluded; this makes it possible to take them to a position of non-contact with the bends of the leading ends of the round piece 16 as the latter advances on the work plane 11.

After the round piece 16 has been sheared to size,

the bending assembly 12 moves inside the sliding seating 20, and gradually stops in the necessary positions so as to progressively carry out the intermediate bends on the round piece 16.

As shown in Fig. 3d, during this step the sliding seating 20 is released, and carries the cover element 21 to a position of non-contact 21b.

In this case, three successive bends are made on the round piece 16; the first bend is made with the bending assembly 12 in the start-of-bending position 12a (Fig. 3d), the second bend is made with the bending assembly 12 in the intermediate position 12b arranged in the first half of the sliding seating 20 (Fig. 3e) and the last bend is made with the bending assembly 12 in the end-of-bending position 12c arranged in the second half of the sliding seating 20 (Fig. 3f).

It is therefore obvious that there may be a plurality of intermediate positions 12b depending on the geometry of the finished product to be obtained, and that the end-of-bending position 12c may coincide or not with the end of the sliding seating 20.

According to the invention, the first retaining assembly 17a, during bending, is made to close on the round piece 16 so as to function as a contrast to the bending and, when the bending assembly 12 is moved, the first retaining assembly 17a is opened.

When the bending process is concluded, the retaining assemblies 17a, 17b are opened and the shaped round piece 16 is discharged from the shaping machine 10.

The bending assembly 12 is then taken back to the start-of-bending position 12a and the sliding seating 20 is closed by the cover element 21.

The shaping machine 10 therefore again assumes its initial configuration as shown in Fig. 3a, ready to begin a new cycle of bending.

Claims

1. Bending method for machines to shape metallic shapes, particularly but not exclusively round pieces (16) used for reinforcement purposes in the building trade, the machine including a work plane (11) on which there is a bending assembly (12), a drawing and possibly straightening assembly (14) arranged upstream of the bending assembly (12) and a shearing assembly (15) arranged between the drawing assembly (14) and the bending assembly (12), there also being included at least an assembly to retain the round piece (16) which can be temporally excluded, the system being characterised in that, when bending is started, the round piece (16) is positioned by the drawing assembly (14) in cooperation with the bending assembly (12) in order to bend the leading end, then the round piece (16) is made to advance by a desired segment and then sheared to size by the shearing assembly (15) so that the trailing end of the round piece (16) is positioned in cooperation with the bending assembly (12), the round piece (16) then being held in position by the at least one retaining assembly (17b), the bending assembly (12) then being displaced progressively from the trailing end of the round piece (16) towards the leading end and stopped in correspondence with the position of the intermediate bends to be made on the round piece (16).

2. Method as in Claim 1, in which the bending assembly (12) assumes at least a lengthwise position at the start of bending (12a) cooperating with the leading end of the round piece (16), at least an end-of-bending position (12c) cooperating substantially with the trailing end of the round piece (16) and a plurality of intermediate positions (12b) lengthwise to the round piece (16) depending on the number and position of the intermediate bends to be made.

3. Method as in Claim 2, in which, after the finished shaped product has been discharged from the machine (10), from the end-of-bending position (12c) the bending assembly is returned to the start-of-bending position (12a).

4. Method as in any claim hereinbefore, in which the bending assembly (12), in its lengthwise movements, is made to cooperate with a sliding seating (20) made below the work plane (11) and cooperating with temporal cover means (21).

5. Shaping machine to bend metallic shapes, particularly but not exclusively round pieces (16) used for reinforcement purposes in the building trade, the machine including a work plane (11) on which there is a bending assembly (12), a drawing and possibly straightening assembly (14) arranged upstream of the bending assembly (12) and a shearing assembly (15) arranged between the drawing assembly (14) and the bending assembly (12), there also being included at least an assembly (17b) to retain the round piece (16) which can be temporally excluded, the machine being characterised in that the bending assembly (12) is movable lengthwise with respect to the round piece (16) so as to assume at least a position (12a) wherein bending is started, at least a position (12c) wherein bending is finished, and a plurality of intermediate positions (12b) between the said start-of-bending (12a) and end-of-bending (12c) positions, the intermediate positions (12b) being coherent with the number and position of the bends to be made on the round piece (16) according to the planned design of the shaped product to be obtained.

6. Shaping machine as in Claim 5, in which the bending assembly (12) is associated with a trolley (23)

able to slide inside a sliding seating (20) located below the work plane (11).

7. Shaping machine as in Claim 6, in which the sliding seating (20) cooperates with a cover element (21).

8. Shaping machine as in Claim 7, in which the cover element (21) includes a first closed position (21a) wherein it closes the sliding seating (20) while the round piece (16) is being fed, and a second position (21b) wherein it frees the sliding seating (20) while the round piece (16) is displaced lengthwise.

9. Shaping machine as in Claim 8, in which the cover element (21) oscillates with respect to the work plane (11).

10. Shaping machine as in Claim 8, in which the cover element (21) can be translated backwards with respect to the work plane (11).

11. Shaping machine as in any claim from 5 to 10 inclusive, which includes at least a retaining assembly (17b) solid with the work plane (11) and acting on the round piece (16) at least during the lengthwise displacement of the bending assembly (12).

12. Shaping machine as in any claim from 5 to 11 inclusive, which includes at least a retaining assembly (17a) associated with the bending assembly (12) and acting on the round piece (16) while the round piece (16) is being bent.

13. Shaping machine as in Claims 11 and 12, in which the retaining assemblies (17a, 17b) can be temporally excluded with respect to the work plane (11).

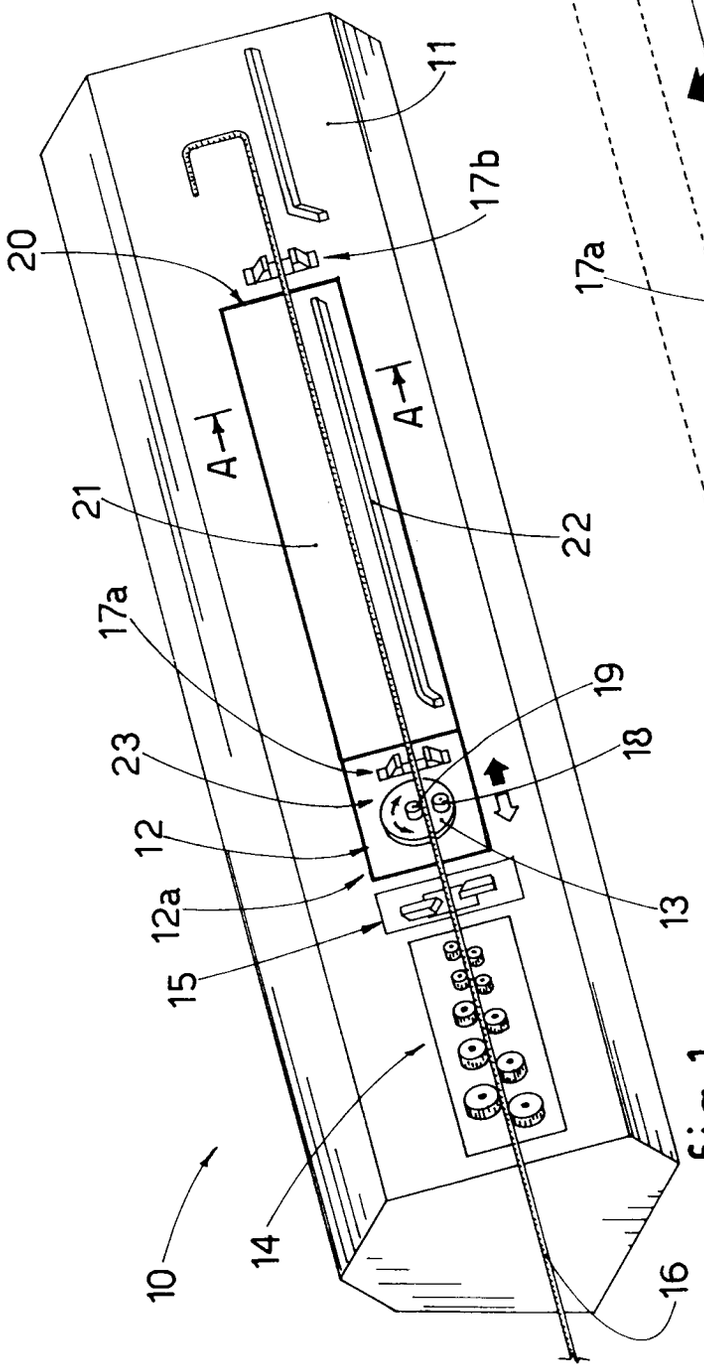
10
11
12
12a
13
14
15
16
17a
17b
18
19
20
21
22
23
A
A

fig.1

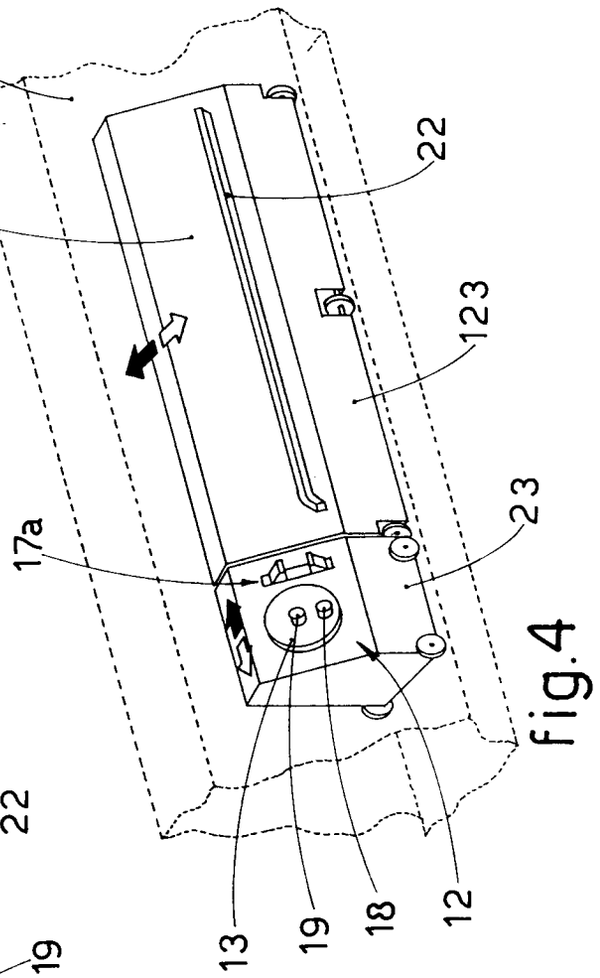
11
12
13
17a
18
19
21
22
23
123

fig.4

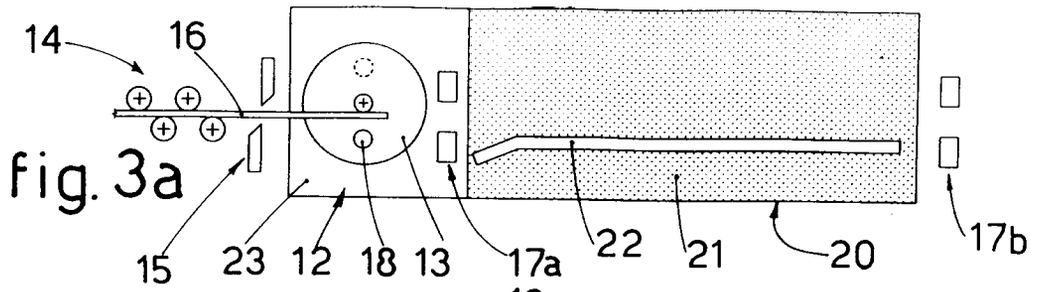

fig. 3a

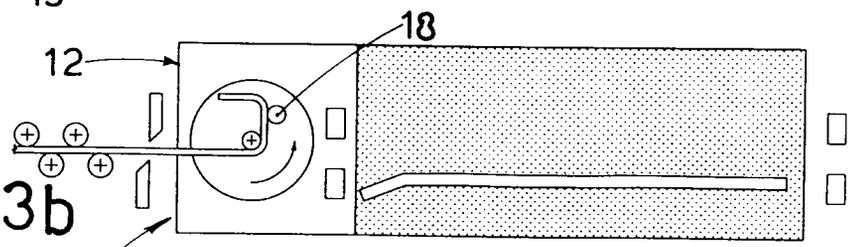

fig. 3b

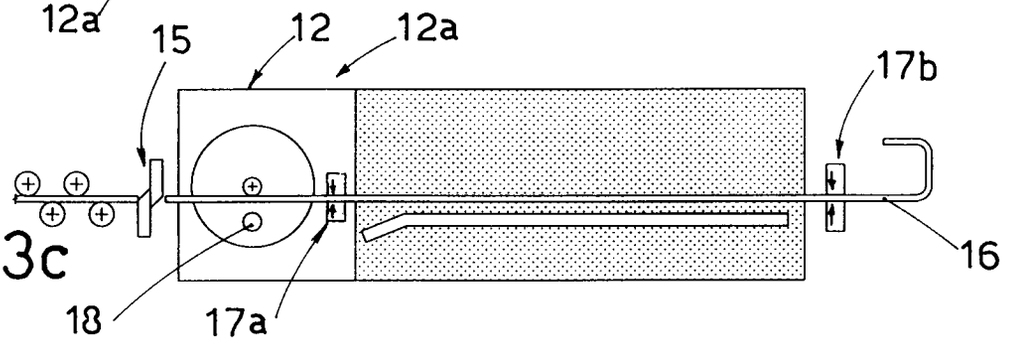

fig. 3c

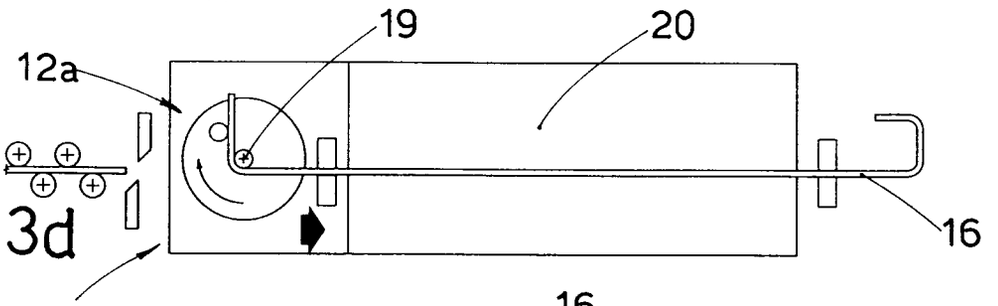

fig. 3d

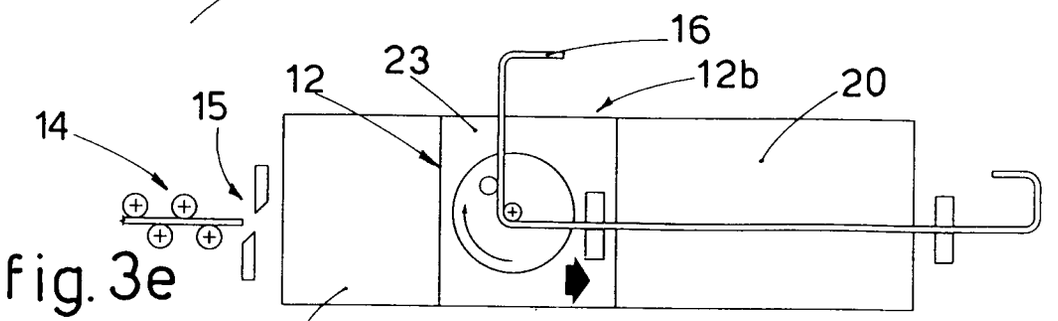

fig. 3e

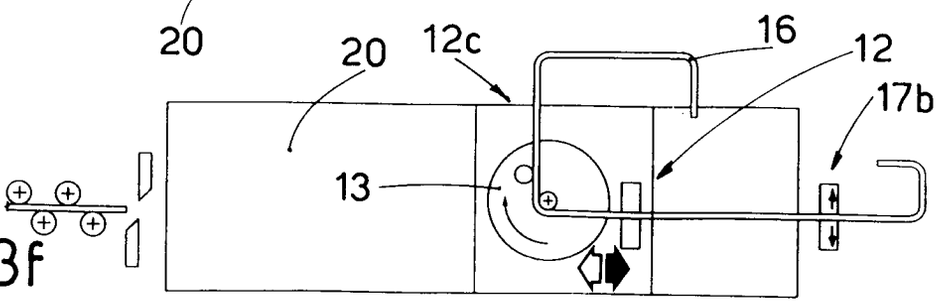

fig. 3f

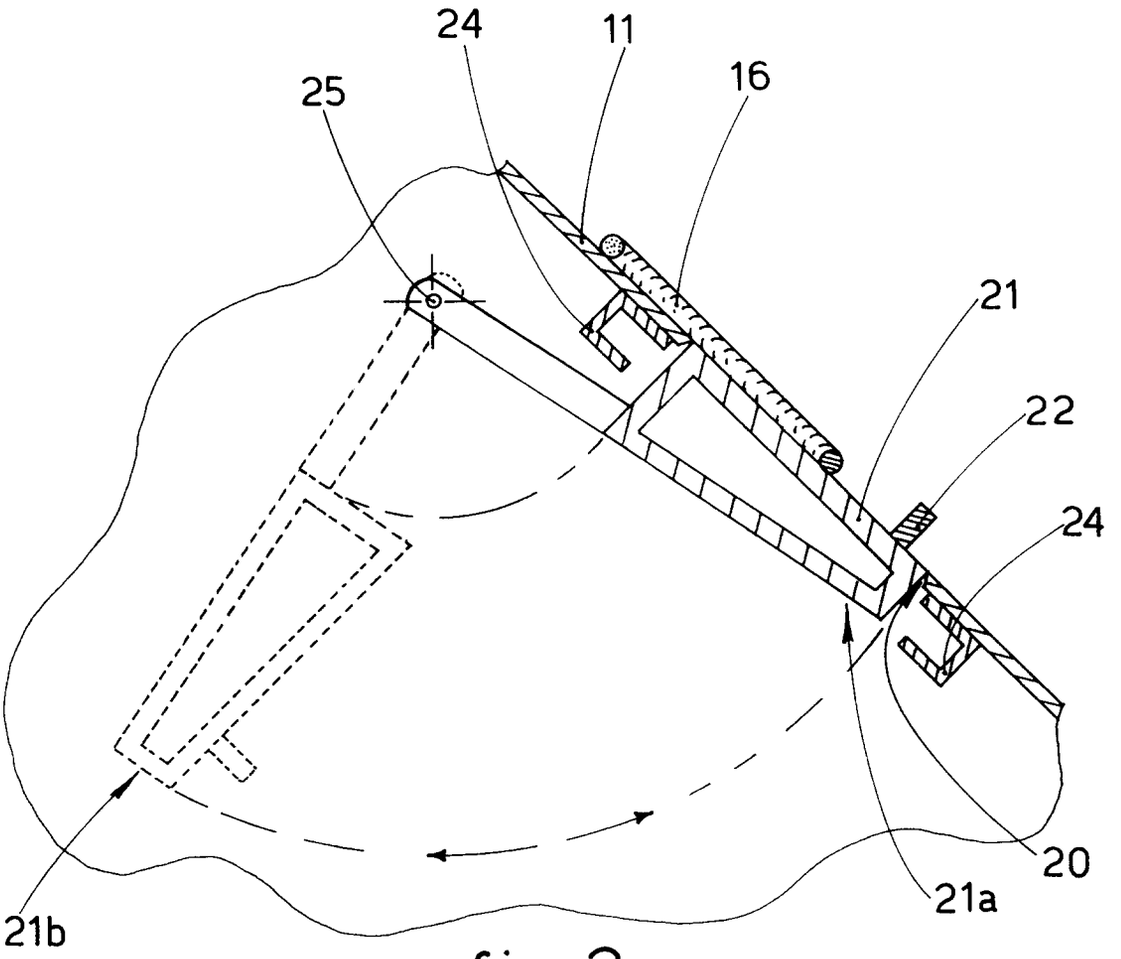

fig. 2

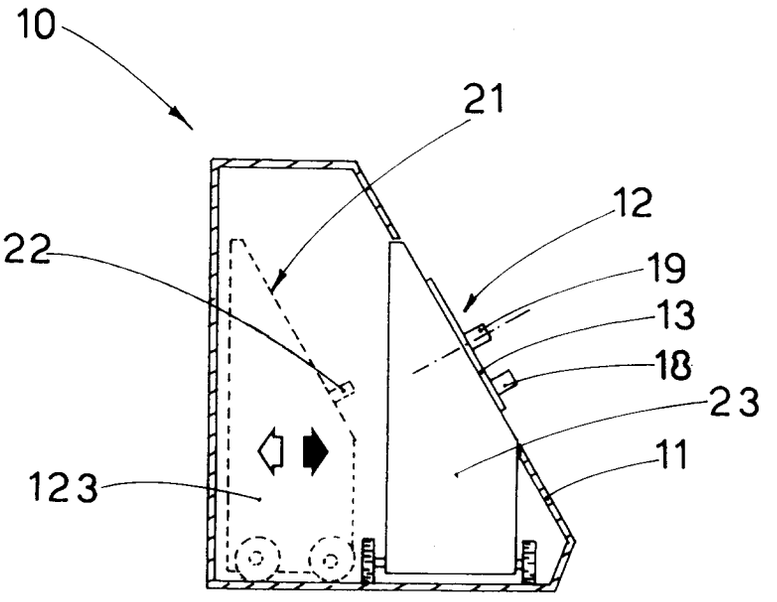

fig. 5

European Patent Office

EUROPEAN SEARCH REPORT

Application Number
EP 98 10 9427

DOCUMENTS CONSIDERED TO BE RELEVANT

Category	Citation of document with indication, where appropriate, of relevant passages	Relevant to claim	CLASSIFICATION OF THE APPLICATION (Int.Cl.6)
D,A	DE 39 19 607 A (RUHL HEINZ) 3 January 1991 * column 3, line 10 - column 4, line 19; figures *	1-11	B21D11/12 B21F1/00
A	DE 195 17 041 A (MUHR & BENDER) 26 September 1996 * column 4, line 15 - column 6, line 56; figures *	1-9,11	
D,A	EP 0 715 907 A (PEDDINGHAUS CARL ULLRICH DR) 12 June 1996 * abstract; figures *	1-3,5,6, 11,12	
A	PATENT ABSTRACTS OF JAPAN vol. 008, no. 057 (M-283), 15 March 1984 & JP 58 209424 A (MITSUI ZOSEN KK), 6 December 1983 * abstract *		
D,A	DE 94 06 880 U (PROGRESS AG) 7 July 1994		

TECHNICAL FIELDS SEARCHED (Int.Cl.6)

B21D
B21F

The present search report has been drawn up for all claims

Place of search	Date of completion of the search	Examiner
THE HAGUE	12 October 1998	Barrow, J

CATEGORY OF CITED DOCUMENTS

X : particularly relevant if taken alone
Y : particularly relevant if combined with another document of the same category
A : technological background
O : non-written disclosure
P : intermediate document

T : theory or principle underlying the invention
E : earlier patent document, but published on, or after the filing date
D : document cited in the application
L : document cited for other reasons

& : member of the same patent family, corresponding document

EPO FORM 1503 03.82 (P04C01)